PASTERNACK
an INFINITE brand



Indoor DAS Ceiling Omni Antenna, 4.5 dBi, 698 MHz - 4200 MHz, 4 x N-Female, Low PIM

Antennas Technical Data Sheet PE51247

Features

- Indoor distribution of 5G, LTE, GSM/CDMA
- In-building public or private networks
- LPWAN, LoRA, LTE-M, NB-IoT, IoT, M2M applications
- DAS (Distributed Antenna Systems)

Applications

- Low Passive Intermodulation (PIM) <-153 dBc @ 2x20W
- Vertical Polarization
- Low return loss, stable performance
- 4 x N-Female connector
- Covers 5G frequency bands including 600 MHz and extended CBRS

Description

Pasternack's Indoor DAS Ceiling Omni Antenna PE51247 is in stock and ready to ship the same-day of order. The PE51247 indoor ceiling omni antenna comes with 4.5dBi gain and 4 x N-female connectors. This indoor DAS ceiling omni antenna has a wide band frequency range from 698MHz to 4200MHz. The 4 port capabilities increase the 5G data speeds up to 4 x that of a single antenna. Pasternack's Low PIM (low internal noise) 4xN female increases the throughput, data speeds, quality of connection and allows more users to connect to the antenna.

Our omni antenna specialists are ready and available to answer any questions you may have on the PE51247 indoor DAS ceiling omni antenna. The 4.5dBi ceiling omni antenna low profile designs allow for seamless installation indoors without creating eyesores or potential interference with indoor personnel. These low PIM antennas have low loss pigtails that allows for installation flexibility.

Contact Pasternack's expert technical support for assistance with the indoor DAS ceiling omni antenna or any Antenna. Our knowledgeable sales team simplifies the purchasing process and ensures that your ceiling Omni antenna will be exact to specification.

The omni antenna PE51247 from Pasternack provides a higher quality connection and improved longevity. Order your 4-port low PIM (low noise) Indoor DAS Ceiling Omni Antenna PE51247 from Pasternack today. There is no MOQ (minimum order quantity) and the product ships same day from our warehouse.

Configuration

Design	Ceiling
Band Type	Wide
Radiation Pattern	Omni Directional
Polarization	Vertical/Horizontal
Connector Type	N Female
Interface 2	N Female
Interface 3	N Female
Interface 4	N Female
Number of Ports	4

Electrical Specifications

Description	Minimum	Typical	Maximum	Units
Frequency Range	698		4,000	MHz
Input VSWR			1.8:1	
Impedance		50		Ohms

Click the following link (or enter part number in "SEARCH" on website) to obtain additional part information including price, inventory and certifications: Indoor DAS Ceiling Omni Antenna, 4.5 dBi, 698 MHz - 4200 MHz, 4 x N-Female, Low PIM PE51247

Pasternack Enterprises, Inc. • P.O. Box 16759, Irvine, CA 92623
Phone: (866) 727-8376 or (949) 261-1920 • **Fax:** (949) 261-7451
Sales@Pasternack.com • Techsupport@Pasternack.com

© 2020 Pasternack Enterprises All Rights Reserved

PASTERNACK
an INFINITE brand



Indoor DAS Ceiling Omni Antenna, 4.5 dBi, 698 MHz - 4200 MHz, 4 x N-Female, Low PIM

Antennas Technical Data Sheet PE51247

Gain	3	4.5	dBi
Input Power		50	Watts
Passive Intermodulation 3rd order, 2 x 20 W		-153	dBc

Specifications by Band

Description	Band 1	Band 2	Band 3	Band 4	Band 5	Units
Range	0.698 to 0.96	1.71 to 2.7	3.3 to 4			GHz
Gain	3	3.5	4.5			dBi
Port to Port Isolation	16	20	25			dB
Horizontal Beam Width	360	360	360			Degrees
Vertical Beam Width	90	85	45			Degrees
VSWR Max	1.8:1	1.8:1	1.8:1			

Mechanical Specifications

Radome Material	ABS
Size	
Overall Length	14.1732 in [360 mm]
Width	14.1732 in [360 mm]
Height	0.944882 in [24 mm]
Weight	9.92 lbs [4.5 kg]

Environmental Specifications

Temperature	
Operating Range	-55 to +60 deg C
Humidity	<95

Compliance Certifications (see product page for current document)

Plotted and Other Data

Notes:

Click the following link (or enter part number in “SEARCH” on website) to obtain additional part information including price, inventory and certifications: Indoor DAS Ceiling Omni Antenna, 4.5 dBi, 698 MHz - 4200 MHz, 4 x N-Female, Low PIM PE51247

Pasternack Enterprises, Inc. • P.O. Box 16759, Irvine, CA 92623
Phone: (866) 727-8376 or (949) 261-1920 • **Fax:** (949) 261-7451
Sales@Pasternack.com • Techsupport@Pasternack.com

© 2020 Pasternack Enterprises All Rights Reserved

PASTERNACK
an INFINITE brand



Indoor DAS Ceiling Omni Antenna, 4.5 dBi, 698 MHz - 4200 MHz, 4 x N-Female, Low PIM

Antennas Technical Data Sheet PE51247

Indoor DAS Ceiling Omni Antenna, 4.5 dBi, 698 MHz - 4200 MHz, 4 x N-Female, Low PIM from Pasternack Enterprises has same day shipment for domestic and International orders. Our RF, microwave and millimeter wave products maintain a 99.4% availability and are part of the broadest selection in the industry.

Click the following link (or enter part number in “SEARCH” on website) to obtain additional part information including price, inventory and certifications: Indoor DAS Ceiling Omni Antenna, 4.5 dBi, 698 MHz - 4200 MHz, 4 x N-Female, Low PIM PE51247

URL: https://www.pasternack.com/5-dbi-wide-band-ceiling-antenna-698-4000-mhz-n-type-female-connector-pe51247-p.aspx

The information contained in this document is accurate to the best of our knowledge and representative of the part described herein. It may be necessary to make modifications to the part and/or the documentation of the part, in order to implement improvements. Pasternack reserves the right to make such changes as required. Unless otherwise stated, all specifications are nominal. Pasternack does not make any representation or warranty regarding the suitability of the part described herein for any particular purpose, and Pasternack does not assume any liability arising out of the use of any part or documentation.

Pasternack Enterprises, Inc. • P.O. Box 16759, Irvine, CA 92623
Phone: (866) 727-8376 or (949) 261-1920 • **Fax:** (949) 261-7451
Sales@Pasternack.com • Techsupport@Pasternack.com

© 2020 Pasternack Enterprises All Rights Reserved

PE51247 CAD Drawing

Indoor DAS Ceiling Omni Antenna, 4.5 dBi, 698 MHz - 4200 MHz, 4 x N-Female, Low PIM

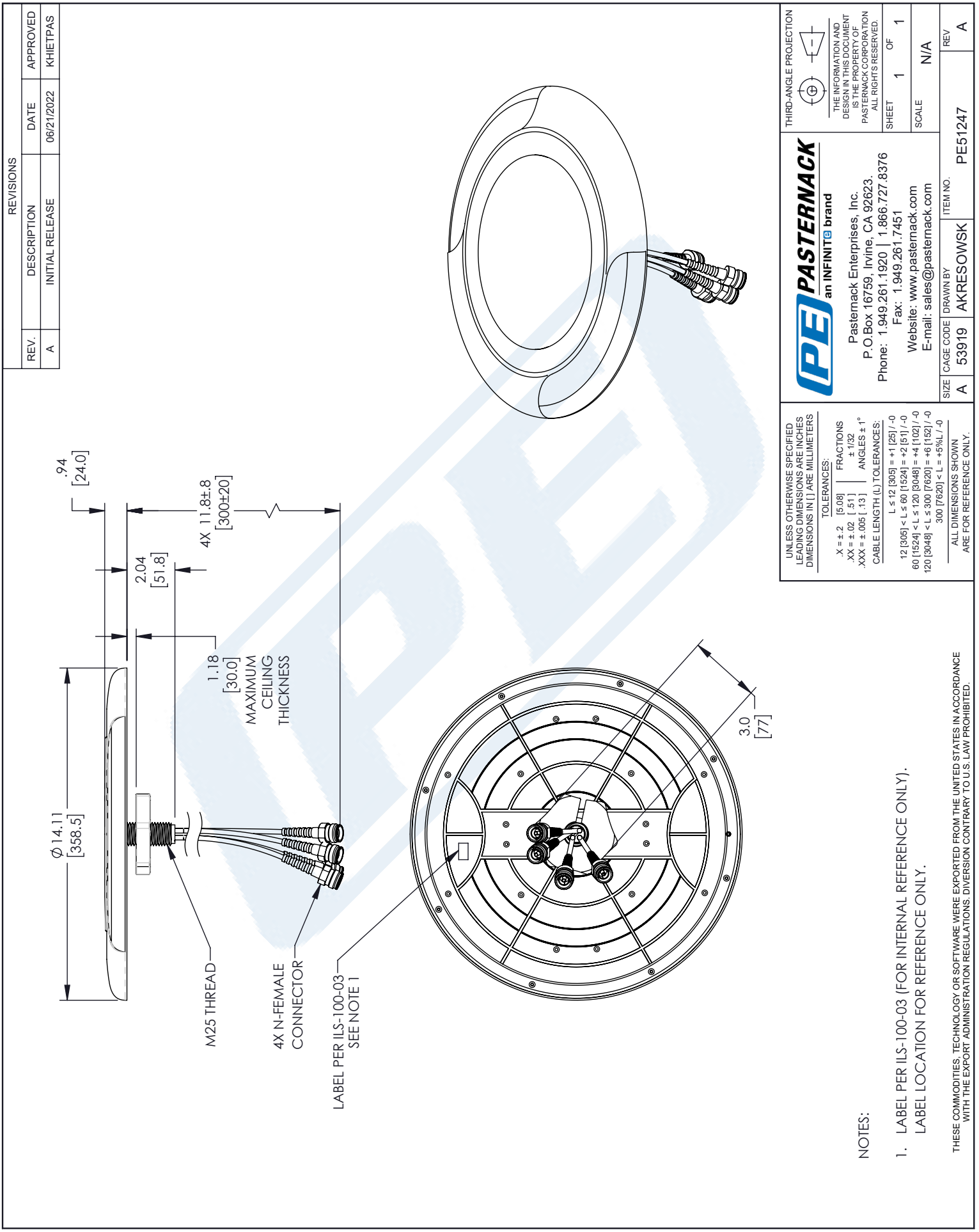

© 2020 Pasternack Enterprises All Rights Reserved