PASTERNACK
an INFINITE brand



2400-2500, 3300-3800, 5150-7125 MHz Flat Panel MIMO Antenna, 6 dBi Gain, 4 N Type Male Connectors

Antennas Technical Data Sheet PEANFP1041

Features

- N Type Male Connector
- 4 x Vertical Polarization
- 4x4 MIMO Functionality
- Outdoor Rated Flat Panel Antenna
- 2.4 GHz, 3 GHz, 5 GHz, 6 GHz Wi-Fi Bands
- 6 dBi gain

Applications

- Infotainment systems, Routers, Wi-Fi hotspots, HD video transmission, Gateways, Dash cameras, Public transportation
- Connected cars or self-driving cars, Fleet management, Logistics
- Public Safety Networks
- CBRS Networks
- Zigbee, Bluetooth, Wi-Fi

Description

The PEANFP1041 Wi-Fi 6e Antenna from Pasternack's is a high performance directional antenna designed for the 2400 MHz to 7125 MHz bands and is available to ship same day. It is a UV protected, outdoor rated antenna with directional pattern. The PEANFP1041 is ideally suited for 802.11 protocols including 802.11ax as well as Zigbee, Bluetooth and is 4x4 MIMO capable.

The Pasternack's high performance PEANFP1041 is a rugged antenna providing broad coverage, low latency, increased network capacity and 6 dBi gain. This 4 port N Male directional antenna is suitable for commercial radios and access points in public and private networks that are equipped with N Type connectors.

This Wi-Fi 6e PEANFP1041 antenna with 4 N Male connectors, as well as our wide selection of superior quality RF parts, ships same day. Contact our knowledgeable and friendly technical support and sales staff for your answers on antennas or other Pasternack's products.

Configuration

Design	Flat Panel
Application Band	Wi-Fi 6E
Band Type	Multi
Radiation Pattern	Directional
Polarization	Vertical
Cable Type	RG58/U
Cable Length	36 in [914.4 mm]
Connector Type	N Male
Number of Ports	4

Electrical Specifications

Description	Minimum	Typical	Maximum	Units
Frequency Range	2,400		7,125	MHz
Input VSWR			2:1	
Impedance		50		Ohms
Input Power			20	Watts

Click the following link (or enter part number in "SEARCH" on website) to obtain additional part information including price, inventory and certifications: 2400-2500, 3300-3800, 5150-7125 MHz Flat Panel MIMO Antenna, 6 dBi Gain, 4 N Type Male Connectors PEANFP1041

Pasternack Enterprises, Inc. • P.O. Box 16759, Irvine, CA 92623
Phone: (866) 727-8376 or (949) 261-1920 • **Fax:** (949) 261-7451
Sales@Pasternack.com • Techsupport@Pasternack.com

© 2020 Pasternack Enterprises All Rights Reserved

PASTERNACK
an INFINITE brand



2400-2500, 3300-3800, 5150-7125 MHz Flat Panel MIMO Antenna, 6 dBi Gain, 4 N Type Male Connectors

Antennas Technical Data Sheet PEANFP1041

Specifications by Band

Description	Band 1	Band 2	Band 3	Band 4	Band 5	Units
Range	2.4 to 2.5	3.3 to 3.8	5.15 to 7.125			GHz
Gain	6	6	6.5			dBi
Horizontal Beam Width	120	120	120			Degrees
Vertical Beam Width	60	60	55			Degrees

Mechanical Specifications

Radome Material	UV Resistant ABS

Size

Overall Length	11.41 in [289.81 mm]
Width	7.2 in [182.88 mm]
Height	2 in [50.8 mm]
Weight	1.724 lbs [781.99 g]
Color	White

Environmental Specifications

Temperature

Operating Range	-40 to +70 deg C
Wind Loading	124 MPH [199.56 KPH]
Humidity	5 to 95

Compliance Certifications (see product page for current document)

Plotted and Other Data

Notes:

Click the following link (or enter part number in “SEARCH” on website) to obtain additional part information including price, inventory and certifications: 2400-2500, 3300-3800, 5150-7125 MHz Flat Panel MIMO Antenna, 6 dBi Gain, 4 N Type Male Connectors PEANFP1041

Pasternack Enterprises, Inc. • P.O. Box 16759, Irvine, CA 92623
Phone: (866) 727-8376 or (949) 261-1920 • **Fax:** (949) 261-7451
Sales@Pasternack.com • Techsupport@Pasternack.com

© 2020 Pasternack Enterprises All Rights Reserved

PASTERNACK
an INFINITE brand



2400-2500, 3300-3800, 5150-7125 MHz Flat Panel MIMO Antenna, 6 dBi Gain, 4 N Type Male Connectors

Antennas Technical Data Sheet PEANFP1041

2400-2500, 3300-3800, 5150-7125 MHz Flat Panel MIMO Antenna, 6 dBi Gain, 4 N Type Male Connectors from Pasternack Enterprises has same day shipment for domestic and International orders. Our RF, microwave and millimeter wave products maintain a 99.4% availability and are part of the broadest selection in the industry.

Click the following link (or enter part number in “SEARCH” on website) to obtain additional part information including price, inventory and certifications: 2400-2500, 3300-3800, 5150-7125 MHz Flat Panel MIMO Antenna, 6 dBi Gain, 4 N Type Male Connectors PEANFP1041

URL: https://www.pasternack.com/2400-2500-3300-3800-5150-7125-mhz-flat-panel-mimo-antenna-6-dbi-gain-4-n-type-male-connectors-peanfp1041-p.aspx

The information contained in this document is accurate to the best of our knowledge and representative of the part described herein. It may be necessary to make modifications to the part and/or the documentation of the part, in order to implement improvements. Pasternack reserves the right to make such changes as required. Unless otherwise stated, all specifications are nominal. Pasternack does not make any representation or warranty regarding the suitability of the part described herein for any particular purpose, and Pasternack does not assume any liability arising out of the use of any part or documentation.

Pasternack Enterprises, Inc. • P.O. Box 16759, Irvine, CA 92623
Phone: (866) 727-8376 or (949) 261-1920 • **Fax:** (949) 261-7451
Sales@Pasternack.com • Techsupport@Pasternack.com

© 2020 Pasternack Enterprises All Rights Reserved

© 2020 Pasternack Enterprises All Rights Reserved

PEANFP1041 REV 1

REVISION					
ZONE	REV	DESCRIPTION	DATE	CHANGED BY	APPROVED
	B	REVISED PER ECO 12479	12/12/2022	DMAY	KHIETPAS

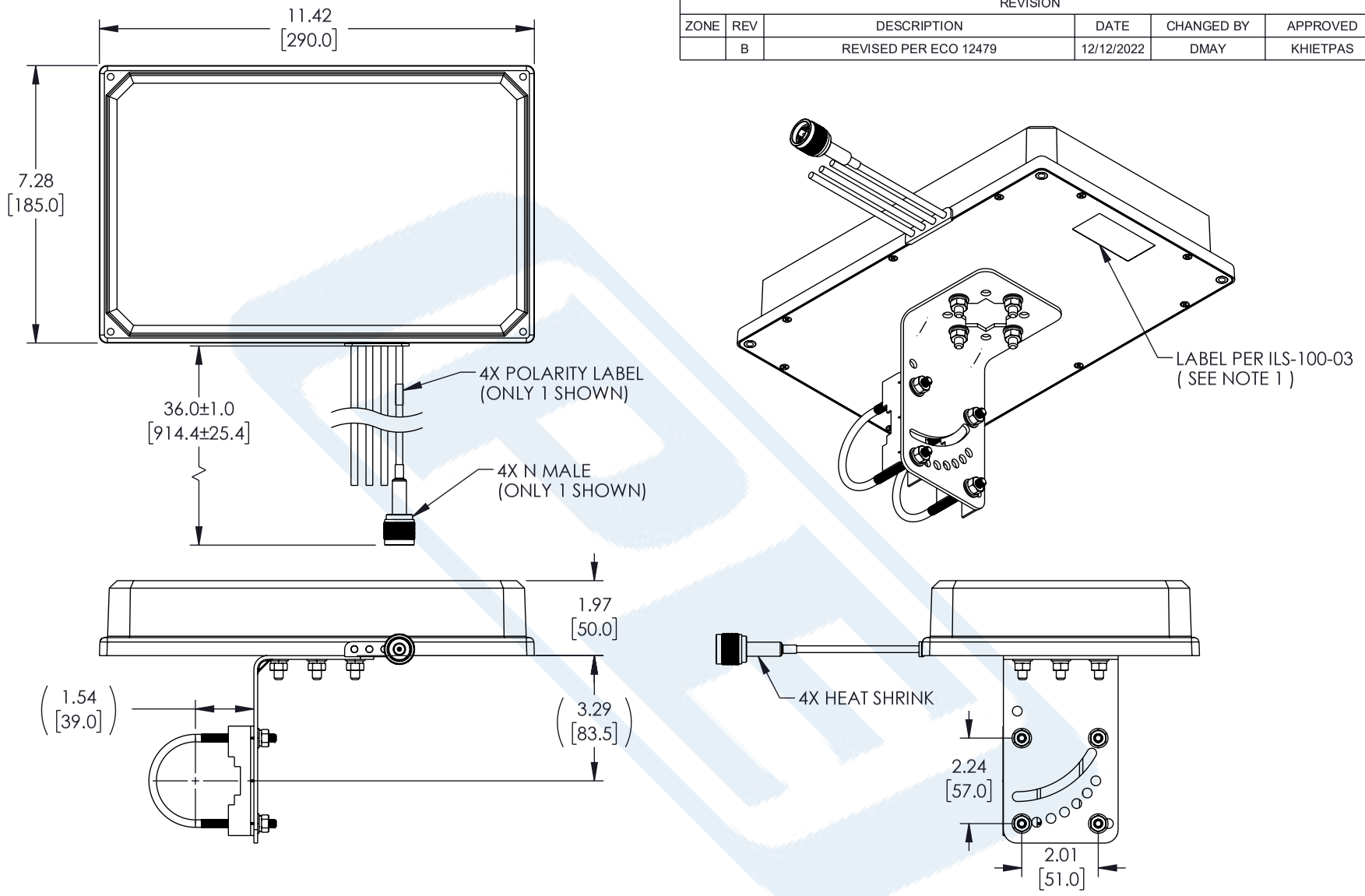

NOTES:

1. LABEL PER ILS-100-03 (FOR INTERNAL USE ONLY).
 LABEL LOCATION SHOWN IS APPROXIMATE.

REGULATORY COMPLIANCE:

EU RoHS DIRECTIVE (MOST RECENT RELEASED VERSION).

THE INFORMATION CONTAINED IN THIS DRAWING IS THE SOLE PROPERTY OF INFINITE ELECTRONICS, INC. ANY REPRODUCTION IN PART OR WHOLE WITHOUT THE WRITTEN PERMISSION OF INFINITE ELECTRONICS, INC. IS PROHIBITED.
THESE COMMODITIES, TECHNOLOGY OR SOFTWARE WERE EXPORTED FROM THE UNITED STATES IN ACCORDANCE WITH THE EXPORT ADMINISTRATION REGULATIONS. DIVERSION CONTRARY TO U.S. LAW PROHIBITED.

UNLESS OTHERWISE SPECIFIED
LEADING DIMENSIONS ARE INCHES
DIMENSIONS IN [ ] ARE MILLIMETERS

TOLERANCES:

.X = ±.2 [5]
.XX = ±.02 [.5]
.XXX = ±.005 [.13]
FRACTIONS ± 1/32
ANGLES ± 1°

CABLE LENGTH TOLERANCES:

≤12 [305] = +1 [25] / -0
>12 [305] ≤ 60 [1524] = +2 [51] / -0
>60 [1524] ≤ 120 [3048] = +4 [102] / -0
>120 [3048] ≤ 300 [7620] = +6 [152] / -0
>300 [7620] = +5% / -0

ALL DIMENSIONS ARE FOR REFERENCE ONLY AND SUBJECT TO CHANGE WITHOUT NOTICE.

PASTERNACK® an INFINITE® brand

Website: www.Pasternack.com
Phone: 1.866.727.8376 | 1.949.261.1920

INTERPRET ALL DIMENSIONS AND TOLERANCES PER ASME Y14.5

SCALE	SHEET
NONE	1 OF 1

DESCRIPTION

2400-2500 / 3300-3800 / 5150-7125MHZ 6 / 6 / 6.5 DBI 4 LEADS MIMO PANEL ANTENNA, POLE MOUNT, N MALE

SIZE	CAGE CODE	DRAWN BY	ITEM NO.	REV
A	53919	PSRINIVAS	PEANFP1041	B

T-Rev.D2

PEANFP1041 CAD Drawing

2400-2500, 3300-3800, 5150-7125 MHz Flat Panel MIMO Antenna, 6 dBi Gain, 4 N Type Male Connectors