Jun.1.2024 Copyright 2024 HIROSE ELECTRIC CO., LTD. All Rights Reserved.
In case of consideration for using Automotive equipment / device which demand high reliability, kindly contact our sales window correspondents.

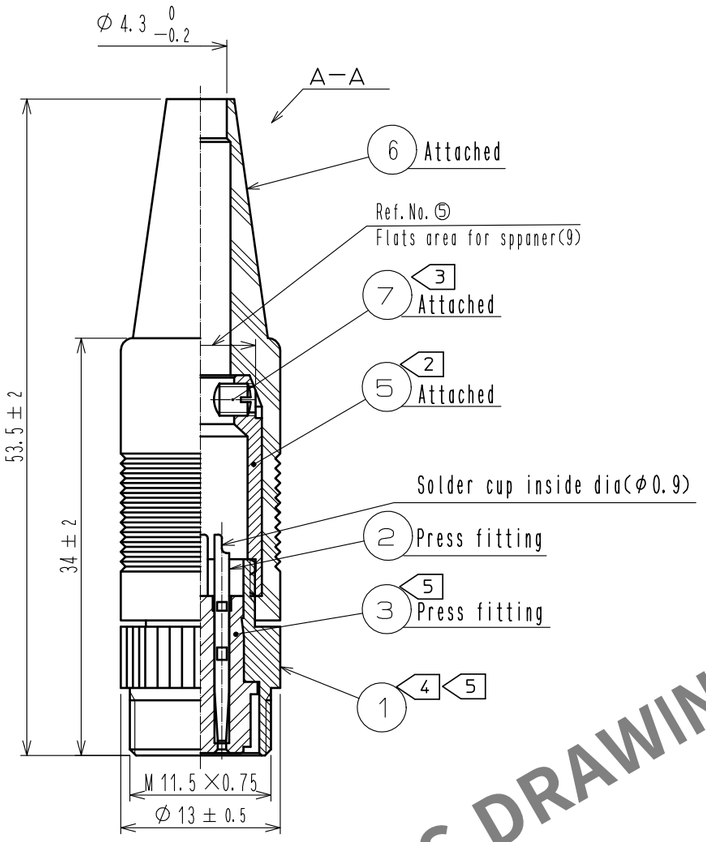

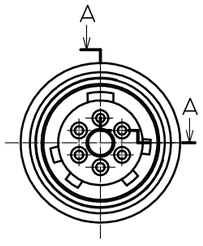

The contact arrangements
from the mating face

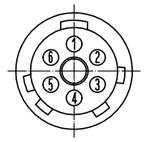

Appearance of Mating plug connector
(as an example) (1:1)

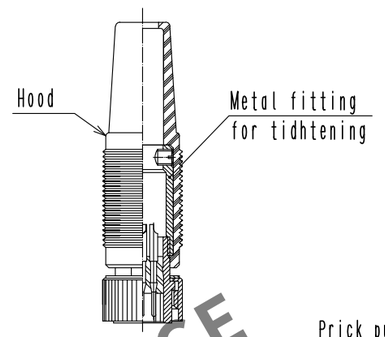

External view of
only Ref. No. ①, ② and ③.

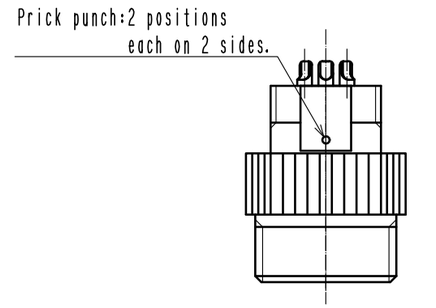

HRS DRAWING FOR REFERENCE

Notes 1 Applicable cmetal clamper: SR30-PCCL103-0266-5-00)
2 The recommended clamp torque of ref. No. ⑤ : 1.5~2N・m.
3 The recommended clamp torque of ref. No. ⑦ : 0.1~0.15N・m.
4 Apply Loctite 243, HENKEL JAPAN or equivalent to the threaded portion of ref. No. ① and ⑦ in order to prevent loosening.
5 Rotation torque resistance of ref. NO. ① and No. ③ are approx. 0.7 N・m.
Do not rotate Hood and Metal fitting for tidhtening with the plug mated condition.
6 Rotation examples of ref. No. ① and ⑤ are shown.
7 Applicable tools
Claimping tool for SR30-P : SR30-10PE-TCCL150-0001-8-00)
8 The cable pull and twisting strength and other characteristics may differ, deopending on the cable structure, please confirm before the use. Also, please confirm the workability in advance, as it may be tight when passING the cable through the part No. ⑥ bushing.

NO.	MATERIAL	FINISH , REMARKS	NO.	MATERIAL	FINISH , REMARKS
3	Polyacetal	(White)	7	Steel	Nickel plating JIS B 1117 M2.6×0.45×3
2	Phosphor bronze	Surface plating : Gold plating 0.2μm min. Under plating : Nickel plating 3μm min.	6	Chloroprene rubber	(Black)
1	Brass	Chrome plating	5	Brass	Nickel plating

UNITS	SCALE		COUNT	DESCRIPTION OF REVISIONS	DESIGNED	CHECKED	DATE
mm	2 : 1	△0					

HIROSE ELECTRIC CO., LTD.

APPROVED	TP. KOMATSU	20221202	DRAWING NO.	EDC-005968-32-00
CHECKED	HY. KOBAYASHI	20221202	PART NO.	SR30-10JE-6S(32)
DESIGNED	HY. KISHI	20221202	CODE NO.	CL0103-0259-0-32 △0 1/1
DRAWN	KR. SUZUKI	20221130		