PASTERNACK
an INFINITE brand

2.2-5 Male Low PIM Quick Lock Connector Solder Attachment for PE-1/4SFHC, SPP-250-LLPL, SPO-250, SPF-250

RF Connectors
Technical Data Sheet

PE45677

Configuration

- Quick Lock 2.2-5 Male Connector
- 50 Ohms
- Straight Body Geometry
- Connector Interface Types: PE-1/4SFHC, SPP-250-LL-PL, SPO-250, SPF-250
- Low PIM Design

Features

- Max. Operating Frequency 6 GHz
- Excellent VSWR of 1.25:1
- PIM levels lower than -163 dBc
- Silver Plated Brass Contact

Applications

- General Purpose Test
- Wireless Communications
- Custom Cable Assemblies
- Low PIM Applications

Description

Pasternack's PE45677 2.2-5 male quick lock connector with solder/solder attachment for PE-1/4SFHC, SPP-250-LLPL, SPO-250 and SPF-250 is part of our full line of RF components available for same-day shipping. Our 2.2-5 male connector operates up to a maximum frequency of 6 GHz and offers excellent VSWR of 1.25:1. The 2.2-5 male connector also has low passive intermodulation of -163 dBc.

Our 2.2-5 male connector PE45677 datasheet specifications and drawing with dimensions are shown below in this PDF. Pasternack's broad catalog of RF, microwave and millimeter wave connectors allows designers to configure and customize their signal connections however they like. Whether the need is to provide an I/O for a board design, or simply create a custom cable assembly configuration, Pasternack has the right connector for the job. Pasternack can also expertly build your custom cable assemblies for you and ship same-day.

Electrical Specifications

Description	Minimum	Typical	Maximum	Units
Frequency Range	DC		6	GHz
VSWR			1.25:1	
Passive Intermodulation			-163	dBc
Dielectric Withstanding Voltage (AC)			750	Vrms

Performance by Frequency

Description	F1	F2	F3	F4	F5	Units
Frequency Range	DC to 3	3 to 6				GHz
VSWR, Max	1.15:1	1.25:1				

Click the following link (or enter part number in "SEARCH" on website) to obtain additional part information including price, inventory and certifications: 2.2-5 Male Low PIM Quick Lock Connector Solder Attachment for PE-1/4SFHC, SPP-250-LL-PL, SPO-250, SPF-250 PE45677

Pasternack Enterprises, Inc. • P.O. Box 16759, Irvine, CA 92623
Phone: (866) 727-8376 or (949) 261-1920 • **Fax:** (949) 261-7451
Sales@Pasternack.com • Techsupport@Pasternack.com

© 2020 Pasternack Enterprises All Rights Reserved

2.2-5 Male Low PIM Quick Lock Connector Solder Attachment for PE-1/4SFHC, SPP-250-LLPL, SPO-250, SPF-250

Mechanical Specifications

Size

Length	0.88 in [22.35 mm]
Width/Dia.	0.71 in [18.03 mm]
Weight	0.03 lbs [13.61 g]

Material Specifications

Description	Material	Plating
Contact	Brass	Silver
Insulation	PTFE	
Body	Brass	Tri-Metal
Coupling Nut	Brass	Tri-Metal
O-Ring	Silicone	

Environmental Specifications

Temperature

Operating Range	-40 to +155 deg C

Compliance Certifications (see product page for current document)

Plotted and Other Data

Notes:

Click the following link (or enter part number in “SEARCH” on website) to obtain additional part information including price, inventory and certifications: 2.2-5 Male Low PIM Quick Lock Connector Solder Attachment for PE-1/4SFHC, SPP-250-LL-PL, SPO-250, SPF-250 PE45677

Pasternack Enterprises, Inc. • P.O. Box 16759, Irvine, CA 92623
Phone: (866) 727-8376 or (949) 261-1920 • **Fax:** (949) 261-7451
Sales@Pasternack.com • Techsupport@Pasternack.com

© 2020 Pasternack Enterprises All Rights Reserved

2.2-5 Male Low PIM Quick Lock Connector Solder Attachment for PE-1/4SFHC, SPP-250-LLPL, SPO-250, SPF-250

RF Connectors
Technical Data Sheet

PE45677

2.2-5 Male Low PIM Quick Lock Connector Solder Attachment for PE-1/4SFHC, SPP-250-LLPL, SPO-250, SPF-250 from Pasternack Enterprises has same day shipment for domestic and International orders. Our RF, microwave and millimeter wave products maintain a 99.4% availability and are part of the broadest selection in the industry.

Click the following link (or enter part number in “SEARCH” on website) to obtain additional part information including price, inventory and certifications: 2.2-5 Male Low PIM Quick Lock Connector Solder Attachment for PE-1/4SFHC, SPP-250-LLPL, SPO-250, SPF-250 PE45677

URL: https://www.pasternack.com/2.2-5-male-quick-lock-pe-1-4sfhc-spp-250-llpl-connector-pe45677-p.aspx

The information contained in this document is accurate to the best of our knowledge and representative of the part described herein. It may be necessary to make modifications to the part and/or the documentation of the part, in order to implement improvements. Pasternack reserves the right to make such changes as required. Unless otherwise stated, all specifications are nominal. Pasternack does not make any representation or warranty regarding the suitability of the part described herein for any particular purpose, and Pasternack does not assume any liability arising out of the use of any part or documentation.

Pasternack Enterprises, Inc. • P.O. Box 16759, Irvine, CA 92623
Phone: (866) 727-8376 or (949) 261-1920 • **Fax:** (949) 261-7451
Sales@Pasternack.com • Techsupport@Pasternack.com

© 2020 Pasternack Enterprises All Rights Reserved

PE45677 CAD Drawing

2.2-5 Male Low PIM Quick Lock Connector Solder Attachment
for PE-1/4SFHC, SPP-250-LLPL, SPO-250, SPF-250

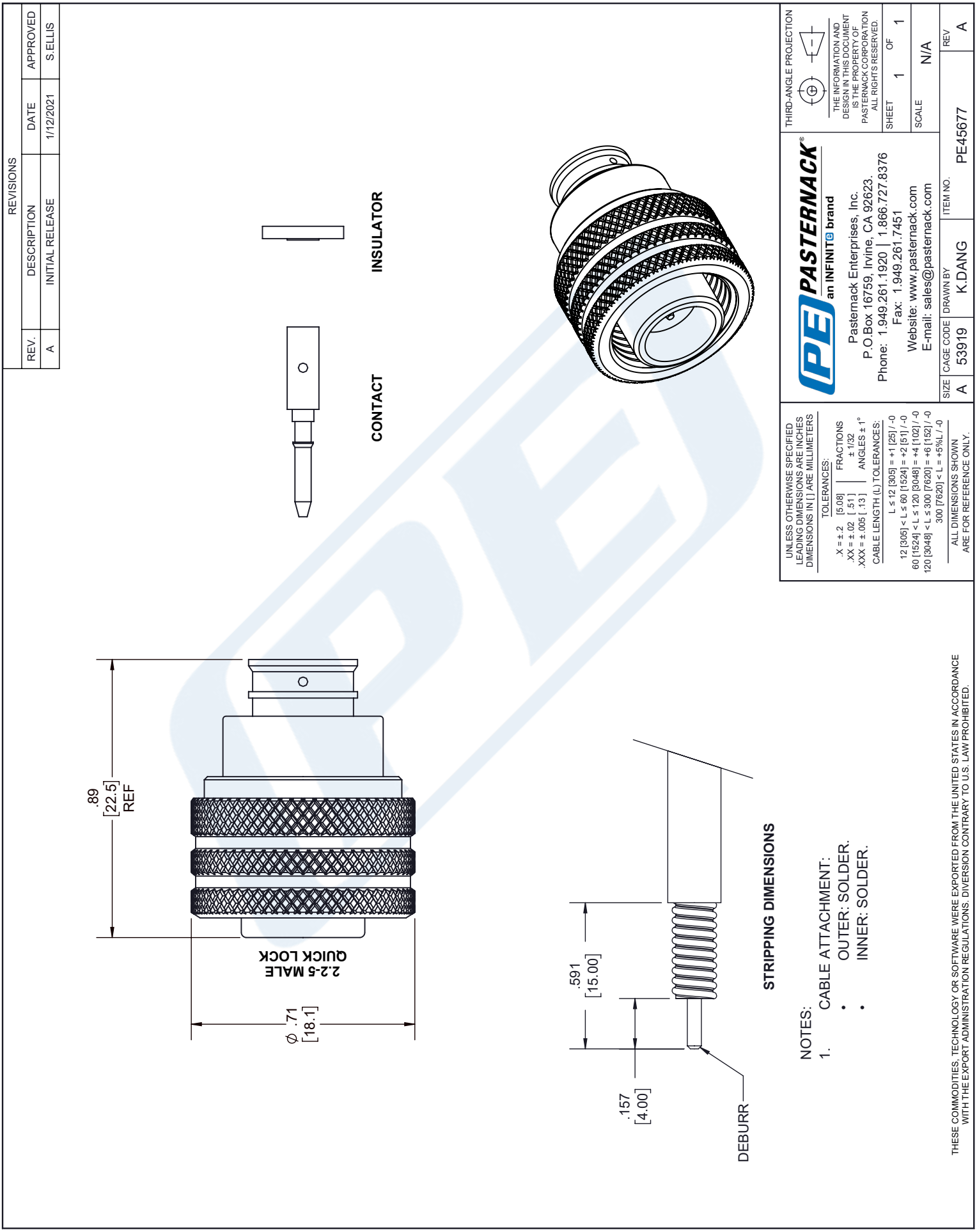

© 2020 Pasternack Enterprises All Rights Reserved