Dimensions: [mm]

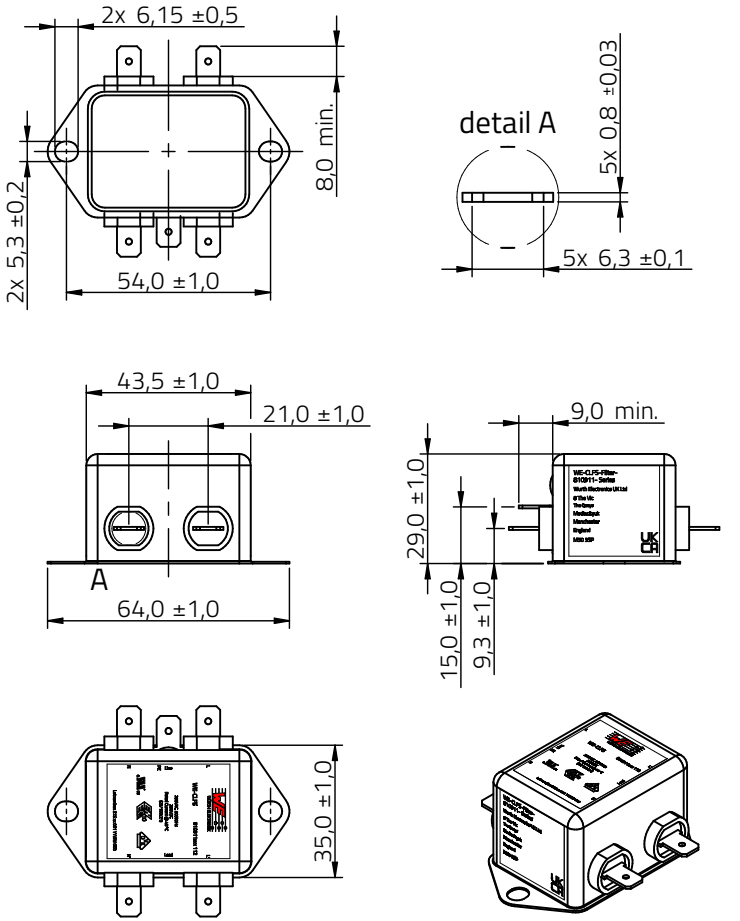

Scale - 1:2

Recommended Hole Pattern: [mm]

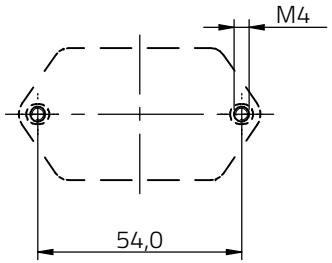

Scale - 1:2

Schematic:

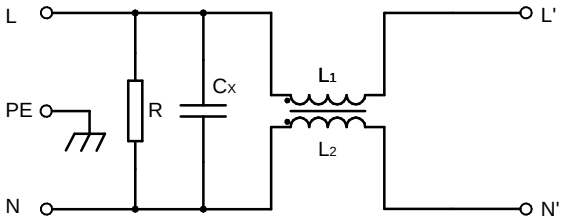

L1 = L2 = L

Electrical Properties:

Properties		Test conditions	Value	Unit	Tol.
Rated Voltage	V_R	250 V (AC), 50/60 Hz 250 V (DC)	250	V	max.
Rated Current	I_R	@ 40 °C/ ΔT< 60 K	10	A	max.
Leakage Current [1]	I_{Leak}	250 V (AC)/ 50 Hz	0	mA	typ.
DC Resistance	R_{DC}	@ 20 °C	15	mΩ	max.
Inductance	L	10 kHz/ 0.1 mA	1	mH	+50%/-30%
X2-Capacitance	C_X	1 kHz/ 1 V	0.68	µF	±10%
Discharge Resistance	R	@ 20 °C	680	kΩ	±10%
Insulation Test Voltage L->PE	$V_{T\,AC}$	50 Hz/ 2 s/ 0,5 mA	2000	V (AC)	max.
Insulation Test Voltage L->N	$V_{T\,DC}$	2 s/ 10 mA	1075	V (DC)	max.

[1] Leakage current is calculated according to IEC 60939-3. If the neutral line is interrupted, worst case leakage current could reach twice this level. There is no leakage current for DC applications.

General Information:

Operating Temperature	-25 °C up to +100 °C
Climatic Category	25/100/21
Rated Temperature $I\,T_R$	40 °C
Storage Conditions (in original packaging)	< 40 °C ; < 75 % RH
Flammability Rating	UL94 V-0
Moisture Sensitivity Level (MSL)	1
Altitude <=2000 m (above derating applies)	
Vibration resistance: Do not exceed the vibration limits given by IEC60068-2-6.	
Test conditions of Electrical Properties: +20 °C, 33 % RH if not specified differently	

Mechanical Properties:

Properties		Value	Unit	Tol.
Weight	m	71	g	typ.

RoHS COMPLIANT · REACh COMPLIANT

WÜRTH ELEKTRONIK MORE THAN YOU EXPECT

Würth Elektronik eiSos GmbH & Co. KG
EMC & Inductive Solutions
Max-Eyth-Str. 1
74638 Waldenburg
Germany
Tel. +49 (0) 79 42 945 - 0
www.we-online.com
eiSos@we-online.com

CHECKED	REVISION	DATE (YYYY-MM-DD)	GENERAL TOLERANCE	PROJECTION METHOD
SBir	001.001	2023-07-17	DIN ISO 2768-1m	

DESCRIPTION
WE-CLFS Line Filter

ORDER CODE
810911010112

BUSINESS UNIT	STATUS	PAGE
eiSos	Valid	1/7

This electronic component has been designed and developed for usage in general electronic equipment only. This product is not authorized for use in equipment where a higher safety standard and reliability standard is especially required or where a failure of the product is reasonably expected to cause severe personal injury or death, unless the parties have executed an agreement specifically governing such use. Moreover Würth Elektronik eiSos GmbH & Co KG products are neither designed nor intended for use in areas such as military, aerospace, aviation, nuclear control, submarine, transportation, transportation signal, disaster prevention, medical, public information network etc.. Würth Elektronik eiSos GmbH & Co KG must be informed about the intent of such usage before the design-in stage. In addition, sufficient reliability evaluation checks for safety must be performed on every electronic component which is used in electrical circuits that require high safety and reliability functions or performance.

Certification:

RoHS Approval	Compliant [2011/65/EU&2015/863]
REACh Approval	Conform or declared [(EC)1907/2006]
cURus Approval	E502193 [UL 60939-3/ CSA C22.2 NO. 8-13]
VDE Approval	40048805 [IEC/EN 60939-2]
ENEC 10 Approval	40048805 [IEC/EN 60939-2]
CE	Yes [for further information please see: https://www.we-online.com/katalog/de/WE-CLFS]
UKCA	Yes [for further information please see: https://www.we-online.com/katalog/de/WE-CLFS]

Mounting / Installation instructions:

- While mounting and removing, the electronic component shall be operated in voltage-free condition pursuant to the five safety rules described in the standard EN 50110-1.
- To establish a low impedance path for parasitic currents the filter housing shall have a wide connection area to the ground plane. The ground plane shall be free of paint or other isolating materials.
- The connection to the ground plane should be established with M4 screws. The tightening torque varies with the selected screw and should not exceed the limit of 5Nm.
- The protective earth connection shall be the first to be connected while installing the filter and shall be the last to be disconnected. The protective earth connection must be prepared considering the leakage current.
- The filter position is suggested to be close as possible to the application. If there are long distances between the filter and application, it is recommended to shield the cables, otherwise, the functionality might be affected.
- Keep the connection to the PE as short as possible.
- To minimize crosstalk do not place incoming and outgoing cables next to each other.
- Use short cables to minimize the parasitic effects of the setup.

Typical Attenuation:

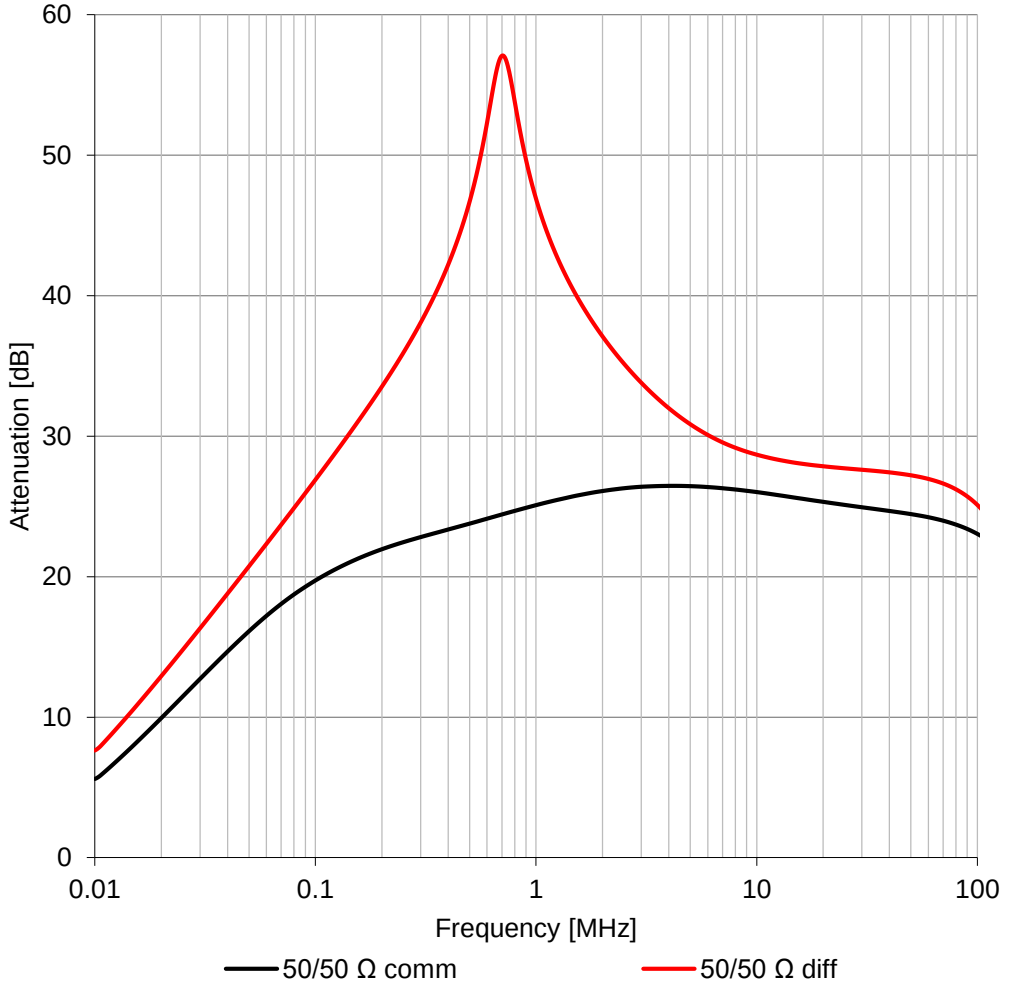

WÜRTH ELEKTRONIK
MORE THAN YOU EXPECT

Würth Elektronik eiSos GmbH & Co. KG
EMC & Inductive Solutions
Max-Eyth-Str. 1
74638 Waldenburg
Germany
Tel. +49 (0) 79 42 945 - 0
www.we-online.com
eiSos@we-online.com

CHECKED	REVISION	DATE (YYYY-MM-DD)	GENERAL TOLERANCE	PROJECTION METHOD
SBir	001.001	2023-07-17	DIN ISO 2768-1m	

DESCRIPTION
WE-CLFS Line Filter

ORDER CODE
810911010112

BUSINESS UNIT	STATUS	PAGE
eiSos	Valid	2/7

This electronic component has been designed and developed for usage in general electronic equipment only. This product is not authorized for use in equipment where a higher safety standard and reliability standard is especially required or where a failure of the product is reasonably expected to cause severe personal injury or death, unless the parties have executed an agreement specifically governing such use. Moreover Würth Elektronik eiSos GmbH & Co KG products are neither designed nor intended for use in areas such as military, aerospace, aviation, nuclear control, submarine, transportation, transportation signal, disaster prevention, medical, public information network etc.. Würth Elektronik eiSos GmbH & Co KG must be informed about the intent of such usage before the design-in stage. In addition, sufficient reliability evaluation checks for safety must be performed on every electronic component which is used in electrical circuits that require high safety and reliability functions or performance.

Test Setup:

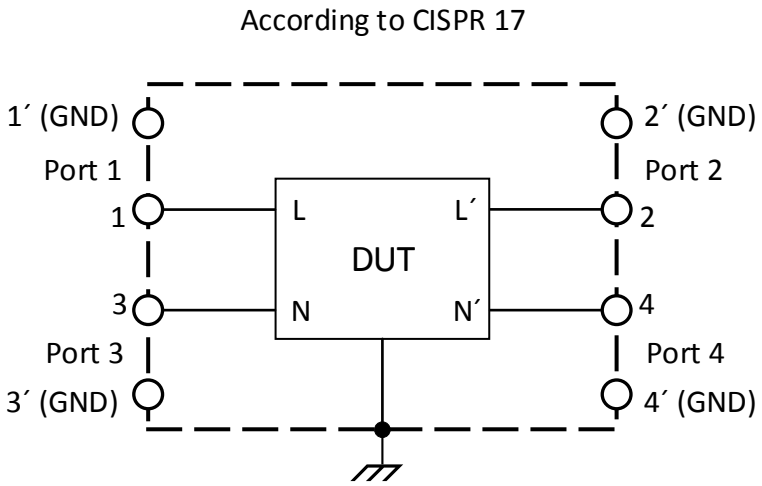

Network Analyzer: Keysight E5080A or equivalent

Derating Curve:

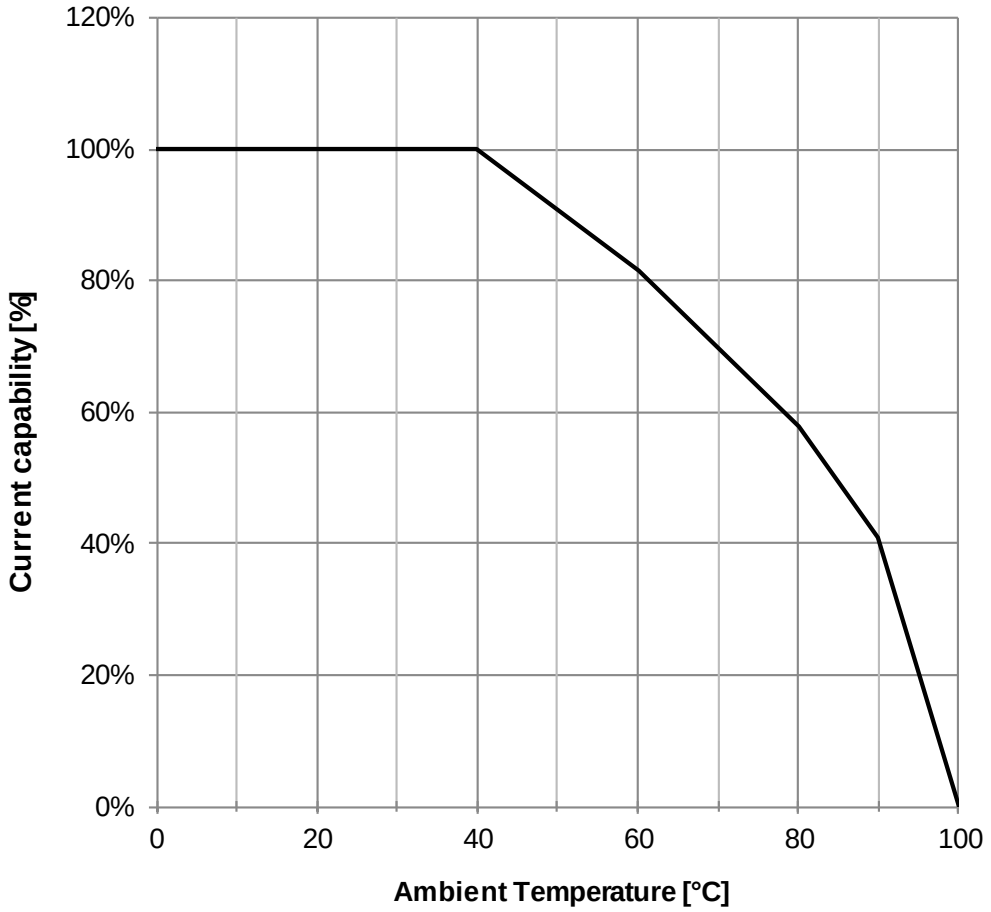

CHECKED	REVISION	DATE (YYYY-MM-DD)	GENERAL TOLERANCE	PROJECTION METHOD
SBir	001.001	2023-07-17	DIN ISO 2768-1m	

DESCRIPTION
WE-CLFS Line Filter

ORDER CODE
810911010112

BUSINESS UNIT	STATUS	PAGE
eiSos	Valid	3/7

WÜRTH ELEKTRONIK MORE THAN YOU EXPECT

Würth Elektronik eiSos GmbH & Co. KG
EMC & Inductive Solutions
Max-Eyth-Str. 1
74638 Waldenburg
Germany
Tel. +49 (0) 79 42 945 - 0
www.we-online.com
eiSos@we-online.com

This electronic component has been designed and developed for usage in general electronic equipment only. This product is not authorized for use in equipment where a higher safety standard and reliability standard is especially required or where a failure of the product is reasonably expected to cause severe personal injury or death, unless the parties have executed an agreement specifically governing such use. Moreover Würth Elektronik eiSos GmbH & Co KG products are neither designed nor intended for use in areas such as military, aerospace, aviation, nuclear control, submarine, transportation, transportation signal, disaster prevention, medical, public information network etc.. Würth Elektronik eiSos GmbH & Co KG must be informed about the intent of such usage before the design-in stage. In addition, sufficient reliability evaluation checks for safety must be performed on every electronic component which is used in electrical circuits that require high safety and reliability functions or performance.

Packaging Specification - Tray and Carton: [mm]

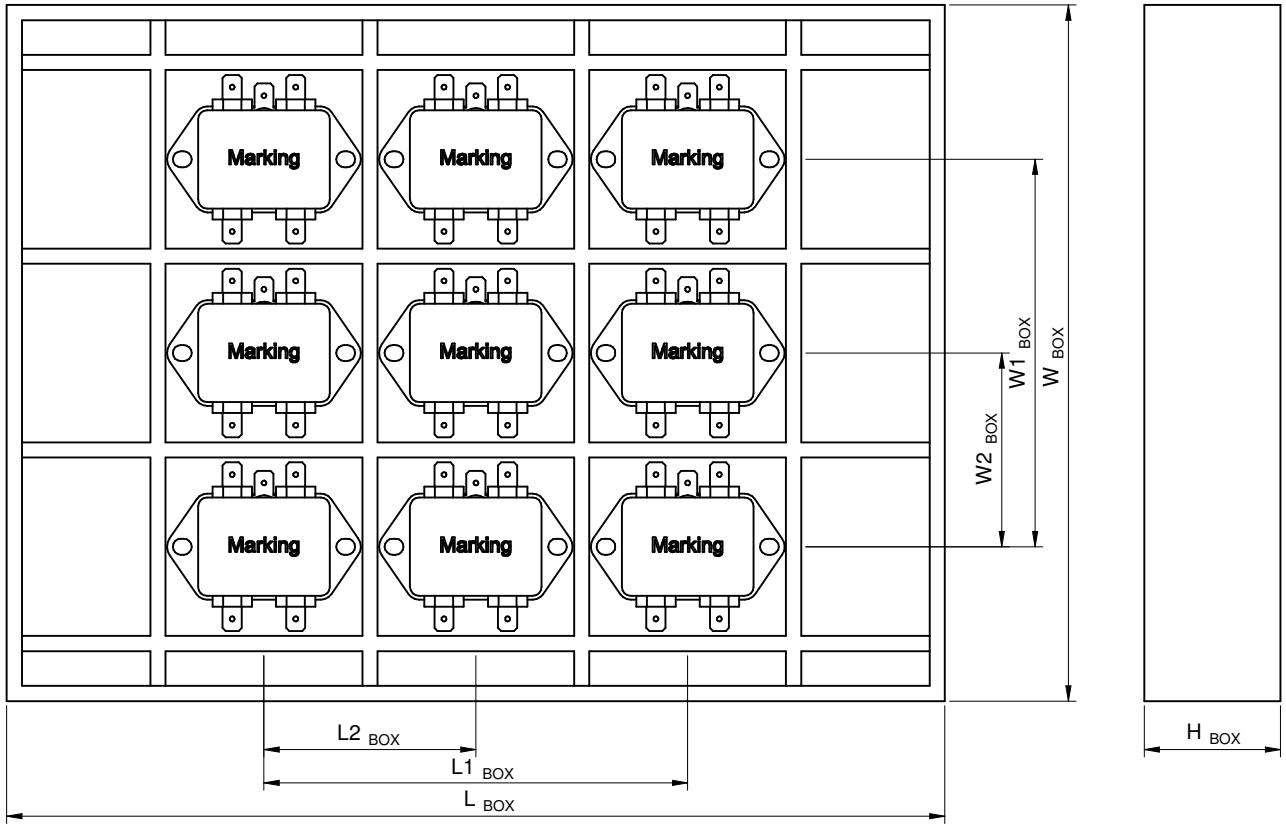

L_{BOX} (mm)	$L1_{BOX}$ (mm)	$L2_{BOX}$ (mm)	W_{BOX} (mm)	$W1_{BOX}$ (mm)	$W2_{BOX}$ (mm)	H_{BOX} (mm)	No. of EPE Foam	Packaging Unit	Material
typ.	typ.	typ.	typ.	typ.	typ.	typ.	pcs.	pcs.	
310,00	140	70	230	128	64	29	2	9	Paper

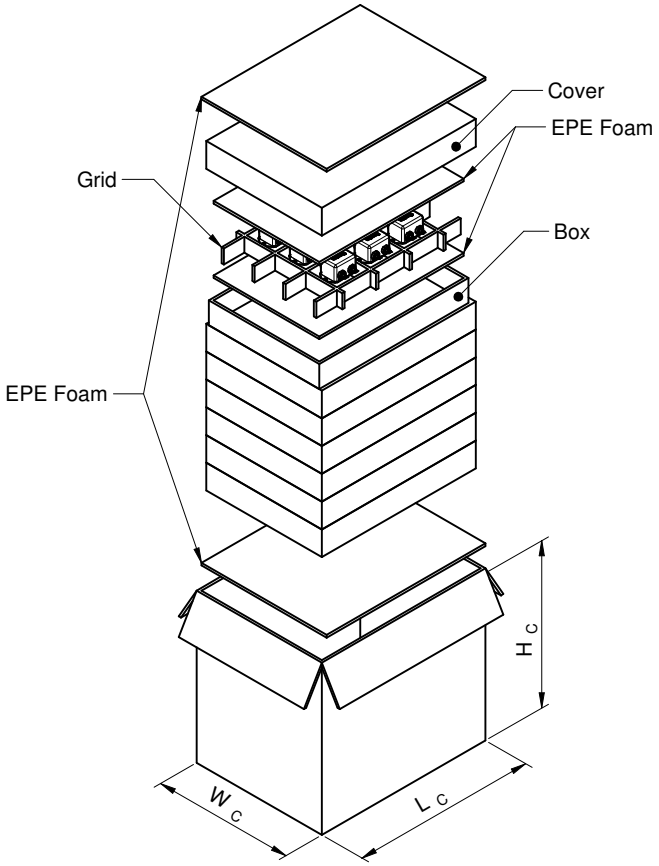

L_C (mm)	W_C (mm)	H_C (mm)	No. of box	No. of EPE foam	Packaging Unit	Material
typ.	typ.	typ.	pcs.	pcs.	pcs.	
320,00	240,00	310,00	7	2	63	Paper

RoHS COMPLIANT
REACh COMPLIANT

WÜRTH ELEKTRONIK
MORE THAN YOU EXPECT

Würth Elektronik eiSos GmbH & Co. KG
EMC & Inductive Solutions
Max-Eyth-Str. 1
74638 Waldenburg
Germany
Tel. +49 (0) 79 42 945 - 0
www.we-online.com
eiSos@we-online.com

CHECKED	REVISION	DATE (YYYY-MM-DD)	GENERAL TOLERANCE	PROJECTION METHOD
SBir	001.001	2023-07-17	DIN ISO 2768-1m	

DESCRIPTION
WE-CLFS Line Filter

ORDER CODE
810911010112

BUSINESS UNIT	STATUS	PAGE
eiSos	Valid	4/7

This electronic component has been designed and developed for usage in general electronic equipment only. This product is not authorized for use in equipment where a higher safety standard and reliability standard is especially required or where a failure of the product is reasonably expected to cause severe personal injury or death, unless the parties have executed an agreement specifically governing such use. Moreover Würth Elektronik eiSos GmbH & Co KG products are neither designed nor intended for use in areas such as military, aerospace, aviation, nuclear control, submarine, transportation, transportation signal, disaster prevention, medical, public information network etc.. Würth Elektronik eiSos GmbH & Co KG must be informed about the intent of such usage before the design-in stage. In addition, sufficient reliability evaluation checks for safety must be performed on every electronic component which is used in electrical circuits that require high safety and reliability functions or performance.

Further information

Component Libraries:

Download_IGS_810911001112

Download_STP_810911001112

Free Sample Order:

Order free samples of this article directly here!

Tutorials:

- Applications of EMC Components (PDF)
- EMC Filters (PDF)
- WE-CLFS Montageanleitung (PDF)

REDEXPERT:

Find the right Line Filter with REDEXPERT

WÜRTH ELEKTRONIK
MORE THAN YOU EXPECT

Würth Elektronik eiSos GmbH & Co. KG
EMC & Inductive Solutions
Max-Eyth-Str. 1
74638 Waldenburg
Germany
Tel. +49 (0) 79 42 945 - 0
www.we-online.com
eiSos@we-online.com

CHECKED	REVISION	DATE (YYYY-MM-DD)	GENERAL TOLERANCE	PROJECTION METHOD
SBir	001.001	2023-07-17	DIN ISO 2768-1m	

DESCRIPTION
WE-CLFS Line Filter

ORDER CODE
810911010112

BUSINESS UNIT	STATUS	PAGE
eiSos	Valid	5/7

This electronic component has been designed and developed for usage in general electronic equipment only. This product is not authorized for use in equipment where a higher safety standard and reliability standard is especially required or where a failure of the product is reasonably expected to cause severe personal injury or death, unless the parties have executed an agreement specifically governing such use. Moreover Würth Elektronik eiSos GmbH & Co KG products are neither designed nor intended for use in areas such as military, aerospace, aviation, nuclear control, submarine, transportation, transportation signal, disaster prevention, medical, public information network etc.. Würth Elektronik eiSos GmbH & Co KG must be informed about the intent of such usage before the design-in stage. In addition, sufficient reliability evaluation checks for safety must be performed on every electronic component which is used in electrical circuits that require high safety and reliability functions or performance.

Cautions and Warnings:

The following conditions apply to all goods within the product series of WE-CLFS of Würth Elektronik eiSos GmbH & Co. KG:

General:

- This electronic component was designed and manufactured for use in general electronic equipment.
- Würth Elektronik must be asked for written approval (following the PPAP procedure) before incorporating the components into any equipment in fields such as military, aerospace, aviation, nuclear control, submarine, transportation (automotive control, train control, ship control), transportation signal, disaster prevention, medical, public information network, etc. where higher safety and reliability are especially required and/or if there is the possibility of direct damage or human injury.
- Electronic components that will be used in safety-critical or high-reliability applications, should be pre-evaluated by the customer.
- The component is designed and manufactured to be used within the datasheet specified values. If the usage and operation conditions specified in the datasheet are not met, the wire insulation may be damaged or dissolved.
- Do not drop or impact the components, the component may be damaged.
- Würth Elektronik products are qualified according to international standards, which are listed in each product reliability report. Würth Elektronik does not guarantee any customer qualified product characteristics beyond Würth Elektroniks' specifications, for its validity and sustainability over time.
- The customer is responsible for the functionality of their own products. All technical specifications for standard products also apply to customer specific products.

Product specific:

Cleaning and Washing:

- Washing agents used during the production to clean the customer application might damage or change the characteristics of the component. Washing agent may have a negative effect on the long-term functionality of the product.

Storage Conditions:

- A storage of Würth Electronik products for longer than 12 months is not recommended. Within other effects, the terminals may suffer degradation, resulting in bad solderability. Therefore, all products shall be used within the period of 12 months based on the day of shipment.
- Do not expose the components to direct sunlight.
- The storage conditions in the original packaging are defined according to DIN EN 61760-2.
- The storage conditions stated in the original packaging apply to the storage time and not to the transportation time of the components.

Packaging:

- The packaging specifications apply only to purchase orders comprising whole packaging units. If the ordered quantity exceeds or is lower than the specified packaging unit, packaging in accordance with the packaging specifications cannot be ensured.

Handling:

- Violation of the technical product specifications such as exceeding the nominal rated current will void the warranty.
- Only qualified personnel should work with the electronic component including, but not limited to, work such as planning, assembly, installation, operation, repair and maintenance considering the corresponding documentation.
- The filter includes components storing an electric charge and dangerous voltage may remain at the filter terminals even after the power source has been disconnected even after five minutes.
- In case temporary voltage is applied to the unassembled filter, the filter shall be discharged after the power source has been disconnected.
- Avoid any overload or conditions that are not specified in the datasheet.
- Do not exceed the specified temperature limits.
- To maintain regular operation, the filters shall be protected within the application against inadmissible exceedance of the rated current.
- The filter leakage current specified in the data sheet merely serves as a user information. For security reasons, the maximum leakage current of the entire electrical application has to be limited. The permissible limits for your application must be acquired from the relative and applicable regulations, provisions and standards.
- The current derating must be observed. Disregarding the current derating might result in overheating and in a fire hazard as a consequence thereof.
- Due to the heavy weight of the electronic component, strong forces and high accelerations might have the effect to damage the electrical connection and will void the warranty.
- The temperature rise of the component must be taken into consideration. The operating temperature is comprised of ambient temperature and temperature rise of the component.The operating temperature of the component shall not exceed the maximum temperature specified.

These cautions and warnings comply with the state of the scientific and technical knowledge and are believed to be accurate and reliable. However, no responsibility is assumed for inaccuracies or incompleteness.

WÜRTH ELEKTRONIK
MORE THAN YOU EXPECT

Würth Elektronik eiSos GmbH & Co. KG
EMC & Inductive Solutions
Max-Eyth-Str. 1
74638 Waldenburg
Germany
Tel. +49 (0) 79 42 945 - 0
www.we-online.com
eiSos@we-online.com

CHECKED	REVISION	DATE (YYYY-MM-DD)	GENERAL TOLERANCE	PROJECTION METHOD
SBir	001.001	2023-07-17	DIN ISO 2768-1m	

DESCRIPTION
WE-CLFS Line Filter

ORDER CODE
810911010112

BUSINESS UNIT	STATUS	PAGE
eiSos	Valid	6/7

This electronic component has been designed and developed for usage in general electronic equipment only. This product is not authorized for use in equipment where a higher safety standard and reliability standard is especially required or where a failure of the product is reasonably expected to cause severe personal injury or death, unless the parties have executed an agreement specifically governing such use. Moreover Würth Elektronik eiSos GmbH & Co KG products are neither designed nor intended for use in areas such as military, aerospace, aviation, nuclear control, submarine, transportation, transportation signal, disaster prevention, medical, public information network etc.. Würth Elektronik eiSos GmbH & Co KG must be informed about the intent of such usage before the design-in stage. In addition, sufficient reliability evaluation checks for safety must be performed on every electronic component which is used in electrical circuits that require high safety and reliability functions or performance.

Important Notes

The following conditions apply to all goods within the product range of Würth Elektronik eiSos GmbH & Co. KG:

1. General Customer Responsibility

Some goods within the product range of Würth Elektronik eiSos GmbH & Co. KG contain statements regarding general suitability for certain application areas. These statements about suitability are based on our knowledge and experience of typical requirements concerning the areas, serve as general guidance and cannot be estimated as binding statements about the suitability for a customer application. The responsibility for the applicability and use in a particular customer design is always solely within the authority of the customer. Due to this fact it is up to the customer to evaluate, where appropriate to investigate and decide whether the device with the specific product characteristics described in the product specification is valid and suitable for the respective customer application or not.

2. Customer Responsibility related to Specific, in particular Safety-Relevant Applications

It has to be clearly pointed out that the possibility of a malfunction of electronic components or failure before the end of the usual lifetime cannot be completely eliminated in the current state of the art, even if the products are operated within the range of the specifications.
In certain customer applications requiring a very high level of safety and especially in customer applications in which the malfunction or failure of an electronic component could endanger human life or health it must be ensured by most advanced technological aid of suitable design of the customer application that no injury or damage is caused to third parties in the event of malfunction or failure of an electronic component. Therefore, customer is cautioned to verify that data sheets are current before placing orders. The current data sheets can be downloaded at www.we-online.com.

3. Best Care and Attention

Any product-specific notes, cautions and warnings must be strictly observed. Any disregard will result in the loss of warranty.

4. Customer Support for Product Specifications

Some products within the product range may contain substances which are subject to restrictions in certain jurisdictions in order to serve specific technical requirements. Necessary information is available on request. In this case the field sales engineer or the internal sales person in charge should be contacted who will be happy to support in this matter.

5. Product R&D

Due to constant product improvement product specifications may change from time to time. As a standard reporting procedure of the Product Change Notification (PCN) according to the JEDEC-Standard inform about minor and major changes. In case of further queries regarding the PCN, the field sales engineer or the internal sales person in charge should be contacted. The basic responsibility of the customer as per Section 1 and 2 remains unaffected.

6. Product Life Cycle

Due to technical progress and economical evaluation we also reserve the right to discontinue production and delivery of products. As a standard reporting procedure of the Product Termination Notification (PTN) according to the JEDEC-Standard we will inform at an early stage about inevitable product discontinuance. According to this we cannot guarantee that all products within our product range will always be available. Therefore it needs to be verified with the field sales engineer or the internal sales person in charge about the current product availability expectancy before or when the product for application design-in disposal is considered. The approach named above does not apply in the case of individual agreements deviating from the foregoing for customer-specific products.

7. Property Rights

All the rights for contractual products produced by Würth Elektronik eiSos GmbH & Co. KG on the basis of ideas, development contracts as well as models or templates that are subject to copyright, patent or commercial protection supplied to the customer will remain with Würth Elektronik eiSos GmbH & Co. KG. Würth Elektronik eiSos GmbH & Co. KG does not warrant or represent that any license, either expressed or implied, is granted under any patent right, copyright, mask work right, or other intellectual property right relating to any combination, application, or process in which Würth Elektronik eiSos GmbH & Co. KG components or services are used.

8. General Terms and Conditions

Unless otherwise agreed in individual contracts, all orders are subject to the current version of the “General Terms and Conditions of Würth Elektronik eiSos Group”, last version available at www.we-online.com.

WÜRTH ELEKTRONIK
MORE THAN YOU EXPECT

Würth Elektronik eiSos GmbH & Co. KG
EMC & Inductive Solutions
Max-Eyth-Str. 1
74638 Waldenburg
Germany
Tel. +49 (0) 79 42 945 - 0
www.we-online.com
eiSos@we-online.com

CHECKED	REVISION	DATE (YYYY-MM-DD)	GENERAL TOLERANCE	PROJECTION METHOD
SBir	001.001	2023-07-17	DIN ISO 2768-1m	

DESCRIPTION
WE-CLFS Line Filter

ORDER CODE
810911010112

BUSINESS UNIT	STATUS	PAGE
eiSos	Valid	7/7

This electronic component has been designed and developed for usage in general electronic equipment only. This product is not authorized for use in equipment where a higher safety standard and reliability standard is especially required or where a failure of the product is reasonably expected to cause severe personal injury or death, unless the parties have executed an agreement specifically governing such use. Moreover Würth Elektronik eiSos GmbH & Co KG products are neither designed nor intended for use in areas such as military, aerospace, aviation, nuclear control, submarine, transportation, transportation signal, disaster prevention, medical, public information network etc.. Würth Elektronik eiSos GmbH & Co KG must be informed about the intent of such usage before the design-in stage. In addition, sufficient reliability evaluation checks for safety must be performed on every electronic component which is used in electrical circuits that require high safety and reliability functions or performance.