May.1.2024 Copyright 2024 HIROSE ELECTRIC CO., LTD. All Rights Reserved.
In case of consideration for using Automotive equipment / device which demand high reliability, kindly contact our sales window correspondents.

	COUNT	DESCRIPTION OF REVISIONS	BY	CHKD	DATE		COUNT	DESCRIPTION OF REVISIONS	BY	CHKD	DATE
△					. .	△					. .
△					. .	△					. .
△					. .	△					. .

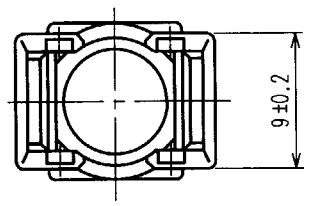

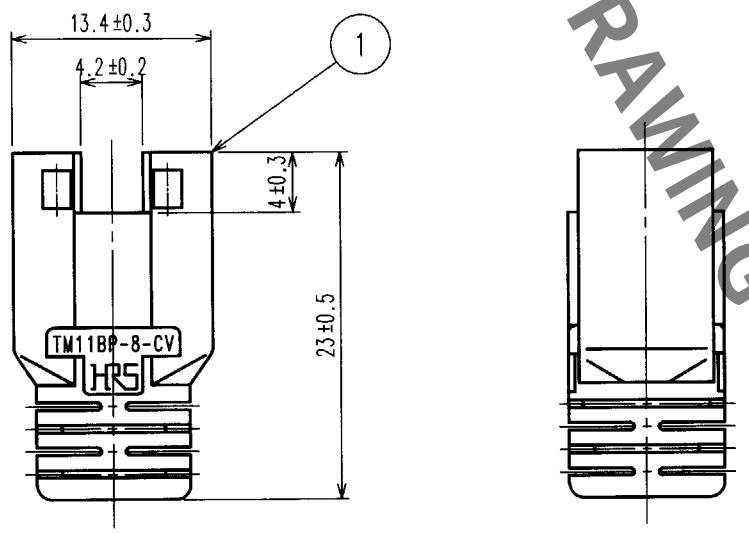

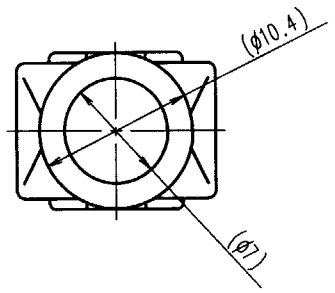

ASSEMBLED

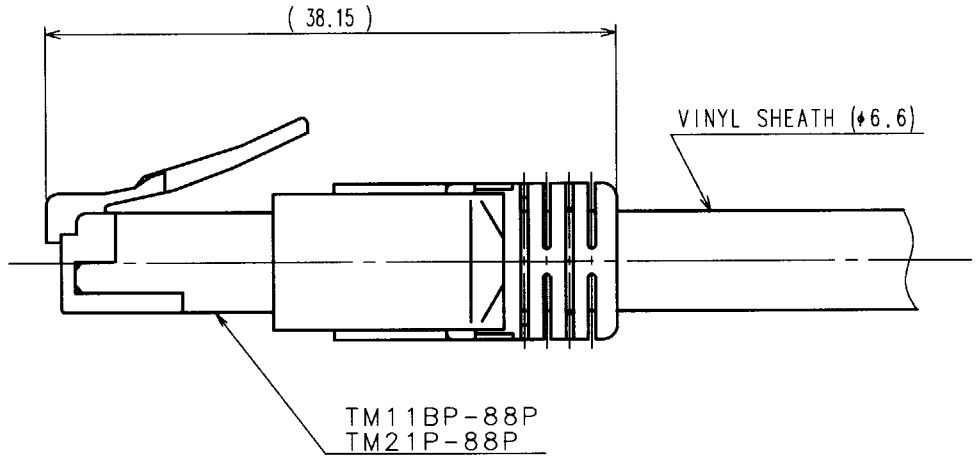

NOTES: 1. ( ) INDICATES THE REFERENCE DIMENSIONS.
2 COLOR NO.S ARE SHOWN IN TABLE-1.
3. PER BAG: 50 PIECES.

2 TABLE-1

PART NO.	HRS NO.	COLOR
TM11BP-8-CV (11)	CL222-2898-6-11	LIGHT BEIGE
TM11BP-8-CV (12)	CL222-2898-6-12	MEDIUM GRAY
TM11BP-8-CV (13)	CL222-2898-6-13	BLACK
TM11BP-8-CV (14)	CL222-2898-6-14	NATURAL LIGHT GRAY
TM11BP-8-CV (15)	CL222-2898-6-15	RED
TM11BP-8-CV (16)	CL222-2898-6-16	GREEN
TM11BP-8-CV (17)	CL222-2898-6-17	BLUE
TM11BP-8-CV (18)	CL222-2898-6-18	YELLOW
TM11BP-8-CV (19)	CL222-2898-6-19	ORANGE

HRS DRAWING FOR REFERENCE

NO.	MATERIAL	FINISH, REMARKS	NO.	MATERIAL	FINISH, REMARKS
1	POLYPROPYLENE	2			

CODE NO. (OLD)	DRAWN	DESIGNED	CHECKED	APPROVED	RELEASED
	S. Sato '00.10.06	S. Sato '00.10.06	T. Watanabe '00.10.06	H. Miura 00.10.06	. .

SCALE 2 : 1
UNITS mm

DRAWING NO. EDC3-122818-01

HRS HIROSE ELECTRIC CO., LTD

PART NO. TM11BP-8-CV(1 ✱✱)

CODE NO. CL222-2898-6-1 ✱✱

1/1

TO
Q2