NCV7694GEVB

NCV7694 Safety Controller for Infra-RED LED Illumination Evaluation Board User's Manual

ON Semiconductor®

www.onsemi.com

EVAL BOARD USER'S MANUAL

Introduction

The evaluation board demonstrates the NCV7694 driver as complement to the image sensor for illumination of the surroundings. The string of the series LED diodes is powered by on−board SEPIC converter with default V_{STRING} voltage of 11.8 V. The external LEDs can be also used via dedicated connector. The board contains up to three white on−board LEDs which are selected by default. The additional IR−LEDs with 850 nm or 940 nm IR wavelengths are populated, but they have to be selected manually by solder strap selector. The typical LED peak current is set by shunt resistor to 3 A.

The NCV7694 is driven from external source of the FLASH pulses. The main functionality is to limit the pulses if they exceed the maximum exposure time or if they are send too frequently. The times can be tuned by two trimmers. If the time or frequency is exceeded, it is automatically reported on the DIAG pin.

The NCV7694 has several kinds of the fault detections. Fault detection can be emulated by shorting or opening on−board jumpers. The indication LEDs can inform users about diagnostic and the status of the supplies.

Evaluation Board Features

- Wide range of supply voltage: 8 to 18 V
- Up to 3 on−board IR LEDs
- Possibility of the external LED connection
- Sepic DC/DC converter with V_{STRING} voltage of 11.8 V
- Nominal LED peak current
  - 3 A − Nominal current
- LED Open−loads, short to ground and Short to V_{STRING} emulation jumpers
- Test points for every signal
- Bypassing of the DC/DC convertor
- Single side PCB assembly

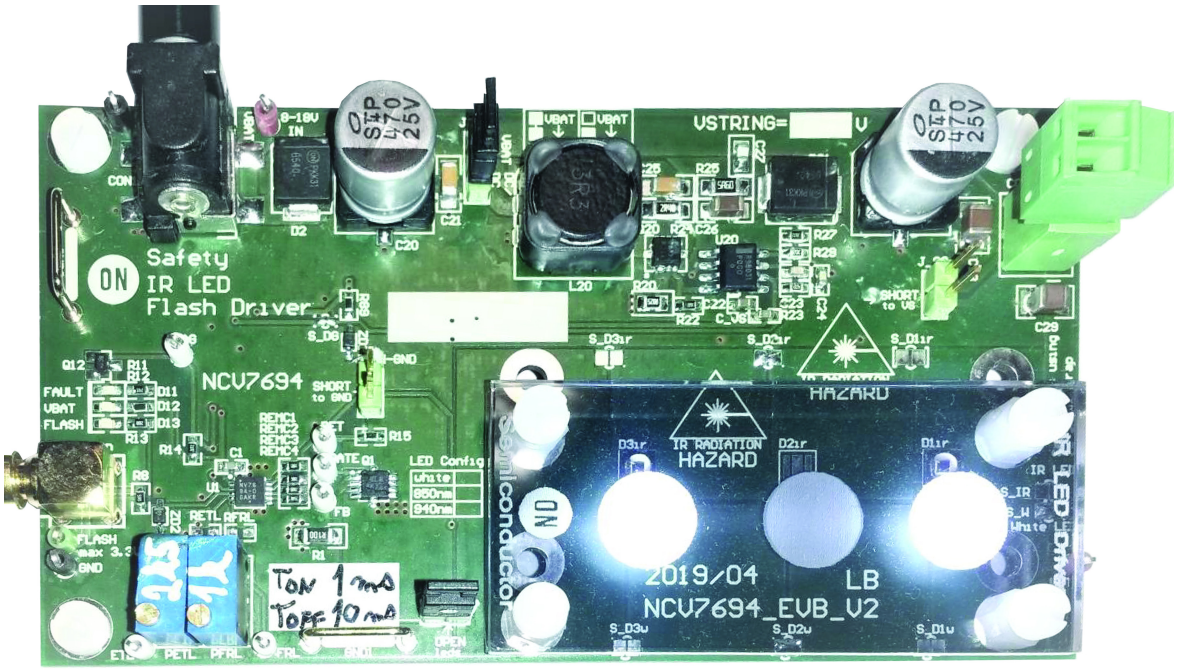

Figure 1. NCV7694GEVB Board

© Semiconductor Components Industries, LLC, 2019

Table 1. ABSOLUTE MAXIMUM RATINGS

Rating	Value	Unit
Supply Voltage (V_{BAT})	−21 to +21	V
LED Strings Current	5	A
Junction Temperature (NCV7694, NCV898031)	−40 to +150	°C
Junction Temperature (OSLON® Black Series IR LEDs)	−40 to +125	°C
Ambient Temperature	−40 to +105	°C

Stresses exceeding those listed in the Maximum Ratings table may damage the device. If any of these limits are exceeded, device functionality should not be assumed, damage may occur and reliability may be affected.

Table 2. RECOMMENDED OPERATING CONDITIONS

Rating	Value	Unit
Supply Voltage (V_{BAT})	8 to 18	V
Rated LED current (during t_{ON})	3	A
Fault mode – board consumption (V_{BAT} = 14 V, status LEDs powered)	6.8	mA
Auxiliary Circuits Consumption in standby mode (NCV7694, DC/DC, LED diodes, pull−ups)	8.8	mA
Ambient Temperature	−40 to +105	°C

Functional operation above the stresses listed in the Recommended Operating Ranges is not implied. Extended exposure to stresses beyond the Recommended Operating Ranges limits may affect device reliability.

Table 3. INTERFACE FUNCTION DESCRIPTION

Connector Name	Connector Type	Description / Function
CON1	DC POWER, 2.5 mm	Input supply connector, DC 8 – 18 V
J1	1x3 header	Short two adjacent pins. Left position: Apply V_{BAT} voltage to V_{STRING} unregulated voltage Right position: DC/DC regulated V_{STRING} voltage Unconnected: no V_{STRING} supply
J_SH−GND	1x2 header	Short DET pin to GND via 10 kΩ serial resistor
J_SC	1x2 header	Short DET pin to V_{STRING} supply
J_OPEN	1x2 header	If unconnected, open load on the LEDs is present
CON_LEDs	1x2 header	Connector for external IR LED connection.
S_DG	Solder strap	Closed: DIAG pin connected to the EN pin of the DC/DC; Opened: DC/DC always active
S_W, S_IR	Solder Strap	Open S_W and Open S_IR: On−board LEDs are not used Close S_W and Open S_IR for White LED on−board configuration Open S_W and Close S_IR for IR LED on−board configuration Close S_W and Close S_IR: not permissible
S_D1ir, S_D2ir, S_D3ir, S_D1w, S_D2w, S_D3w	Solder strap	Close in case of not using the LED footprint position; Open if LED is used
DET, GATE, FB, DIAG, FRL, ETL, FLASH, VSTR, VBAT	Test Point	Test points for each signal
FLASH_in	SMB−RA	Flash Input pin (max 3.3 V)
GND1, GND2	Wire Bridge	Ground wire, global ground.

GETTING STARTED

The evaluation board is supplied through a standard 5.5 x 2.5 mm DC connector. Supply voltage range has to be from 8 to 18 V. For the supply voltage above 18 V, the board temperature can be the limitation. Jumpers $J_{_OPEN}$ and J1 should be connected for normal operation. After power up, the green indication LED for V_{BAT} supply should indicate the battery supply. The resistance of the trimmers P_{ETL} and P_{FRL} should be set in working range of 0.8 – 15 kΩ.

The NCV7694 evaluation board has to be controlled from external source of the FLASH pulses. The external source of the flash pulses can be an image sensor or waveform pulse generator. The maximum voltage of the FLASH signal is 3.3 V.

The LED current which is driven by NCV7694 can be changed replacing R1 using following formula:

$$I_{LED} = \frac{V_{FB}}{R_1} = \frac{0.3}{0.1} = 3\ [A] \qquad \text{(eq. 1)}$$

I_{LED} – LED channel current flow

V_{FB} – FB Regulation reference

R1– Shunt Resistor

The LED peak current is set to 3 A by default. The current can be changed by replacing the R1 resistor.

To decrease the power dissipation of the mosfet transistor, using DC/DC converter is highly recommended. The V_{STRING} voltage is provided by sepic DC/DC converter which is configured to have output voltage at 11.7 V. If needed the V_{STRING} voltage can be adjusted by replacing the R_{27} and R_{29} resistors.

The formula for V_{STRING} voltage using NCV898031 converter is:

$$V_{STRING} = 1.2\,\frac{(R_{27} + R_{29})}{R_{29}} \qquad \text{(eq. 2)}$$

The DC/DC converter can be easily bypassed by shorting of the two pins on the left side of jumper J1. After bypassing the DC/DC converter, the V_{STRING} voltage will be powered directly from the V_{BAT}. Applying too high V_{BAT} voltage with combination with high current setting can cause high thermal dissipation on the external switching component.

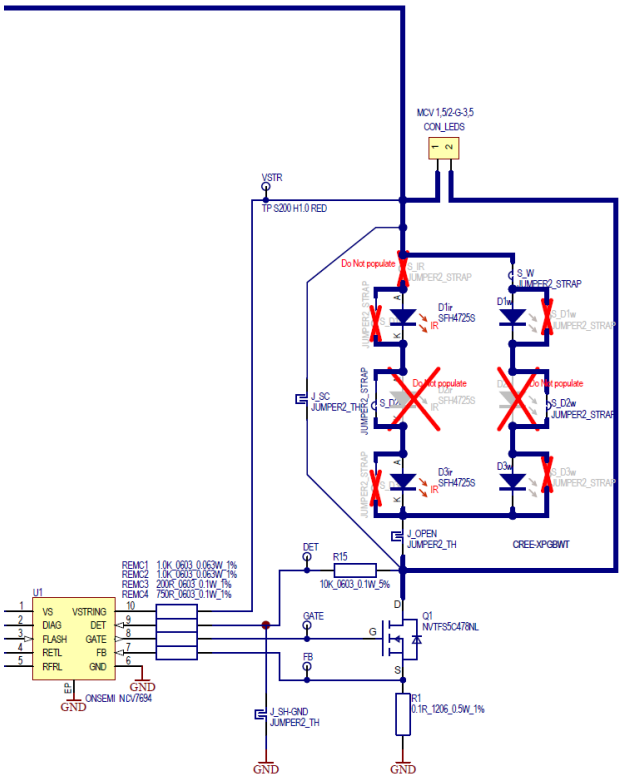

Figure 2: Schematic of the Output Stage

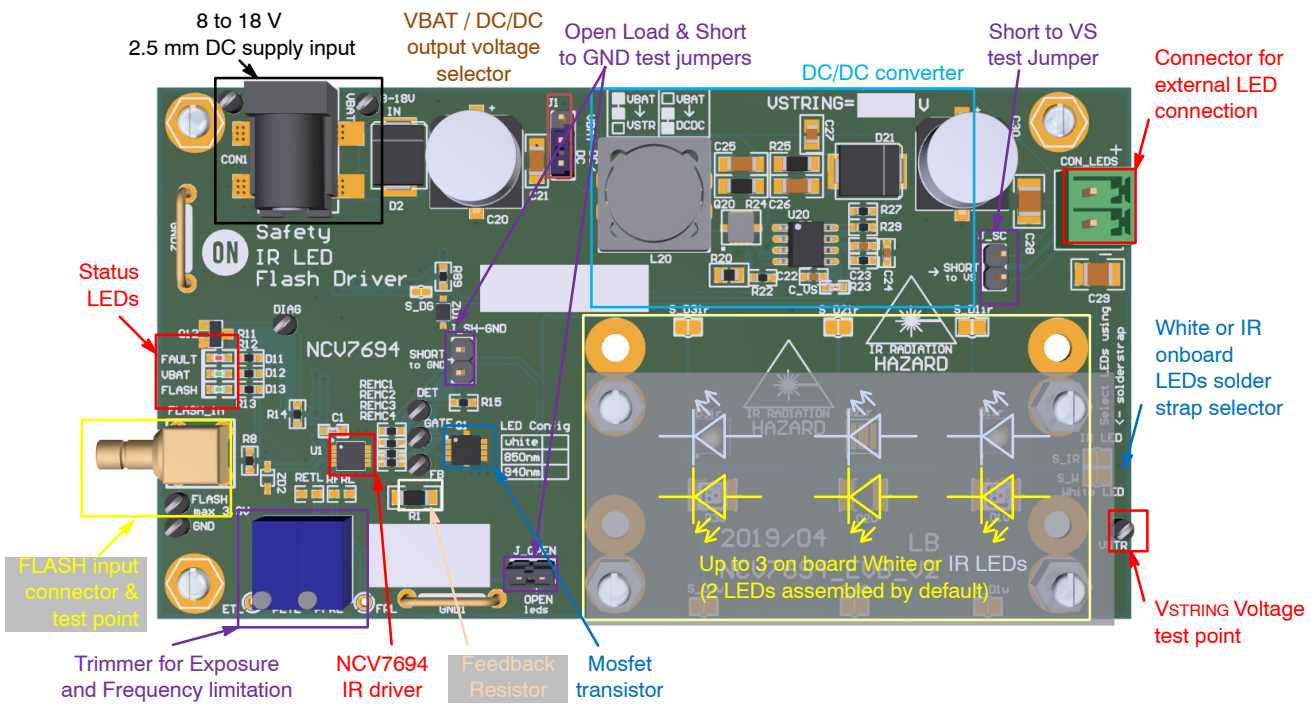

Figure 3. NCV7694 Linear Safety IR LED Driver Evaluation Board Picture

MODULES CONTROL STRATEGY

The board is designed to operate primary with DC/DC converter which creates constant voltage on the V_{STRING} supply line. The high voltage drop on the DET pin in combination with high current and maximum Duty Cycle can cause huge power dissipation on the external switching component. To have reasonable power dissipation, the V_{STRING} voltage should be send appropriate to have reasonable voltage drop on the Q1 mosfet transistor during the active FLASH pulse.

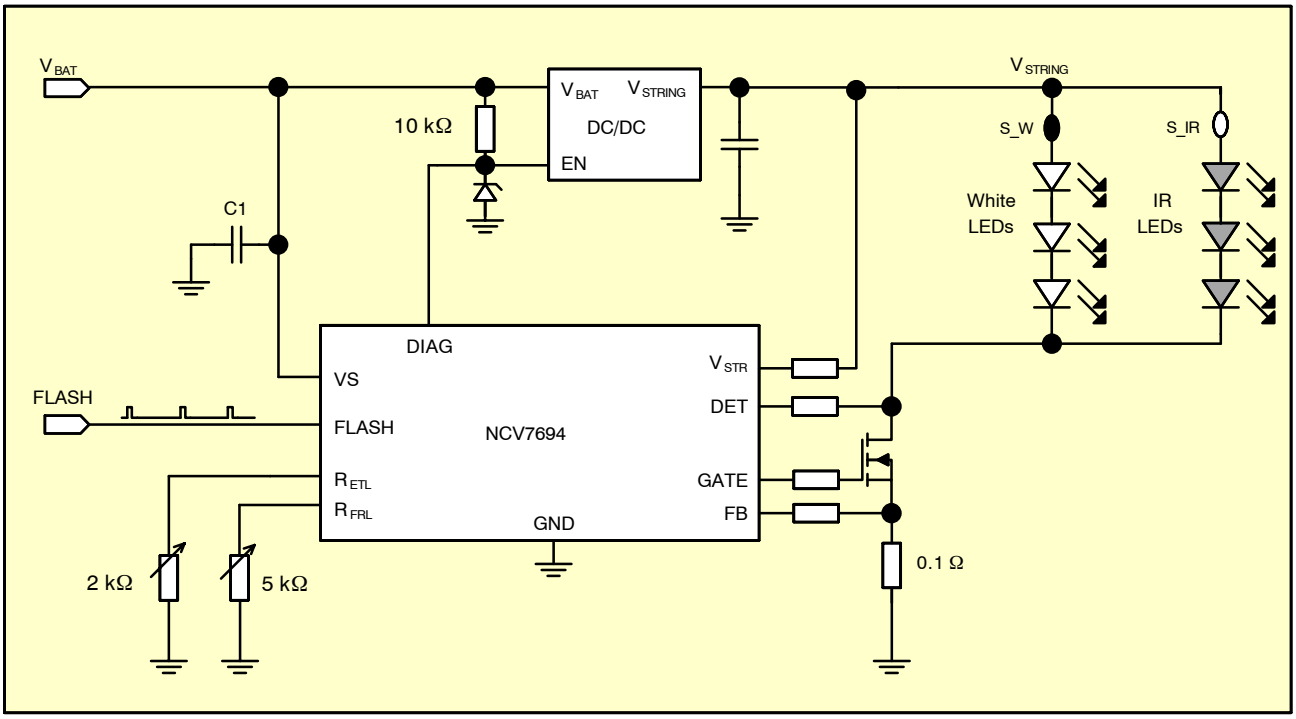

Figure 4. Simplified Options How to Control Current Flow by the LEDs

LED STRING ON−BOARD VARIANT

Two LED string positions are present on the EVB board. The high brightness white LED string is connected by default. If the Infra LED string is required, then the solder strap has to be re−soldered manually. Since the IR light is not visible, it is customer responsibility to take a care about human eye protection as soon as the IR light is used.

Solder strap S_W is selector for White LEDs, Solder strap S_IR is selector for IR LEDs. Only one solder strap has to be connected at one time.

FAULT DETECTION

Device can detect several faults:

- IR LED faults
- RETL, RFRL faults
- Under voltage Supply
- Thermal faults

The fault is reported to the open drain DIAG pin, which can be connected to the EN pin of the DC/DC converter, which can switch off the output. The *LED faults* which can be detected are following:

- *Open Load* – The fault is reported only during the expected t_{ON} time. The fault is triggered when voltage on the FB pin drop down below 150 mV for at least 22 μs. The fault can be emulated by opening the J_OPEN jumper.
- *Short to GND* – The fault is detected only during the t_{OFF} period. The fault is triggered when the voltage on the DET pin is below the 0.35 V for at least 10 μs. The fault is reported and latched during whole t_{OFF} period. The fault is cleared with valid rising edge of the FLASH pulse. Fault can be emulated by shorting the J_SH_GND jumper.
- *Short to V_{STRING}* – The fault is detected during t_{ON} period using DET pin. If the voltage between DET pin and VSTR pin drops below 1.2 V, the fault is detected. The GATE voltage is turned off to protect the external MOSFET transistor against high power dissipation. Fault can be emulated by shorting the J_SC jumper.

The NCV7694 reads the status of the R_{ETL}, R_{FRL} *resistors*, to ensure correct function, the Open Load and short to Ground detection is implemented on these resistors.

- If the resistance drops below 750 Ω, then the short circuit is detected.
- If resistance is higher than 17.5 kΩ, the open load is detected.

The DIAG pin keeps reporting a fault until the resistance on that pin will come back into normal range.

MAXIMUM EXPOSURE TIME

The NCV7694 provides the safety function of the maximum exposure time and maximum frequency limitation.

If the pulse on the *FLASH input exceeds* the set value, then the output driver is switched off and it is reported on the DIAG pin during the cut−off period. The maximum exposure time which can be set is in the range of 320 – 6000 μs.

MAXIMUM FREQUENCY RANGE

The second safety feature is the *maximum frequency limitation*. In case if the multiple consecutively FLASH pulses are sent too frequently, all following pulses which are send during the safety T_{OFF} time are ignored and reported. The operation range for required t_{OFF} time is set by external RFRL resistor in range of 8 – 150 ms. It means, the minimum required t_{OFF} time on the FLASH input pin has to be 8 ms when RFRL = 800 Ω is used. The maximum FLASH frequency will depend on the maximum exposure time and the t_{OFF} setting.

UNDER VOLTAGE SUPPLY DETECTION

Under voltage on the VS supply is reported on the DIAG pins as soon as the voltage is below the Supply Under−Voltage Lockout 4.5 V.

THERMAL SHUTDOWN

During the thermal shutdown the DIAG pin reports a fault.

EXPOSURE TIME AND FREQUENCY LIMITATION

The safety function of the NCV7694 driver is to limit the IR−LED pulses in case of any fault on the FLASH input line. Two resistors are used for setting the maximum allowed exposure time on the output LED pulse and maximum allowed FLASH frequency.

The ETL resistor, which can be in range of 800 Ω – 15 kΩ, sets the maximum exposure time using following formula:

$$t_{ONmax} = \frac{R_{ETL}}{K_{ETL}} \text{ [ms]}$$

$$t_{ONmax} = \frac{1.25}{2.5} \text{ ms}$$

$$t_{ONmax} = 0.5 \text{ ms} \qquad \text{(eq. 3)}$$

Where:

t_{ONmax} – Maximum exposure time

R_{ETL} – External resistor setting [kΩ]

K_{ETL} – ETL Coefficient with value of 2.5 kΩ x ms^{-1}

The operational range of the exposure time limitation is from 320 μs to 6.0 ms.

The FRL resistor, which can be in range of 800 Ω – 15 kΩ, sets the minimum T_{OFF} time which needs to be present in between two FLASH pulses:

$$t_{OFF} = 1000 \times \frac{R_{FRL}}{K_{FRL}} \text{ [ms]}$$

$$t_{OFF} = 1000 \times \frac{2.5}{0.1} \text{ ms}$$

$$t_{OFF} = 40 \text{ ms} \qquad \text{(eq. 4)}$$

Where:

t_{OFF} – Minimum t_{OFF} time between two FLASH pulses

R_{FRL} – External resistor setting [kΩ]

K_{FRL} – FRL Coefficient with value of 0.1 kΩ x ms^{-1}

The operation range of the maximum frequency limitation can be set in range of 8 – 150 ms for t_{OFF} time and 0.32 – 6 ms for t_{ON} time. In general pulses cannot be longer than 6 ms and cannot be send faster than 71 Hz for long pulses or 120 Hz for short pulses.

IR LEDs

The NCV7694_EVB_V1 board can operate with the various IR−LEDs from OSLON Black product series. The centroid wavelength of the IR LEDs is from 810 nm to 940 nm. The peak current can be up to 5 A for limited time. Forward voltage of single silicon junction of IR LED is around 1.6 V. The typical IR−LED contains two junctions connected in series in one physical LED component. The V_F of these double IR LEDs is 2.75 – 3.80 V.

Table 4. LIST OF THE RECOMMENDED IR LEDs

Name	λ_{cent} [nm]	V_F [V]	Angle [°]	P_{tot} [W]
SFH 4715AS	850	3.80	90	5.8
SFH 4716AS	850	3.75	150	5.8
SFH 4725AS	940	2.95	80	5.2
SFH 4727AS	940	2.95	50	5.2

POWER DISSIPATION

The main sources of power dissipation is external switching component – Transistor Q1 and IR LEDs. The transistor NVTFS5C478 which is in WDFN8 package has maximum power dissipation P_D = 3 W. Thermal resistance of the transistor $R_{\theta JA}$ is 51°C/W. Thanks to the safety feature – maximum exposure time and frequency limitation, the duty cycle will not exceed 42.9% (Worst case combination). The maximum allowed voltage drop with the maximum duty cycle setting is 2.33 V on the DET pin. User has to be careful in case of supplying the V_{STRING} voltage directly from the battery, the power dissipation has to be carefully calculated in case of worst case of ETL / FRL setting.

The typical voltage drop for one single IR LED at 3 A is 3.80 V (for SFH4715AS). The power dissipation of each IR LED for worst case scenario is 4.89 W.

For typical FLASH signal with duration of 1.5 ms at 60 Hz, the duty cycle is 9%, the maximum voltage drop which can be applied to the DET pin is 11.1 V. For typical usage there is enough power dissipation margin work directly from unregulated battery supply. The Power consumption of the IR LED with 9% duty cycle is ~1 W.

The formula to calculate thermal heating of the external transistor is following:

$$\Delta T_j = R_{\theta JA} \times (V_{DET} - V_{FB}) \times I_{LED} \times DC\ [°C]$$

$$\Delta T_j = 51 \times (4.0 - 0.3) \times 3.0 \times 0.09°C$$

$$\Delta T_j = 50.95°C \qquad \text{(eq. 5)}$$

Where:

ΔT_j – Increase temperature of the component

$R_{\theta JA}$ – Thermal Resistance Junction – Ambient

P – Power dissipation of the component

V_{DET} – Voltage drop on the Drain pin

I_{LED} – LED Output current

DC – Duty cycle

V_{FB} – FB reference voltage of 0.3 V

The junction temperature of the transistor will raise about 51°C above ambient temperature when the overall power dissipation on the mosfet transistor will be 1 W.

EVALUATION BOARD SCHEMATIC

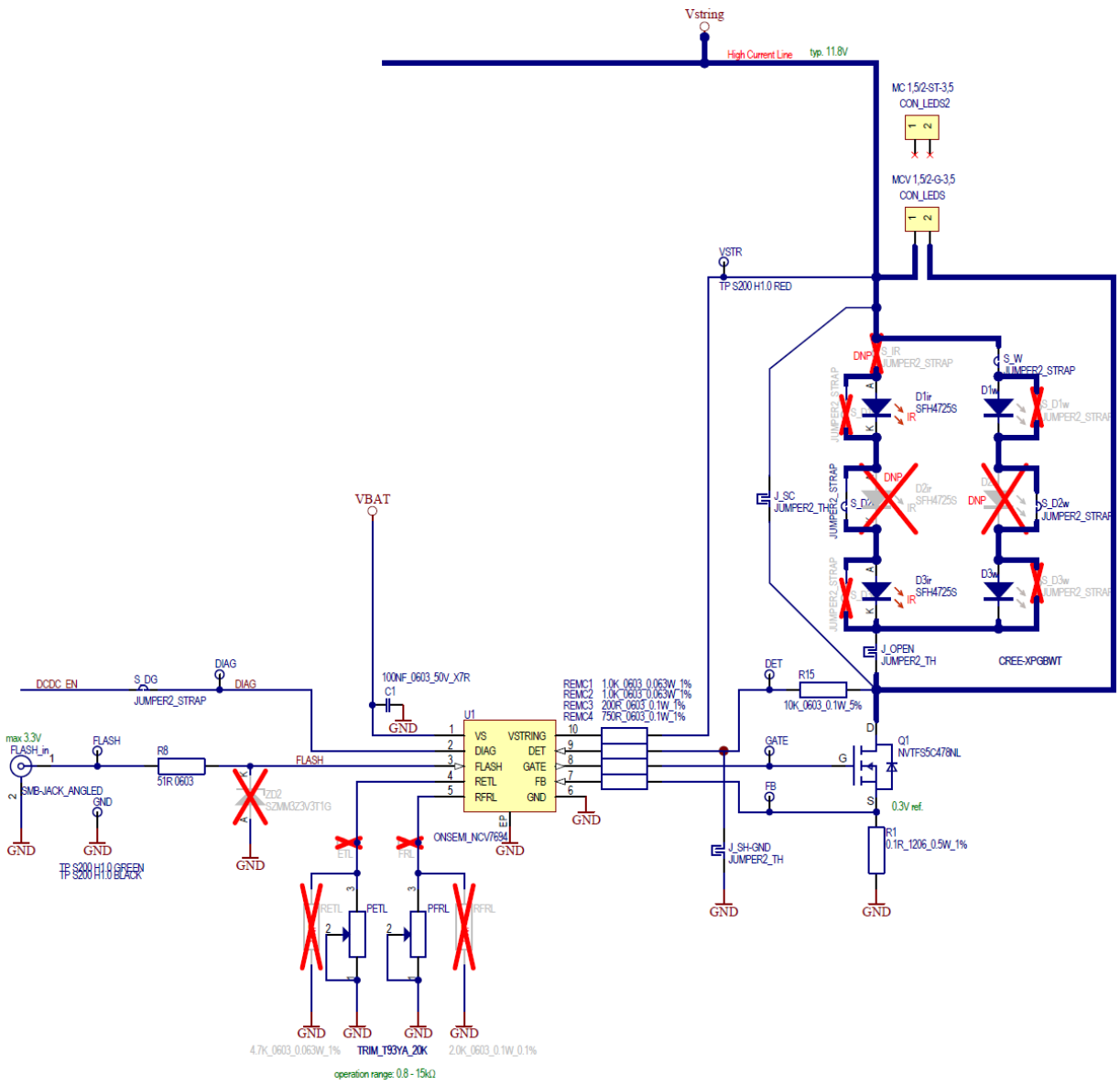

Figure 5. Schematic of the NCV7694 Device Driving Block

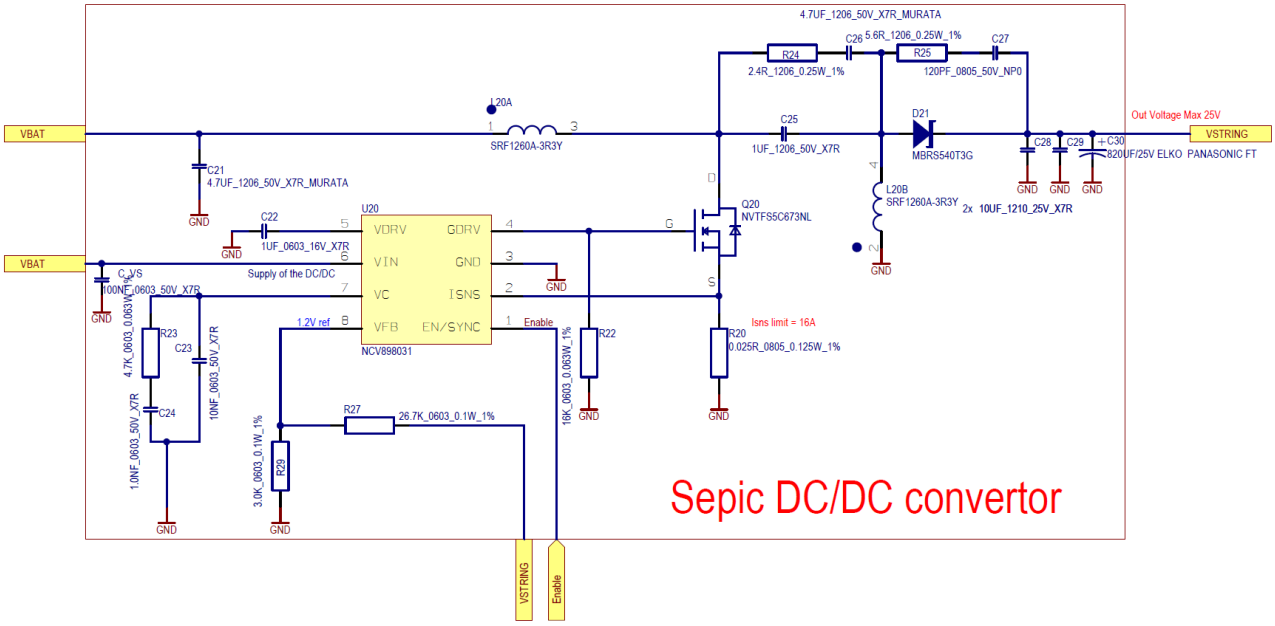

Figure 6. Schematic of the DC/DC Block

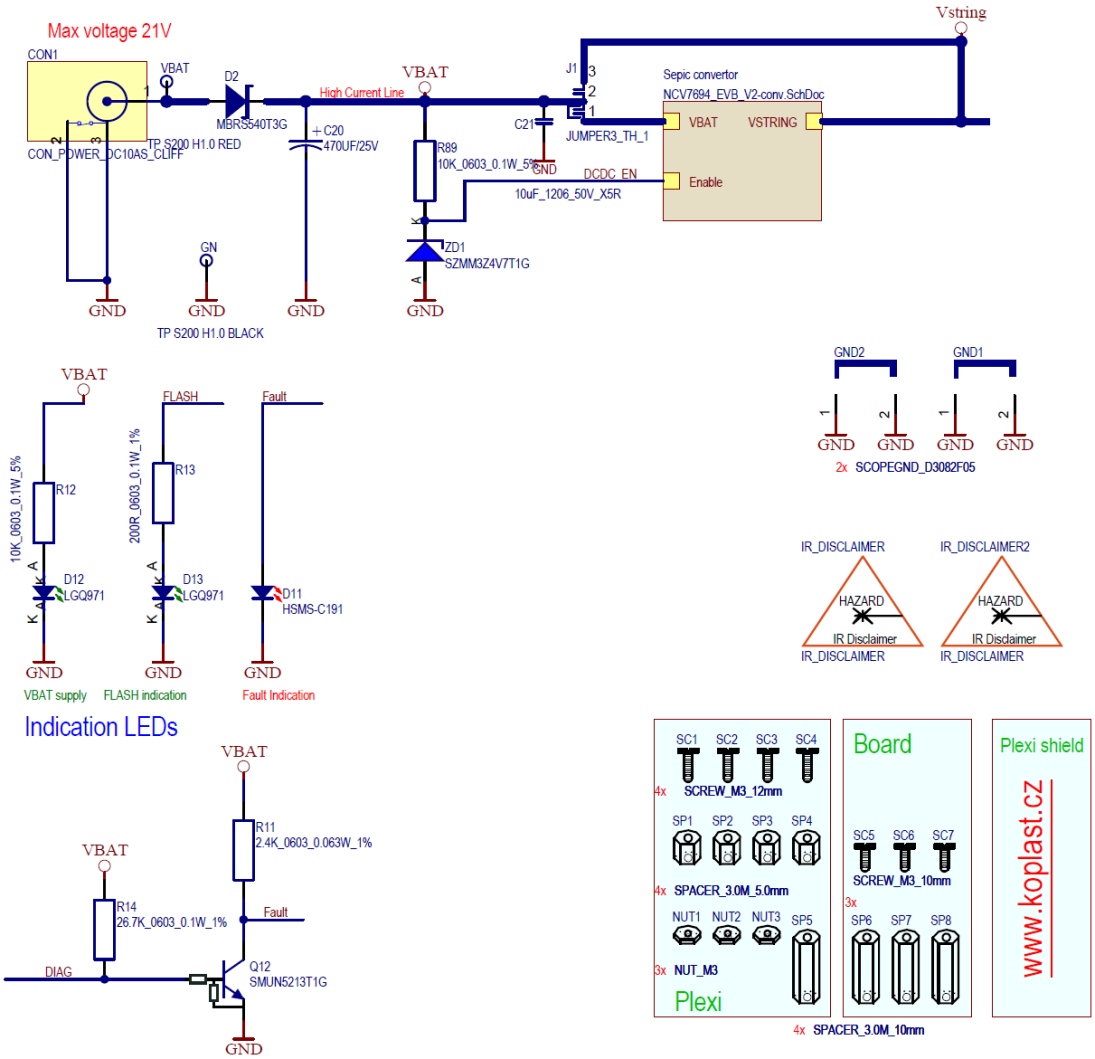

Figure 7. Schematic of the Auxiliary Circuits

PCB DRAWINGS

Assembly Drawings

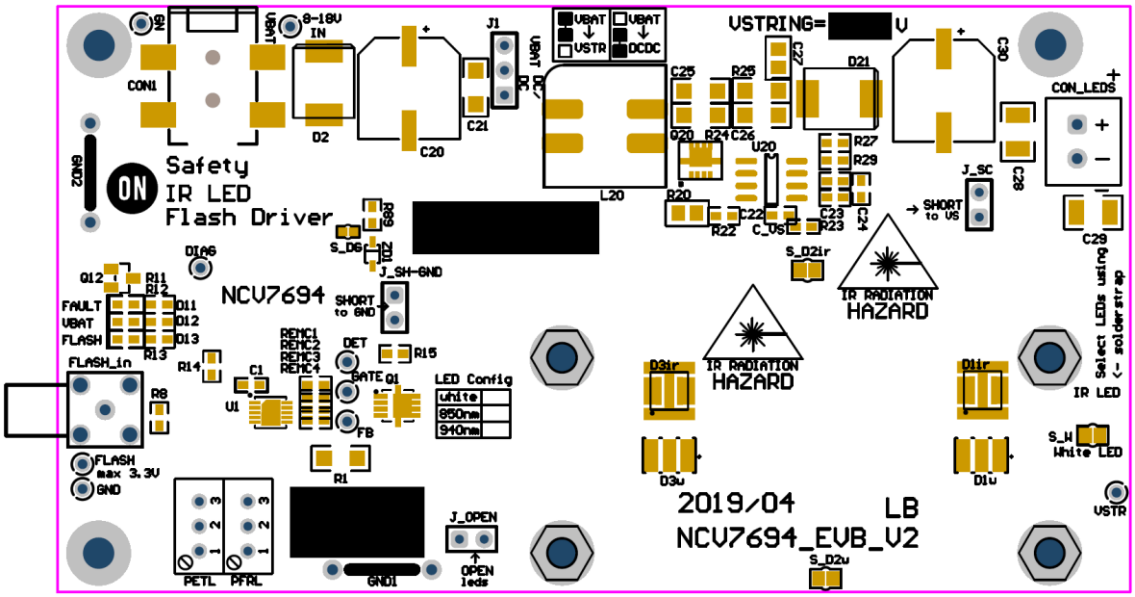

Figure 8. NCV7694 EVB PCB Top Assembly Drawing

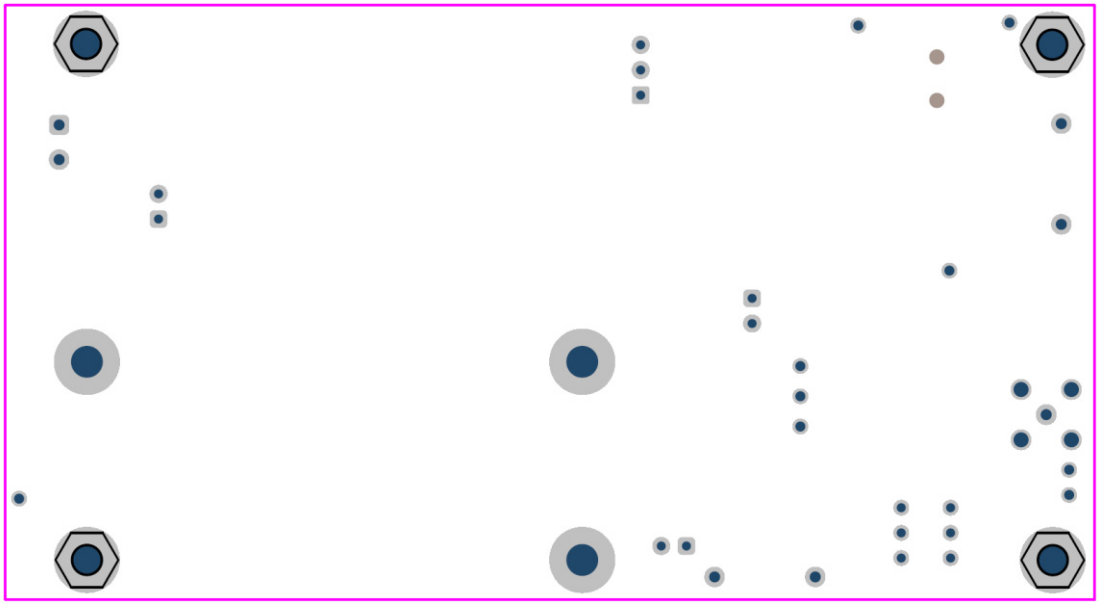

Figure 9. NCV7694 EVB PCB Bottom Assembly Drawing

Composite Drawings

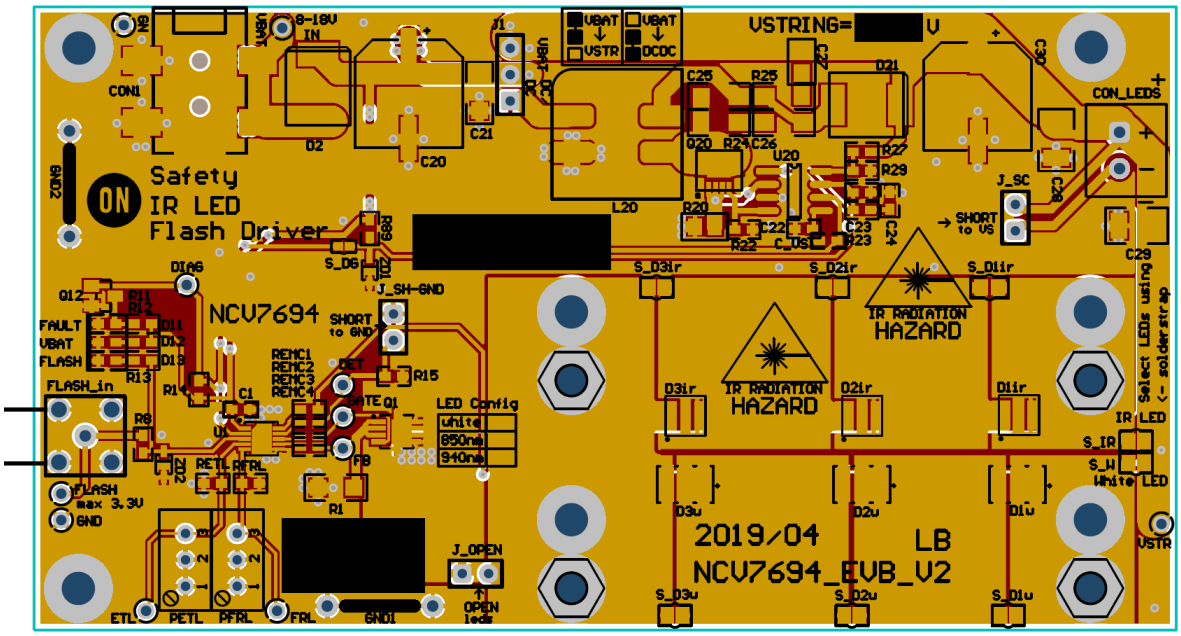

Figure 10. NCV7694 EVB PCB Top Composite Drawing

PCB Preview

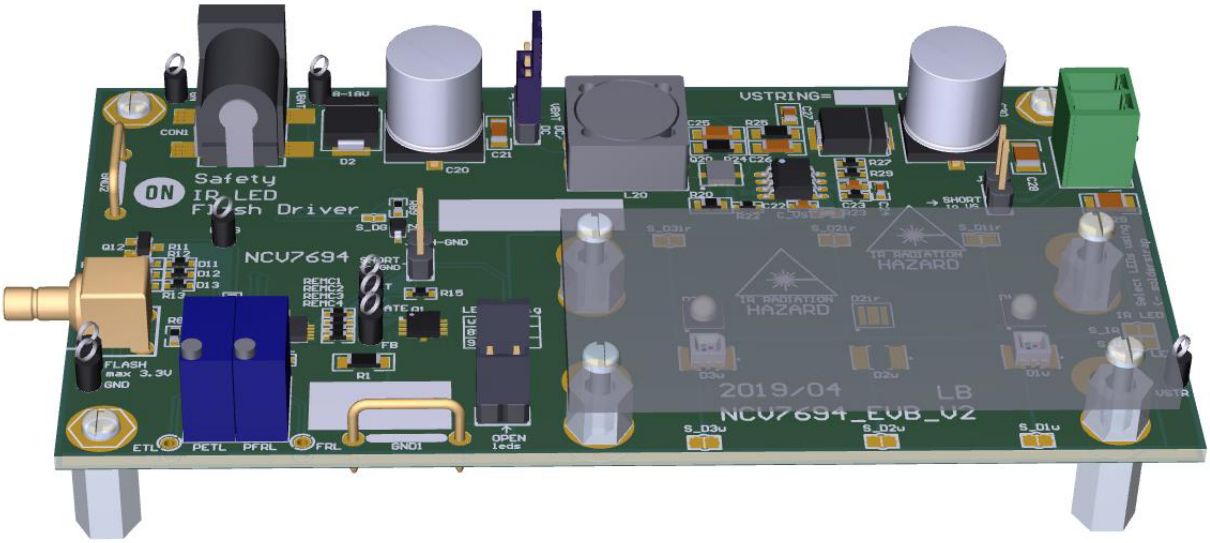

Figure 11. NCV7694 EVB 3D Top Side View

REFERENCES

1. ON Semiconductor, NCV7694−D: Safety Controller for Infra−Red LED Illumination to Complement the Image Sensor for Automotive Applications
2. ON Semiconductor, NCV898031−D: 2 MHz Non−Synchronous SEPIC/Boost Controller

OSLON is a trademark of OSRAM GMBH.

onsemi, onsemi, and other names, marks, and brands are registered and/or common law trademarks of Semiconductor Components Industries, LLC dba "**onsemi**" or its affiliates and/or subsidiaries in the United States and/or other countries. **onsemi** owns the rights to a number of patents, trademarks, copyrights, trade secrets, and other intellectual property. A listing of **onsemi**'s product/patent coverage may be accessed at www.onsemi.com/site/pdf/Patent−Marking.pdf. **onsemi** is an Equal Opportunity/Affirmative Action Employer. This literature is subject to all applicable copyright laws and is not for resale in any manner.

The evaluation board/kit (research and development board/kit) (hereinafter the "board") is not a finished product and is not available for sale to consumers. The board is only intended for research, development, demonstration and evaluation purposes and will only be used in laboratory/development areas by persons with an engineering/technical training and familiar with the risks associated with handling electrical/mechanical components, systems and subsystems. This person assumes full responsibility/liability for proper and safe handling. Any other use, resale or redistribution for any other purpose is strictly prohibited.

THE BOARD IS PROVIDED BY ONSEMI TO YOU "AS IS" AND WITHOUT ANY REPRESENTATIONS OR WARRANTIES WHATSOEVER. WITHOUT LIMITING THE FOREGOING, ONSEMI (AND ITS LICENSORS/SUPPLIERS) HEREBY DISCLAIMS ANY AND ALL REPRESENTATIONS AND WARRANTIES IN RELATION TO THE BOARD, ANY MODIFICATIONS, OR THIS AGREEMENT, WHETHER EXPRESS, IMPLIED, STATUTORY OR OTHERWISE, INCLUDING WITHOUT LIMITATION ANY AND ALL REPRESENTATIONS AND WARRANTIES OF MERCHANTABILITY, FITNESS FOR A PARTICULAR PURPOSE, TITLE, NON−INFRINGEMENT, AND THOSE ARISING FROM A COURSE OF DEALING, TRADE USAGE, TRADE CUSTOM OR TRADE PRACTICE.

onsemi reserves the right to make changes without further notice to any board.

You are responsible for determining whether the board will be suitable for your intended use or application or will achieve your intended results. Prior to using or distributing any systems that have been evaluated, designed or tested using the board, you agree to test and validate your design to confirm the functionality for your application. Any technical, applications or design information or advice, quality characterization, reliability data or other services provided by **onsemi** shall not constitute any representation or warranty by **onsemi**, and no additional obligations or liabilities shall arise from **onsemi** having provided such information or services.

onsemi products including the boards are not designed, intended, or authorized for use in life support systems, or any FDA Class 3 medical devices or medical devices with a similar or equivalent classification in a foreign jurisdiction, or any devices intended for implantation in the human body. You agree to indemnify, defend and hold harmless **onsemi**, its directors, officers, employees, representatives, agents, subsidiaries, affiliates, distributors, and assigns, against any and all liabilities, losses, costs, damages, judgments, and expenses, arising out of any claim, demand, investigation, lawsuit, regulatory action or cause of action arising out of or associated with any unauthorized use, even if such claim alleges that **onsemi** was negligent regarding the design or manufacture of any products and/or the board.

This evaluation board/kit does not fall within the scope of the European Union directives regarding electromagnetic compatibility, restricted substances (RoHS), recycling (WEEE), FCC, CE or UL, and may not meet the technical requirements of these or other related directives.

FCC WARNING − This evaluation board/kit is intended for use for engineering development, demonstration, or evaluation purposes only and is not considered by **onsemi** to be a finished end product fit for general consumer use. It may generate, use, or radiate radio frequency energy and has not been tested for compliance with the limits of computing devices pursuant to part 15 of FCC rules, which are designed to provide reasonable protection against radio frequency interference. Operation of this equipment may cause interference with radio communications, in which case the user shall be responsible, at its expense, to take whatever measures may be required to correct this interference.

onsemi does not convey any license under its patent rights nor the rights of others.

LIMITATIONS OF LIABILITY: **onsemi** shall not be liable for any special, consequential, incidental, indirect or punitive damages, including, but not limited to the costs of requalification, delay, loss of profits or goodwill, arising out of or in connection with the board, even if **onsemi** is advised of the possibility of such damages. In no event shall **onsemi**'s aggregate liability from any obligation arising out of or in connection with the board, under any theory of liability, exceed the purchase price paid for the board, if any.

The board is provided to you subject to the license and other terms per **onsemi**'s standard terms and conditions of sale. For more information and documentation, please visit www.onsemi.com.

ADDITIONAL INFORMATION

TECHNICAL PUBLICATIONS:
Technical Library: www.onsemi.com/design/resources/technical−documentation
onsemi Website: www.onsemi.com

ONLINE SUPPORT: www.onsemi.com/support
For additional information, please contact your local Sales Representative at www.onsemi.com/support/sales