IXYS UK WESTCODE

Date:- 8 March 2018

Data Sheet Issue: P2

High Power Sonic FRD
Type E1250HC45E

Absolute Maximum Ratings

	VOLTAGE RATINGS	MAXIMUM LIMITS	UNITS
V_{RRM}	Repetitive peak reverse voltage, (note 1)	4500	V
V_{RSM}	Non-repetitive peak reverse voltage, (note 1)	4600	V
$V_{R(d.c.)}$	Maximum reverse d.c. voltage (note 1)	2800	V

	OTHER RATINGS (note 6)	MAXIMUM LIMITS	UNITS
$I_{F(AV)M}$	Mean forward current, T_{sink}=55°C, (note 2)	1355	A
$I_{F(AV)M}$	Mean forward current. T_{sink}=100°C, (note 2)	845	A
$I_{F(AV)M}$	Mean forward current. T_{sink}=100°C, (note 3)	438	A
$I_{F(AV)M}$	Mean forward current. T_{sink}=100°C, (note 4)	605	A
$I_{F(RMS)}$	Nominal RMS forward current, T_{sink}=25°C, (note 2)	2550	A
$I_{F(d.c.)}$	D.C. forward current, T_{sink}=25°C, (note 5)	1623	A
I_{FSM}	Peak non-repetitive surge t_p=10ms, V_{RM}=60%V_{RRM}, (note 6)	20.5	kA
I_{FSM2}	Peak non-repetitive surge t_p=10ms, $V_{RM}\leq$10V, (note 6)	22.6	kA
I^2t	I^2t capacity for fusing t_p=10ms, V_{RM}=60%V_{RRM}, (note 6)	2.11×10^6	A^2s
I^2t	I^2t capacity for fusing t_p=10ms, $V_{RM}\leq$10V, (note 6)	2.55×10^6	A^2s
P_{rr}	Maximum non-repetitive peak reverse recovery power, (note 8)	6.2	MW
$T_{j\,op}$	Operating temperature range	-40 to +140	°C
T_{stg}	Storage temperature range	-40 to +150	°C

Notes:-
1) De-rating factor of 0.13% per °C is applicable for T_j below 25°C.
2) Double side cooled, single phase; 50Hz, 180° half-sinewave.
3) Anode side cooled, single phase; 50Hz, 180° half-sinewave.
4) Cathode side cooled, single phase; 50Hz, 180° half-sinewave.
5) Double side cooled.
6) Half-sinewave, 140°C T_j initial.
7) Current (I_F) ratings have been calculated using V_{T0} and r_T (see page 2)
8) T_j=T_{jop}, I_F=1250A, di/dt=2000A/µs V_r=2800V and L_s=230nH. Test circuit and sample waveform are shown in diagram 1. IGBT type T1200EB45E used as switch.

Characteristics

	PARAMETER	MIN.	TYP.	MAX.	TEST CONDITIONS (Note 1)	UNITS
V_{FM}	Maximum peak forward voltage	-	3.25	3.5	I_{FM}=1250A	V
		-	-	5.11	I_{FM}=2500A	
V_{T0}	Threshold voltage	-	-	2.072	Current range 1355A - 4065A (Note 2)	V
r_T	Slope resistance	-	-	1.166		mΩ
V_{T01}	Threshold voltage	-	-	2.01	Current range 1250A - 3750A	V
r_{T1}	Slope resistance	-	-	1.193		mΩ
V_{FRM}	Maximum forward recovery voltage	-	-	330	di/dt = 3000A/µs	V
		-	-	170	di/dt = 3000A/µs, T_j=25°C	
I_{RRM}	Peak reverse current	-	-	65	Rated V_{RRM}	mA
		-	-	1.5	Rated V_{RRM}, T_j=25°C	
Q_{rr}	Recovered charge	-	1850	2100	I_{FM}=1250A, t_p=1ms, di/dt=2000A/µs, V_r=2800V, 50% Chord (note 3)	µC
Q_{ra}	Recovered charge, 50% Chord	-	600	-		µC
I_{rm}	Reverse recovery current	-	1000	1200		A
t_{rr}	Reverse recovery time, 50% Chord	-	1.20	-		µs
E_{rr}	Reverse recovery energy loss	-	3.7	4.2		J
R_{thJK}	Thermal resistance, junction to heatsink	-	-	0.0105	Double side cooled	K/W
		-	-	0.0274	Anode side cooled	K/W
			-	0.0173	Cathode side cooled	
F	Mounting force	32	-	40	(Note 4)	kN
W_t	Weight	-	1.2	-		kg

Notes:-
1) Unless otherwise indicated T_j=140°C.
2) V_{T0} and r_T were used to calculate the current ratings illustrated on page one.
3) Figures 3-7 were compiled using these conditions. Test circuit and sample waveform are shown in diagram 1.
4) For clamp forces outside these limits, please consult factory.

Additional information on Ratings and Characteristics

1.0 De-rating Factor

A blocking voltage de-rating factor of 0.13% per °C is applicable to this device for T_j below 25°C.

2.0 ABCD Constants

These constants (applicable only over current range of V_F characteristic in Figure 1) are the coefficients of the expression for the forward characteristic given below:

$$V_F = A + B \cdot \ln(I_F) + C \cdot I_F + D \cdot \sqrt{I_F}$$

where I_F = instantaneous forward current.

3.0 Reverse recovery ratings

Diagram 1 – Reverse Recovery test circuit and sample waveform

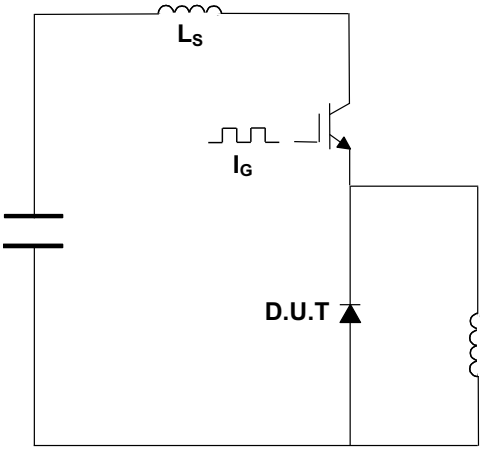

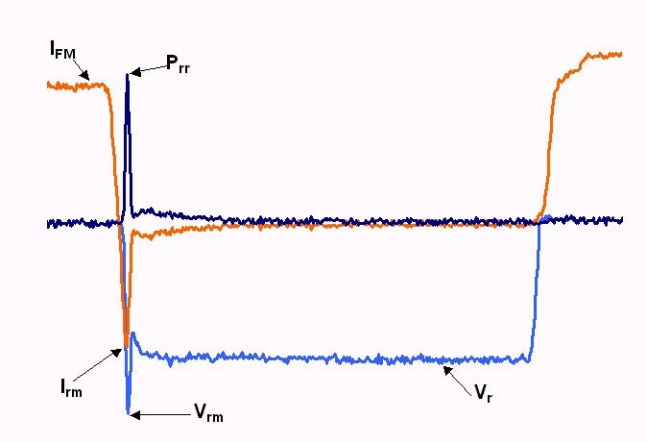

(i) Q_{ra} is based on 50% I_{rm} chord as shown in Figure below.

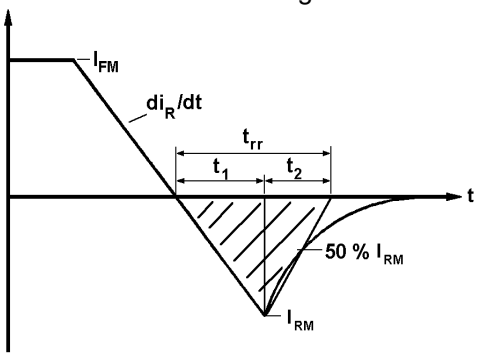

(ii) Q_{rr} is based on a 20µs integration time.

I.e.

$$Q_{rr} = \int_0^{20\mu s} i_{rr}.dt$$

(iii) $$K\ Factor = \frac{t_1}{t_2}$$

4.0 Reverse Recovery Loss

The following procedure is recommended for use where it is necessary to include reverse recovery loss.

From waveforms of recovery current obtained from a high frequency shunt (see Note 1) and reverse voltage present during recovery, an instantaneous reverse recovery loss waveform must be constructed. Let the area under this waveform be E joules per pulse. A new sink temperature can then be evaluated from:

$$T_{SINK} = T_{J(MAX)} - E \cdot \left[k + f \cdot R_{th(J-Hs)}\right]$$

Where k = 0.2314 (°C/W)/s

E = Area under reverse loss waveform per pulse in joules (W.s.)
f = Rated frequency in Hz at the original sink temperature.
$R_{th(J-Hs)}$ = d.c. thermal resistance (°C/W)

The total dissipation is now given by:

$$W_{(tot)} = W_{(original)} + E \cdot f$$

NOTE 1 - Reverse Recovery Loss by Measurement

This device has a low reverse recovered charge and peak reverse recovery current. When measuring the charge, care must be taken to ensure that:

(a) AC coupled devices such as current transformers are not affected by prior passage of high amplitude forward current.

(b) A suitable, polarised, clipping circuit must be connected to the input of the measuring oscilloscope to avoid overloading the internal amplifiers by the relatively high amplitude forward current signal.

(c) Measurement of reverse recovery waveform should be carried out with an appropriate critically damped snubber, connected across diode anode to cathode. The formula used for the calculation of this snubber is shown below:

$$R^2 = 4 \cdot \frac{V_r}{C_s \cdot {di}/{dt}}$$

Where: V_r = Commutating source voltage
C_S = Snubber capacitance
R = Snubber resistance

5.0 Computer Modelling Parameters

5.1 Device Dissipation Calculations

$$I_{AV} = \frac{-V_{T0} + \sqrt{V_{T0}^{\ 2} + 4 \cdot ff^2 \cdot r_T \cdot W_{AV}}}{2 \cdot ff^2 \cdot r_T}$$

Where V_{T0} =2.072V, r_T =1.166mΩ

ff = form factor (normally unity for fast diode applications)

$$W_{AV} = \frac{\Delta T}{R_{th}}$$

$$\Delta T = T_{j(MAX)} - T_K$$

5.2 Calculation of V_F using ABCD Coefficients

The forward characteristic I_F Vs V_F, on page 6 is represented in two ways;

(i) the well established V_{T0} and r_T tangent used for rating purposes and

(ii) a set of constants A, B, C, and D forming the coefficients of the representative equation for V_F in terms of I_F given below:

$$V_F = A + B \cdot \ln(I_F) + C \cdot I_F + D \cdot \sqrt{I_F}$$

The constants, derived by curve fitting software, are given in this report for both hot and cold characteristics. The resulting values for V_F agree with the true device characteristic over a current range, which is limited to that plotted.

	25°C Coefficients	140°C Coefficients
A	0.3115327	0.2510302
B	0.1752856	0.04514263
C	0.4877645×10^{-3}	0.4997541×10^{-3}
D	0.04849651	0.06512479

Curves

Figure 1 – Forward characteristics of limit device

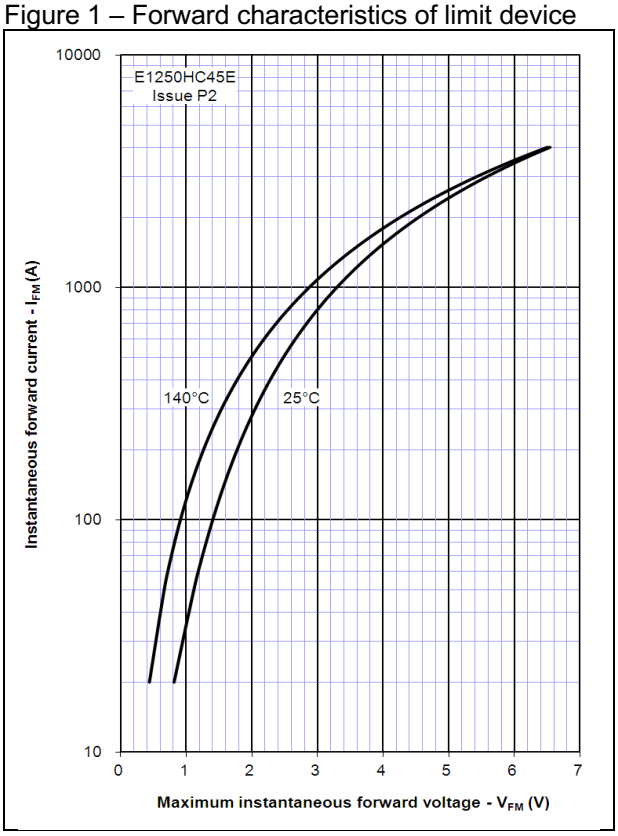

Figure 2 – Maximum forward recovery voltage

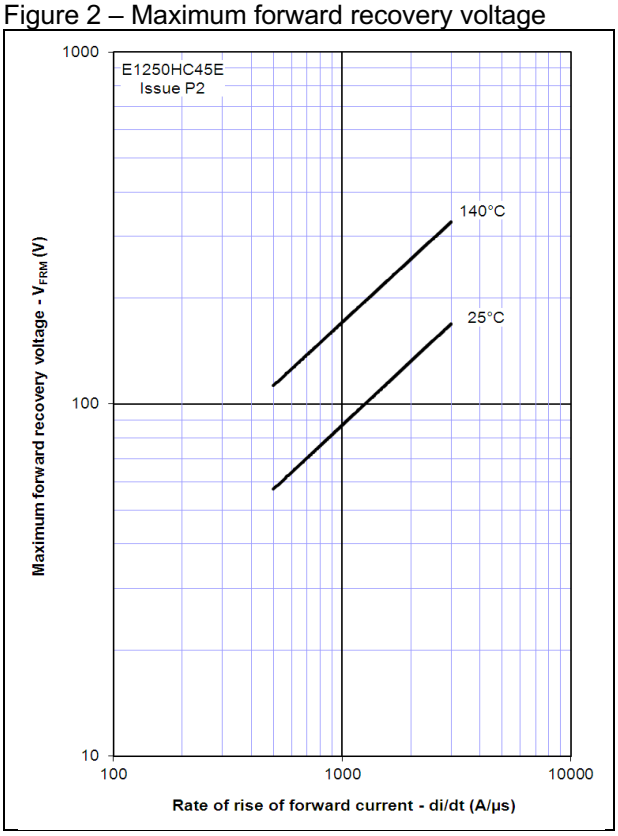

Figure 3 – Maximum recovered charge, Q_{rr}

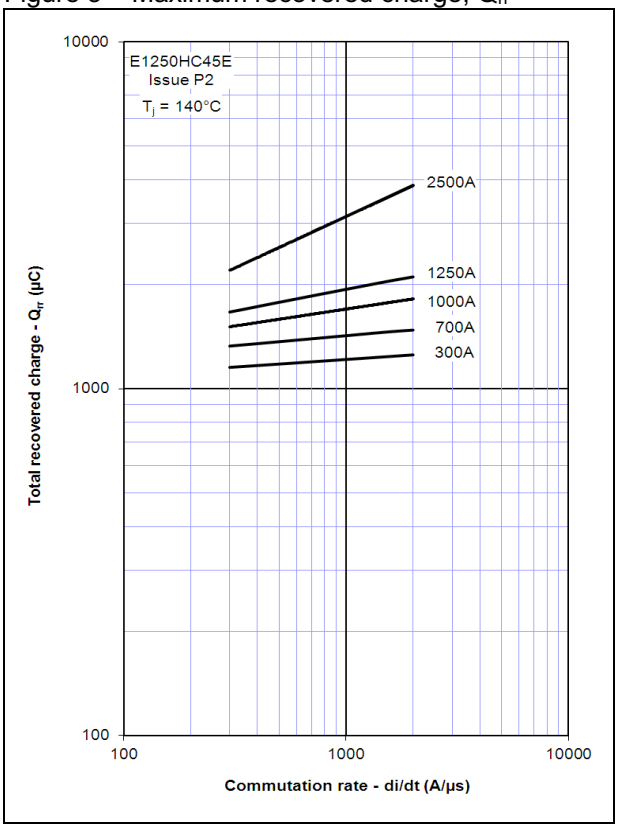

Figure 4 – Maximum recovery charge, Q_{ra} (50% chord)

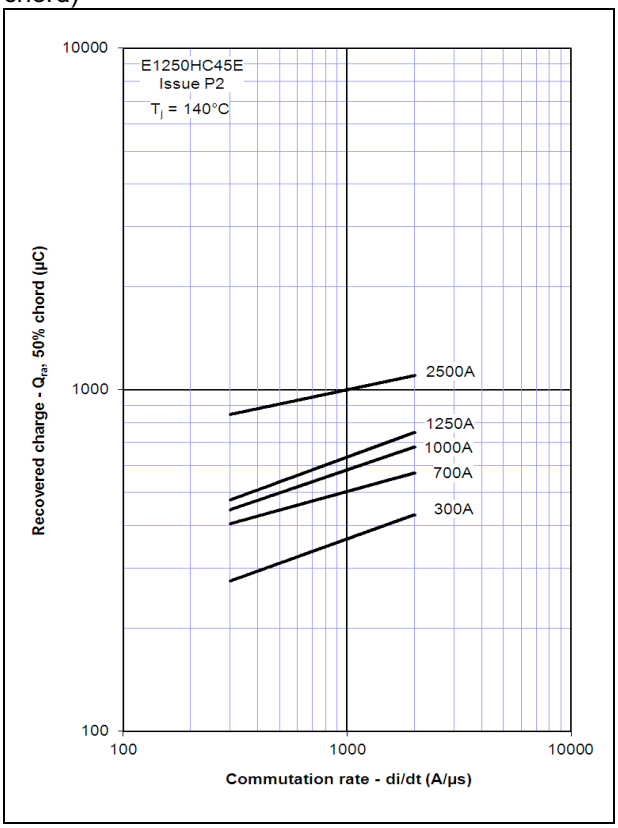

Figure 5 - Maximum reverse current, I_{rm}

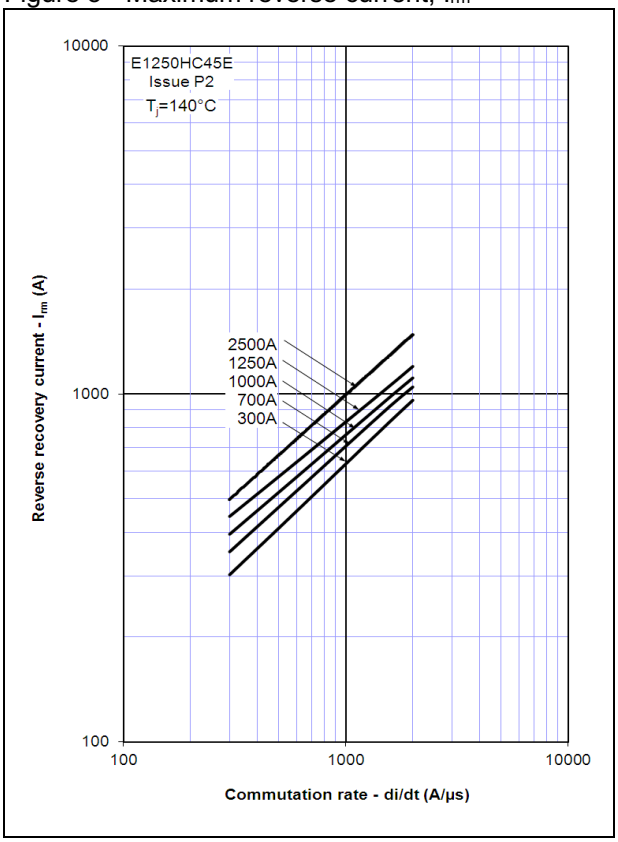

Figure 6 – Maximum recovery time, t_{rr} (50% chord)

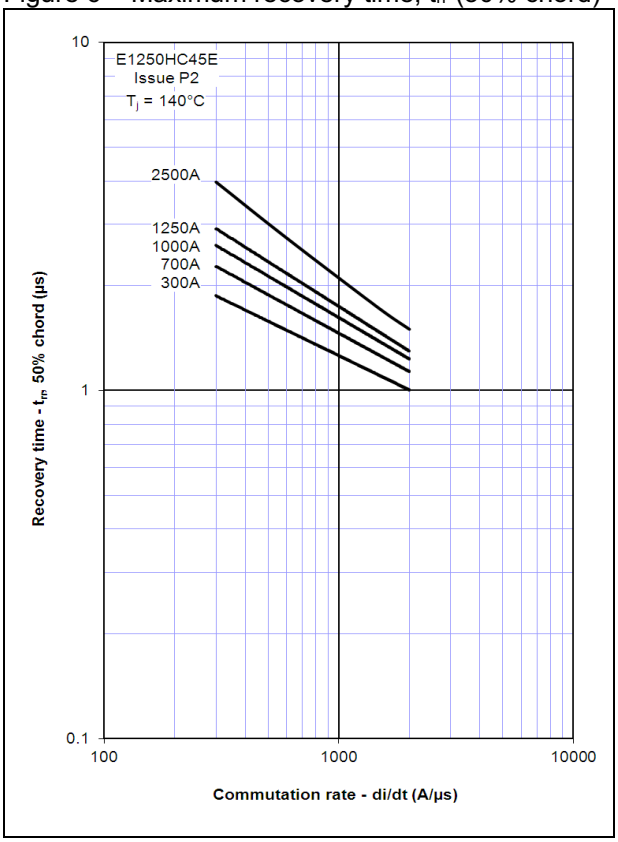

Figure 7 – Typical reverse recovery energy per pulse

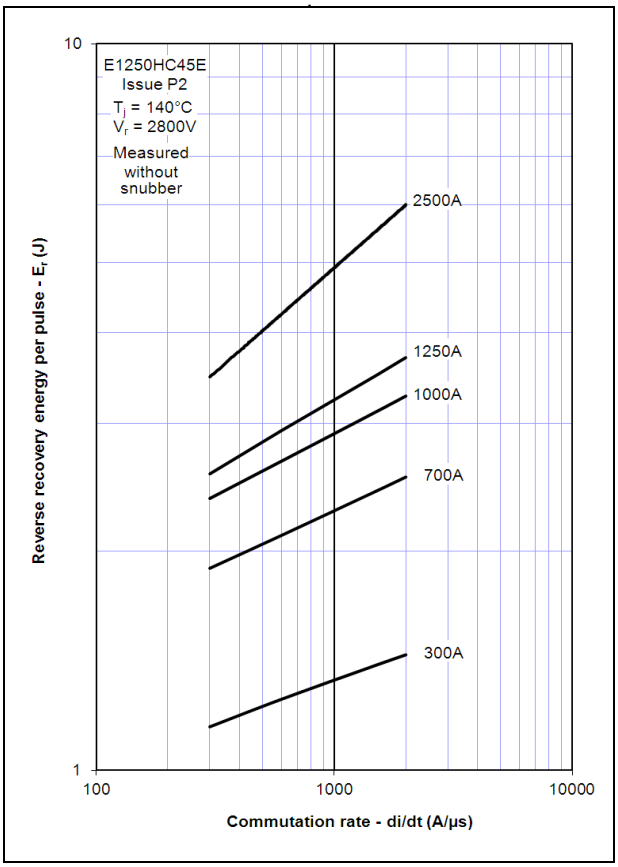

Figure 8 – Safe operating area

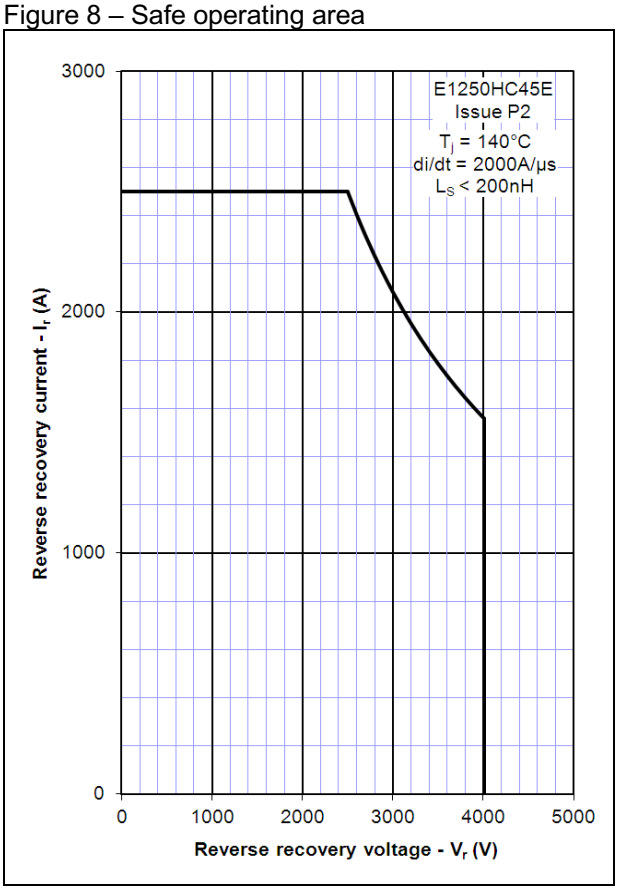

Figure 9 – Transient thermal impedance

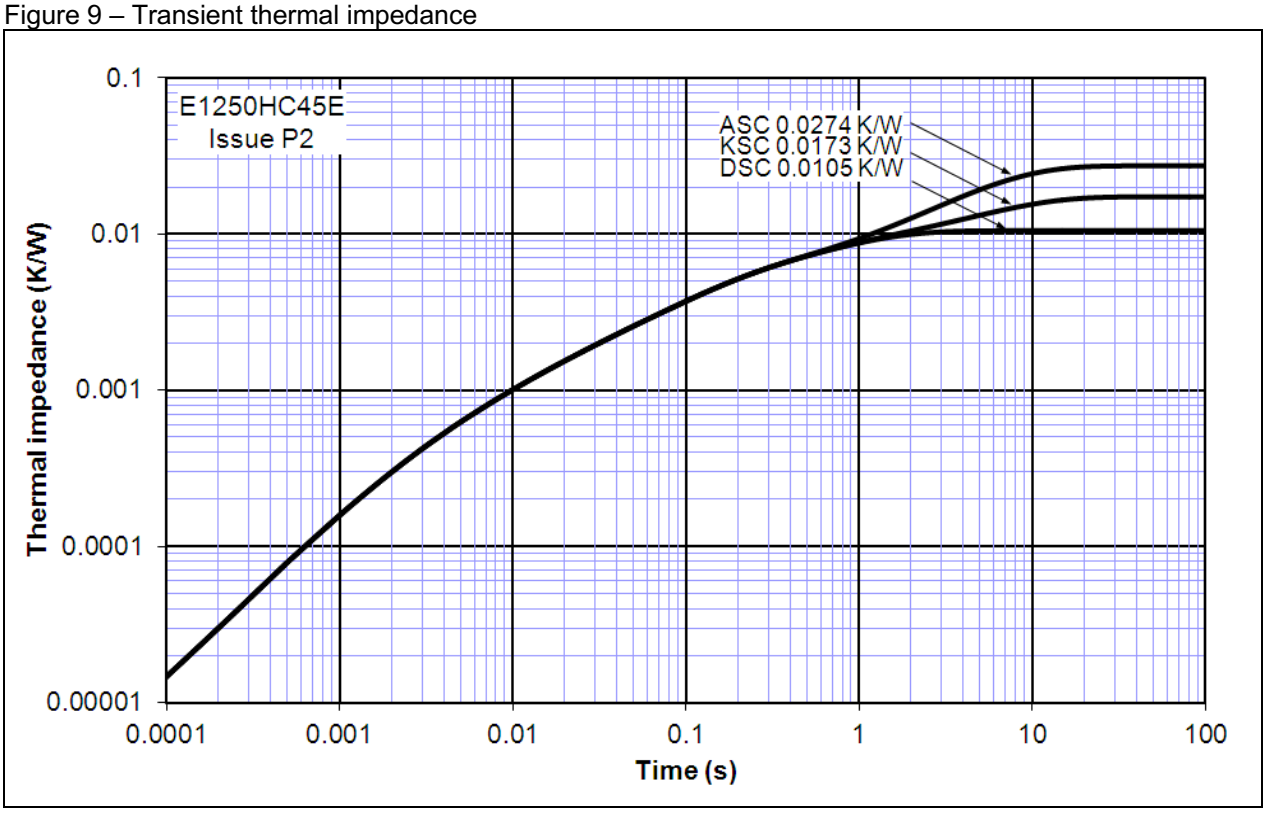

Figure 10 – Maximum surge and I^2t ratings

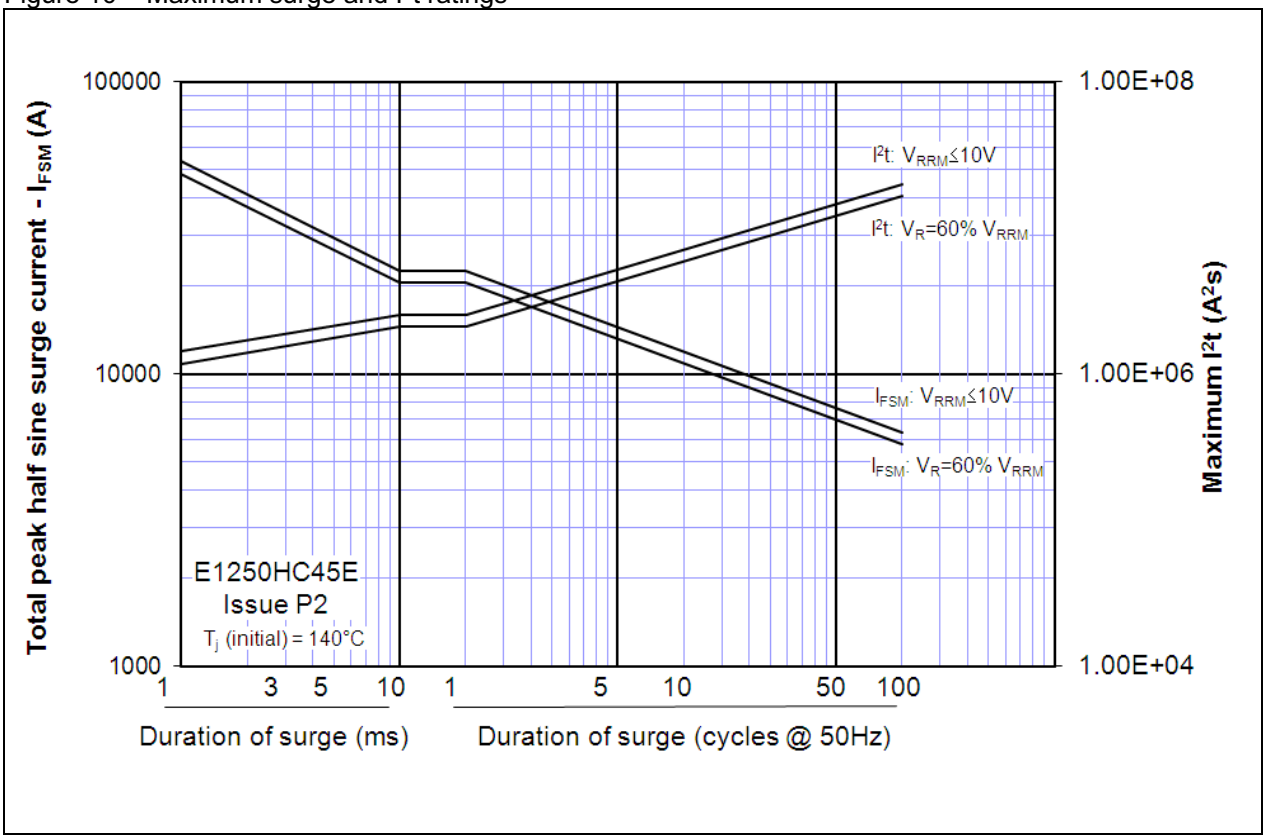

Outline Drawing & Ordering Information

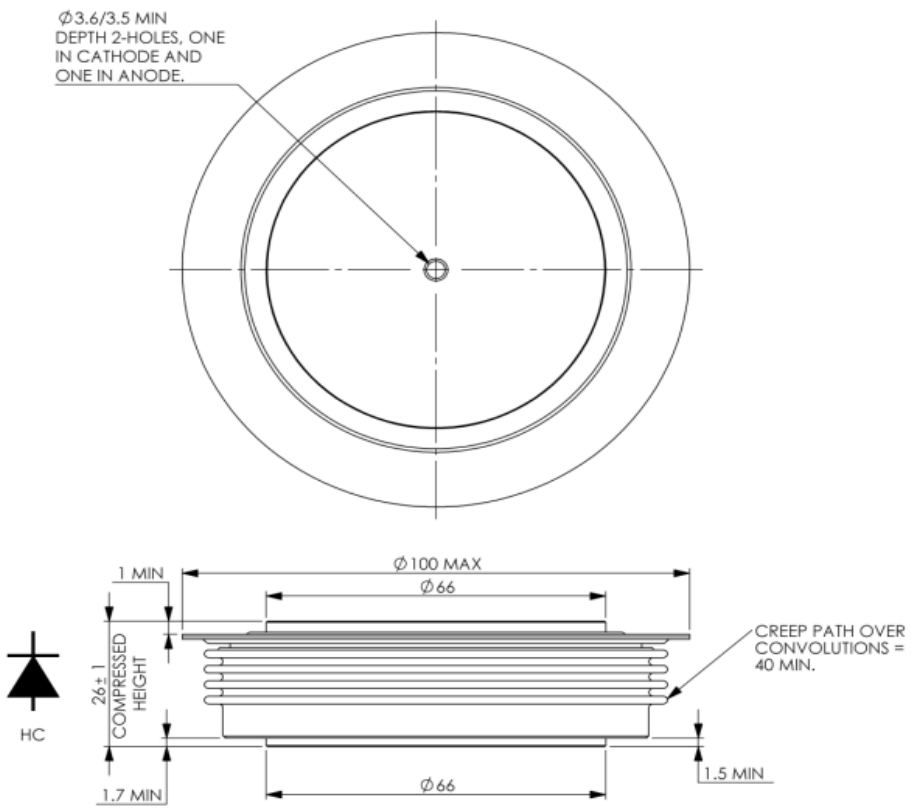

ORDERING INFORMATION		(Please quote 10 digit code as below)	
E1250	**HC**	**45**	**E**
Fixed Type Code	Fixed outline code	Fixed voltage code $V_{RRM}/100$ 45	Fixed code, product series

Order code: E1250HC45E – 4500V V_{RRM}, 26mm clamp height capsule.

IXYS Semiconductor GmbH
Edisonstraße 15
D-68623 Lampertheim
Tel: +49 6206 503-0
Fax: +49 6206 503-627
E-mail: marcom@ixys.de

IXYS Corporation
1590 Buckeye Drive
Milpitas CA 95035-7418
Tel: +1 (408) 457 9000
Fax: +1 (408) 496 0670
E-mail: sales@ixys.net

IXYS UK WESTCODE

www.ixysuk.com

www.ixys.net

IXYS UK Westcode Ltd
Langley Park Way, Langley Park,
Chippenham, Wiltshire, SN15 1GE.
Tel: +44 (0)1249 444524
Fax: +44 (0)1249 659448
E-mail: sales@ixysuk.com

IXYS Long Beach
IXYS Long Beach, Inc
2500 Mira Mar Ave, Long Beach
CA 90815
Tel: +1 (562) 296 6584
Fax: +1 (562) 296 6585
E-mail: service@ixyslongbeach.com

The information contained herein is confidential and is protected by Copyright. The information may not be used or disclosed except with the written permission of and in the manner permitted by the proprietors IXYS UK Westcode Ltd.

© IXYS UK Westcode Ltd.

In the interest of product improvement, IXYS UK Westcode Ltd reserves the right to change specifications at any time without prior notice.

Devices with a suffix code (2-letter, 3-letter or letter/digit/letter combination) added to their generic code are not necessarily subject to the conditions and limits contained in this report.

IXYS
A Littelfuse Technology

Disclaimer Notice - Information furnished is believed to be accurate and reliable. However, users should independently evaluate the suitability of and test each product selected for their own applications. Littelfuse products are not designed for, and may not be used in, all applications. Read complete Disclaimer Notice at www.littelfuse.com/disclaimer-electronics.