FlexSQUARE / LED EVS Beacon 853

LED EVS Beacon BWM 115-230VAC GN



Part No.: 853.220.60

MECHANICAL DATA	
Length	85 mm
Width	85 mm
Height	72 mm
Materials	PC PP-GF
Dome colour	Green
Housing colour	Black
Protection category	IP66 IP67
Connection	Screw terminals
cross-sectional area maximum	1,50mm² / 16AWG
Cable entry	Membrane grommet
Cable entry minimum	d = 1 mm d = 6 mm
Cable entry maximum	d = 12 mm d = 9 mm
Type of fixing	Base mounting Wall mounting
Working temperature minimum	-25°C
Working temperature maximum	+50°C
Weight with packaging	188 g
Product weight	157 g

ELECTRICAL DATA	
Operating voltage	115-230V
Operating voltage type	AC
Operating voltage frequency	50Hz at 230V 60Hz at 115V
Operating voltage tolerance	+/- 10%
Rated operational voltage	230 VAC
Rated operational current	160 mA
Rated inrush current	7.000 mA
Protection class	Protection class 2
Pollution degree	3
Overvoltage category	II
Isolation voltage	Ui = 250V; Uimp = 2.500V

OPTICAL DATA	
Light source	LED
Light colour	Green

! For additional installation and mounting information, refer to the appropriate user guide at www.werma.com. This printed copy is for information only and is subject to alteration.

FlexSQUARE / LED EVS Beacon 853

LED EVS Beacon BWM 115-230VAC GN

Optical signal image	EVS
Service life optical	50,000 h maximum

APPROVAL DATA	
Conforms with CE	Yes
Conforms with RoHS directive	Yes
WEEE	Yes
Conforms with ATEX-directive	No
Conforms with CCC	Yes
Conforms with UL	No
Conforms with FCC	No
Conforms with IC	No
EAC certificate available	Yes
Conforms with UKCA (Importer)	Yes (WERMA (UK) Ltd.)
Conforms with AS-I	No
ICAO Certification	No
Conforms with DNV	No
Conforms with RoHS CN	No
Conforms with VdS	No

! For additional installation and mounting information, refer to the appropriate user guide at www.werma.com. This printed copy is for information only and is subject to alteration.

FlexSQUARE / LED EVS Beacon 853

LED EVS Beacon BWM 115-230VAC GN

DRAWING

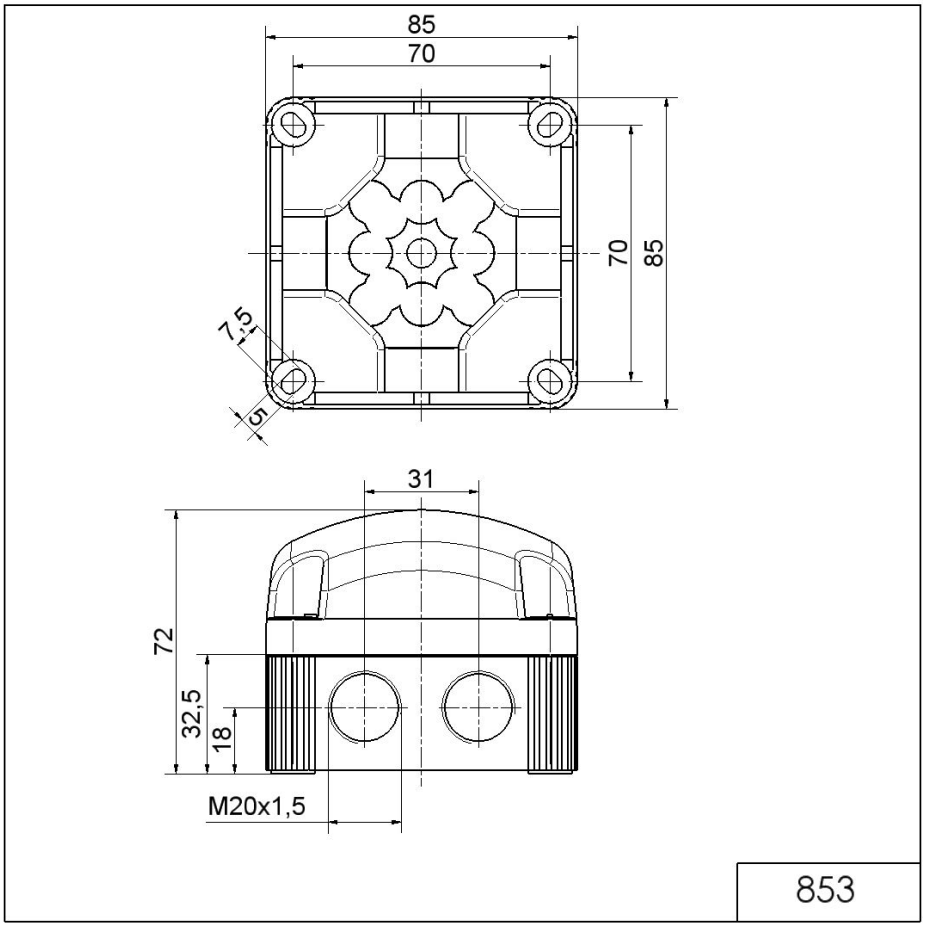

! For additional installation and mounting information, refer to the appropriate user guide at www.werma.com. This printed copy is for information only and is subject to alteration.