Power Resistor for Mounting Onto a Heatsink Thick Film Technology



FEATURES

- Compliant with requirement #26 of NF-EN45545-2
- High power rating: 500 W
- High overload capability up to 2 times rated power (see Energy Curve)
- Heatsink mounting
- Low thermal radiation of the case
- Material categorization: for definitions of compliance please see www.vishay.com/doc?99912

RoHS COMPLIANT

LINKS TO ADDITIONAL RESOURCES

3D Models

This range has been developed specifically for electrical traction applications and is capable of dissipating 500 W at +70 °C. The remarkable performance characteristics are evident when used in severe pulse conditions. The copper base allows easy mounting on the heatsink and provides optimal dissipation conditions.

DIMENSIONS in millimeters

RPS 500D

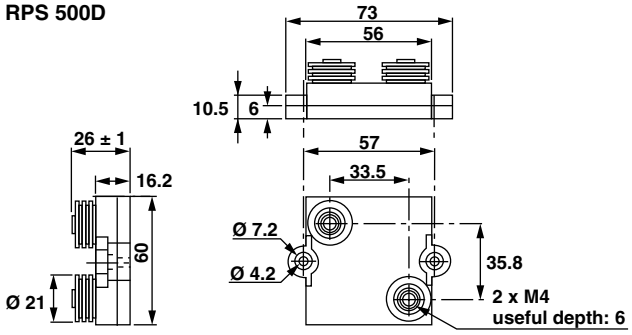

RPS 500A

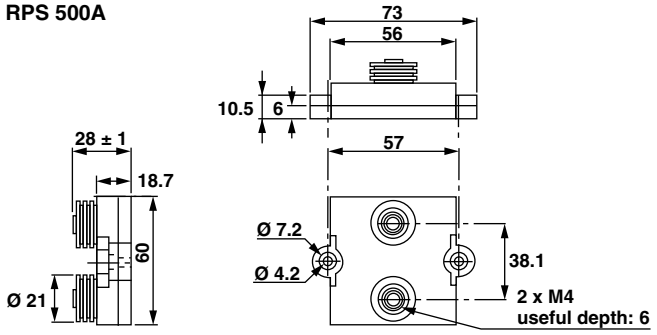

Note

- Tolerances unless stated: ± 0.2 mm

STANDARD ELECTRICAL SPECIFICATIONS

MODEL	SIZE	RESISTANCE RANGE Ω	RATED POWER $P_{25\,°C}$ W	LIMITING ELEMENT VOLTAGE U_L V	TOLERANCE ± %	TEMPERATURE COEFFICIENT ± ppm/°C
RPS 500	500	0.24 to 1M (1)	500	5000	1, 2, 5, 10	150

Note

(1) E24 series

MECHANICAL SPECIFICATIONS

Flammability	Insulated case and resin for potting UL 94 V-0
Resistive Element	Cermet
Substrate	Alumina onto base of nickel coated copper
End Connections	Screws M4 (M5 on request)
Weight	250 g ± 10 %
Tightening Torque on Connections	2 Nm
Tightening Torque on Heatsink	4 Nm

ENVIRONMENTAL SPECIFICATIONS

Temperature Range	-55 °C to +125 °C
Flammability	IEC 60695-11-5 Application time: t_a = 10 s Burning duration: t_b < 30 s

TECHNICAL SPECIFICATIONS

Rated Power (P_{70}) Chassis Mounted at 70 °C (Case Temperature)	500 W continuous load
Thermal Resistance of the Component	$R_{th\,(j-c)}$: 0.11 °C/W
Temperature Coefficient	± 300 ppm/°C < 1 Ω ± 150 ppm/°C > 1 Ω
Dielectric Strength	L: 7 kV_{RMS} - H: 12 kV_{RMS} MIL STD 202 Method 301: 1 min/10 mA max.
Insulation Resistance	> 10^6 MΩ under U_{ins} = 500 V_{DC} IEC 60115-1
Inductance	< 50 nH

For technical questions, contact: sferfixedresistors@vishay.com

THIS DOCUMENT IS SUBJECT TO CHANGE WITHOUT NOTICE. THE PRODUCTS DESCRIBED HEREIN AND THIS DOCUMENT ARE SUBJECT TO SPECIFIC DISCLAIMERS, SET FORTH AT www.vishay.com/doc?91000

PERFORMANCE		
TESTS	**CONDITIONS**	**REQUIREMENTS**
Momentary Overload	EN 60115-1 2 Pr / 10 s U_L = 5000 V	< ± (0.25 % + 0.05 Ω)
Rapid Temperature Change	IEC 60115-1 / IEC60068-2-14 Test Na 5 cycles, -55 °C to +125 °C	< ± (0.25 % + 0.05 Ω)
Load Life	IEC 60115-1 Pr (i.e. 500 W) / 1000 h / 70 °C (no cycling) (1)	< ± (0.5 % + 0.05 Ω)
Humidity (Steady State)	MIL STD 202 Method 103 B and D 56 days, 95 % RH / 40 °C	< ± (0.5 % + 0.05 Ω)

Note

(1) Resistors are not tested and guaranteed in cycling conditions

RESISTANCE VALUE IN RELATION TO TOLERANCE AND TCR		
Resistance Values	< 1 Ω	> 1 Ω
Standard Tolerances	± 5 %	
Standard TCR (-55 °C to +125 °C)	± 300 ppm/°C	± 150 ppm/°C
Tolerance on Request	± 1 %, ± 2 %, 10 %	

RECOMMENDATIONS FOR MOUNTING ONTO A HEATSINK

- Surfaces in contact must be carefully cleaned.
- The heatsink must have an acceptable flatness: From 0.05 mm to 0.1 mm/100 mm.
- Roughness of the heatsink must be around 6.3 µm. In order to improve thermal conductivity, surfaces in contact (alumina, heatsink) are coated with a silicone grease (type SI 340 from Rhône-Poulenc or Dow 340 from Dow Corning).
- The fastening of the resistor to the heatsink is under pressure control of two screws tightened at 4 Nm for full power availability.

Tightening Torque on Heatsink	**RPS 500**
	4 Nm

- The following accessories are supplied with each product: 2 off CHC M4 x 16/16 class 8.8 for heatsink mounting, 2 off TH M4 x 6/6 and 2 M4 contact lock washers for connections.

CHOICE OF THE HEATSINK

The user must choose according to the working conditions of the component (power, room temperature).
Maximum working temperature must not exceed 125 °C.
The dissipated power is simply calculated by the following ratio:

$$P = \frac{\Delta T}{[R_{th\ (j-c)}] + [R_{th\ (c-h)}] + [R_{th\ (h-a)}]}$$

P: Expressed in W

ΔT: Difference between maximum working temperature and room temperature

$R_{th\ (j-c)}$: Thermal resistance value measured between resistive layer and outer side of the resistor. It is the thermal resistance of the component: 0.11 °C/W.

$R_{th\ (c-h)}$: Thermal resistance value measured between outer side of the resistor and upper side of the heatsink. This is the thermal resistance of the interface (grease, thermal pad), and the quality of the fastening device.

$R_{th\ (h-a)}$: Thermal resistance of the heatsink.

For technical questions, contact: sferfixedresistors@vishay.com
THIS DOCUMENT IS SUBJECT TO CHANGE WITHOUT NOTICE. THE PRODUCTS DESCRIBED HEREIN AND THIS DOCUMENT ARE SUBJECT TO SPECIFIC DISCLAIMERS, SET FORTH AT www.vishay.com/doc?91000

OVERLOADS

Short time overload: 2 Pr/10 s
Accidental overload: The values indicated in the graph below are applicable to resistors in air or mounted onto a heatsink.

MARKING

Model, style, resistance value (in Ω), tolerance (in %), manufacturing date, Vishay Sfernice trademark.

ENERGY CURVE

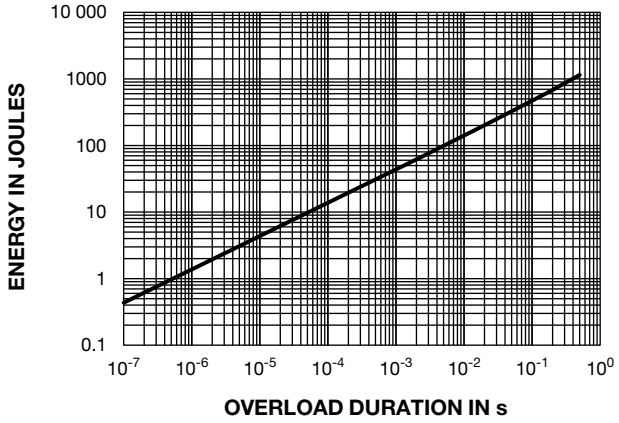

POWER CURVE

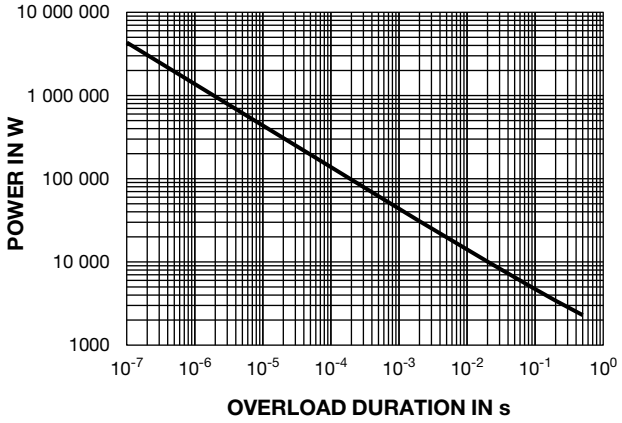

POWER RATING

The heatsink temperature should be maintained at the values specified in fig. 2.
To optimize the thermal conduction, contacting surfaces should be coated with silicone grease and heatsink mounting screws tightened to 4 Nm.

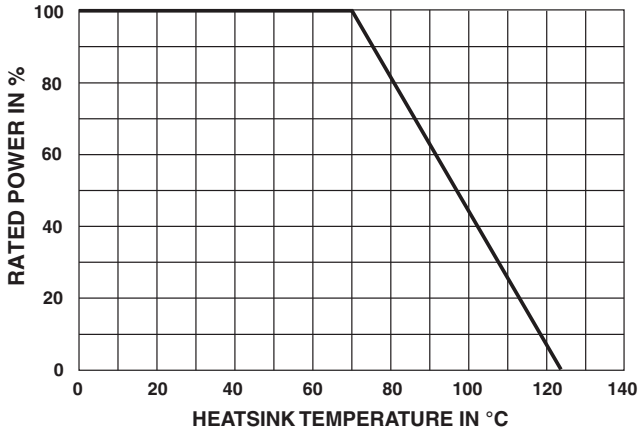

PACKAGING
Box of 15 units

For technical questions, contact: sferfixedresistors@vishay.com
THIS DOCUMENT IS SUBJECT TO CHANGE WITHOUT NOTICE. THE PRODUCTS DESCRIBED HEREIN AND THIS DOCUMENT ARE SUBJECT TO SPECIFIC DISCLAIMERS, SET FORTH AT www.vishay.com/doc?91000

ORDERING INFORMATION

RPS	500	DH	100 kΩ	± 10 %	xxx	BO15	e
MODEL	STYLE	CONNECTIONS optional **H**: dielectric strength 12 kV **L**: dielectric strength 7 kV	RESISTANCE VALUE	TOLERANCE ± 1 % ± 2 % ± 5 % ± 10 %	CUSTOM DESIGN optional on request: special TCR, shape etc.	PACKAGING	LEAD (Pb)-FREE

GLOBAL PART NUMBER INFORMATION

R	P	S	0	5	0	0	D	H	4	7	R	0	J	B	

GLOBAL MODEL	STYLE	DIELECTRIC	OHMIC VALUE	TOLERANCE	PACKAGING	SPECIAL
RPS0500	**D** = diagonal connections **A** = straight connections	**H**: dielectric strength 12 kV **L**: dielectric strength 7 kV	The first four digits are significant figures and the last digit specifies the number of zeros to follow. R designates decimal point. **48R7** = 48.7 Ω **47R0** = 47 Ω **1001** = 1 kΩ **4R70** = 4.7 Ω **R240** = 0.24 Ω	**F** = 1 % **G** = 2 % **J** = 5 % **K** = 10 %	B = box 15 pieces N = box 15 pieces N/A (1 to 14 pieces by box)	As applicable ZAx.

RELATED DOCUMENTS

APPLICATION NOTES	
Potentiometers and Trimmers	www.vishay.com/doc?51001
Guidelines for Vishay Sfernice Resistive and Inductive Components	www.vishay.com/doc?52029

For technical questions, contact: sferfixedresistors@vishay.com

THIS DOCUMENT IS SUBJECT TO CHANGE WITHOUT NOTICE. THE PRODUCTS DESCRIBED HEREIN AND THIS DOCUMENT ARE SUBJECT TO SPECIFIC DISCLAIMERS, SET FORTH AT www.vishay.com/doc?91000

Disclaimer

ALL PRODUCT, PRODUCT SPECIFICATIONS AND DATA ARE SUBJECT TO CHANGE WITHOUT NOTICE TO IMPROVE RELIABILITY, FUNCTION OR DESIGN OR OTHERWISE.

Vishay Intertechnology, Inc., its affiliates, agents, and employees, and all persons acting on its or their behalf (collectively, “Vishay”), disclaim any and all liability for any errors, inaccuracies or incompleteness contained in any datasheet or in any other disclosure relating to any product.

Vishay makes no warranty, representation or guarantee regarding the suitability of the products for any particular purpose or the continuing production of any product. To the maximum extent permitted by applicable law, Vishay disclaims (i) any and all liability arising out of the application or use of any product, (ii) any and all liability, including without limitation special, consequential or incidental damages, and (iii) any and all implied warranties, including warranties of fitness for particular purpose, non-infringement and merchantability.

Statements regarding the suitability of products for certain types of applications are based on Vishay's knowledge of typical requirements that are often placed on Vishay products in generic applications. Such statements are not binding statements about the suitability of products for a particular application. It is the customer's responsibility to validate that a particular product with the properties described in the product specification is suitable for use in a particular application. Parameters provided in datasheets and / or specifications may vary in different applications and performance may vary over time. All operating parameters, including typical parameters, must be validated for each customer application by the customer's technical experts. Product specifications do not expand or otherwise modify Vishay's terms and conditions of purchase, including but not limited to the warranty expressed therein.

Hyperlinks included in this datasheet may direct users to third-party websites. These links are provided as a convenience and for informational purposes only. Inclusion of these hyperlinks does not constitute an endorsement or an approval by Vishay of any of the products, services or opinions of the corporation, organization or individual associated with the third-party website. Vishay disclaims any and all liability and bears no responsibility for the accuracy, legality or content of the third-party website or for that of subsequent links.

Except as expressly indicated in writing, Vishay products are not designed for use in medical, life-saving, or life-sustaining applications or for any other application in which the failure of the Vishay product could result in personal injury or death. Customers using or selling Vishay products not expressly indicated for use in such applications do so at their own risk. Please contact authorized Vishay personnel to obtain written terms and conditions regarding products designed for such applications.

No license, express or implied, by estoppel or otherwise, to any intellectual property rights is granted by this document or by any conduct of Vishay. Product names and markings noted herein may be trademarks of their respective owners.

© 2024 VISHAY INTERTECHNOLOGY, INC. ALL RIGHTS RESERVED