Datasheet

BL652-SA and BL652-SC

Version 4.1

Revision History

Ver.	Date	Notes	Contributor(s)	Approver
1.0	20 July 2016	Initial Release		Jonathan Kaye
1.1	30 Aug 2016	Corrected Operating Temperature voltage to read VCC 1.8 V-3.6 V rather than 1.7 V-3.6V Corrected minor formatting issues and typo Changed the SIO_02 pin # (OTA mode table) to 23 vs. 21		Raj Khatri
1.2	02 Sept 2016	Added missing BT SIG info Updated Declaration of Conformity Added text to Note 1 of Pin Definition Notes Fixed error in Note 13 of Pin Definition Notes		Jonathan Kaye/ Raj Khatri
1.3	14 Sept 2016	Updated BT SIG section		Jonathan Kaye
1.4	14 Oct 2016	Updates to JTAG Signals and wiring		Raj Khatri
1.5	15 Nov 2016	Fix SIO_12 reference to SIO_02 in vSP Command Mode		Raj Khatri
1.6	14 Feb 2017	Fixed UART Interface pins in Table 20		Mark Duncombe
1.7	06 Mar 2017	Updated Standby Doze references from 1.2 uA to 2.0 uA		Raj Khatri
1.8	29 June 2017	Added X-Y-Z indication to Updated DoC with new RED standards		Raj Khatri
1.9	28 July 2017	Updated Ble_avg calculation in section 4.2 Measured Current Waveforms during Advertising and Connection		Raj Khatri
2.0	18 Sept 2017	Updated tables 21, 22, and 23 to include SIO pins		Raj Khatri
2.1	10 Oct 2017	Added the mFlexPIFA antenna information		Bill Steinike
2.2	23 Oct 2017	Changed all BT4.2 references to BTv5.0 Updated the BT SIG section		Jonathan Kaye
2.3	26 Oct 2017	Removed *Internal pull-down* from Pin 21 row.		Raj Khatri
2.4	18 Dec 2017	Removed references to mFlexPIFA antenna (P/N 001-0030)		Jonathan Kaye
2.5	20 Dec 2017	Updated antenna types to FlexPIFA and Flexible Notch		Jonathan Kaye
2.6	16 Mar 2018	Added new Walsin antenna to MIC antenna table Updated to new template	Maggie Teng	Jonathan Kaye
2.7	30 July 2018	Updated IC section	Maggie Teng	Jonathan Kaye
2.8	10 Dec 2018	Added KC certification	Maggie Teng	Jonathan Kaye
2.9	29 Apr 2019	Added NCC certification information	Maggie Teng	Jonathan Kaye
3.0	11 Dec 2020	Updated all regulatory information	Ryan Urness Maggie Teng	Jonathan Kaye
3.1	13 Jan 2021	Moved regulatory information to Regulatory Info document	Sue White	Jonathan Kaye
3.2	22 Jun 2021	Added note about BL651 footprint compatibility Fixed error in Table 5 (changed “Output set low” to “Output set high”	Raj Khatri	Jonathan Kaye
3.3	14 Oct 2021	Updated Table 28 (removed unnecessary row)	Raj Khatri	Jonathan Kaye
3.4	10 Aug 2023	Updated Tape and Reel Package Information section	Robert Gosewehr	Dave Drogowski
3.5	20 Oct 2023	Added missing BLE 2Mbps.	Raj Khatri	Jonathan Kaye
3.6	25 July 2024	Updated MSL to MSL4	Dave Drogowski	Jonathan Kaye
3.7	6 Nov 2024	Updates to Bluetooth SIG Qualification.	Dave Drogowski	Jonathan Kaye
4.0	24 Jan 2025	Ezurio rebranding	Sue White	Dave Drogowski
4.1	27 Oct 2025	Fixed last erroneous MSL listing (updated to MSL4).	Dave Drogowski	Dave Drogowski

© Copyright 2025 Ezurio
All Rights Reserved

Contents

1 Overview and Key Features 5
1.1 Features and Benefits 5
1.2 Application Areas 5
2 Specifications 6
3 Hardware Specifications 9
3.1 Block Diagram and Pin-out 9
3.2 Pin Definitions 10
3.3 Electrical Specifications 15
3.3.1 Absolute Maximum Ratings 15
3.3.2 Recommended Operating Parameters 15
3.3.3 nAutoRUN Pin and Operating Modes 17
3.3.4 OTA (Over-the-Air) *smart*BASIC Application Download 18
4 Power Consumption 19
4.1 Power Consumption 19
4.2 Measured Current Waveforms during Advertising and Connection 21
4.3 Peripheral Block Current Consumption 33
5 Functional Description 34
5.1 Power Management (includes Brown-out and Power on Reset) 34
5.2 Clocks and Timers 34
5.2.1 Clocks 34
5.2.2 Timers 34
5.3 Memory for *smart*BASIC Application Code 34
5.4 Radio Frequency (RF) 35
5.5 NFC 35
5.5.1 Use Cases 35
5.6 UART Interface 35
5.7 SPI Bus 36
5.8 I2C Interface 37
5.9 General Purpose I/O, ADC, PWM and FREQ 37
5.9.1 GPIO 37
5.9.2 ADC 37
5.9.3 PWM Signal Output on up to 12 SIO Pins 37
5.9.4 FREQ Signal Output on up to 2 SIO Pins 38
5.10 nRESET pin 38
5.11 nAutoRUN pin 38
5.12 vSP Command Mode 38
5.13 Two-wire Interface JTAG 39
5.14 BL652 Wakeup 41

© Copyright 2025 Ezurio
All Rights Reserved

5.14.1 Waking Up BL652 from Host 41
5.15 Low Power Modes 41
5.16 Temperature Sensor 41
5.17 Random Number Generator 41
5.18 AES Encryption/Decryption 41
5.19 Optional External Serial (SPI) Flash 41
5.20 Optional External 32.768 kHz crystal 42
5.21 BL652-SA On-board Chip Antenna Characteristics 44
6 Hardware Integration Suggestions 45
6.1 Circuit 45
6.2 PCB Layout on Host PCB - General 46
6.3 PCB Layout on Host PCB for BL652-SA 46
6.3.1 Antenna Keep-out on Host PCB 46
6.3.2 Antenna Keep-out and Proximity to Metal or Plastic 47
6.4 External Antenna Integration with BL652-SC 48
7 Mechanical Details 49
7.1 BL652 Mechanical Details 49
7.2 Host PCB Land Pattern and Antenna Keep-out for BL652-SA 50
8 Application Note for Surface Mount Modules 51
8.1 Introduction 51
8.2 Shipping 51
1.1.1 Tape and Reel Package Information 51
8.2.1 Package Specification 52
8.2.2 Module Orientation in Cavity 53
8.2.3 Labeling 53
8.3 Reflow Parameters 55
9 Regulatory 57
10 Ordering Information 57
11 Bluetooth SIG Qualification 58
11.1 Overview 58
11.2 Scope 58
11.3 Qualification Steps When Referencing a single existing design, (unmodified) – Option 1 in the QPRDv3 58
11.4 Example Designs for reference 59
11.5 Qualify More Products 59
12 Additional Information 60

© Copyright 2025 Ezurio
All Rights Reserved

1 Overview and Key Features

Every BL652 Series module is designed to enable OEMs to add single-mode Bluetooth Low Energy (BLE) v5.0 to small, portable, power-conscious devices. The BL652 modules are supported with Ezurio's *smart*BASIC, an event-driven programming language that enables OEMs to make their BLE product development quicker and simpler, significantly reducing time to market. *smart*BASIC enables customers to develop a complete embedded application inside the compact BL652 hardware, connecting to a wide array of external sensors via its I2C, SPI, UART, ADC or GPIO interfaces. The BL652 also provides flexibility in the OEM's application development choice with full support for using Nordic's SDK and firmware tools.

Based on the world-leading Nordic Semiconductor nRF52832 chipset, the BL652 modules provide ultra-low power consumption with outstanding wireless range via 4 dBm of transmit power. A broad range of BLE profiles including Temperature and Heart Rate are available, and *smart*BASIC provides the ideal mechanism to support any BLE profile development of your choice. This document should be read in conjunction with the *smart*BASIC user manual.

In addition, the BL652 series is 100% PCB footprint **drop-in compatible** with the BL651 series of modules.

Note: BL652 hardware is functionally capable as the nRF52832 chipset used in the module design. Not all features are currently exposed within Ezurio's *smart*BASIC firmware implementation.

1.1 Features and Benefits

- Bluetooth v5.0 – Single mode
- NFC-A Listen mode compliant
- External or internal antennas
- *smart*BASIC programming language or Nordic SDK
- Compact footprint
- Programmable Tx power +4 dBm to -20 dBm
- Tx whisper mode (-40 dBm)
- Rx sensitivity: -96 dBm
- Ultra-low power consumption
- Tx: 5.3 mA peak (at 0 dBm, DCDC on) – See *Power Consumption* section Note 1
- Rx: 5.4 mA peak (DCDC on) – See *Power Consumption* section Note 1
- Standby Doze: 2.0 uA typical
- Deep Sleep: 0.4 uA – See *Power Consumption* section Note 4
- UART, GPIO, ADC, PWM, FREQ output, timers, I2C, and SPI interfaces
- Fast time-to-market
- FCC, EU, ISED, Korea, and Japan certified; Full Bluetooth Declaration ID
- Other regulatory certifications on request (all certifications are in process)
- No external components required
- Industrial temperature range (-40 to + 85)

1.2 Application Areas

- Medical devices
- Wellness devices
- iOS "appcessories"
- Fitness sensors
- Location awareness
- Home automation

Note: Figures on this page are gathered from the nRF52 datasheet provided by Nordic.

© Copyright 2025 Ezurio
All Rights Reserved

2 Specifications

Table 1: BL652 Specifications

Categories	Feature	Implementation
Wireless Specification	Bluetooth®	• V5.0 – Single mode • 2x Speed (2M PHY support) – BT 5.0 • LE Advertising Extensions – BT 5.0 • Concurrent master and slave • BLE Mesh capabilities • Diffie-Hellman based pairing (LE Secure Connections) – BT 4.2 • Data Packet Length Extension – BT 4.2 • Link Layer Privacy (LE Privacy 1.2) – BT 4.2 • LE Dual Mode Topology – BT 4.1 • LE Ping – BT 4.1
	Frequency	2.402 - 2.480 GHz
	Maximum Transmit Power Setting	+4 dBm Conducted BL652-SA +4 dBm Conducted BL652-SC
	Minimum Transmit Power Setting	-20 dBm (in 4 dB steps) with *smart*BASIC command -16 dBm, -12 dBm, - 8 dBm, - 4 dBm, 0 dBm
	Tx Whisper Mode 1 Transmit Power	-40 dBm (min.) with *smart*BASIC command
	Receive Sensitivity (0.1% BER)	-96 dBm typical (BLE 1Mbps) -96 dBm typical (BLE 2Mbps)
	Link Budget	100 dB (@ BLE 1 Mbps) 97 dB (@ BLE 2 Mbps)
	Range	Up to 100 meters in free space
	Tx Whisper Modes	Range reduction feature with Tx Whisper modes via *smart*BASIC command
	Range (Tx Whisper Mode 1)	< ~100 cm
	Raw Data Rates	1 Mbps (over-the-air)
NFC	NFC-A Listen mode compliant	Based on NFC forum specification • 13.56 MHz • Date rate 106 kbps • NFC-A tag – Can only be a target/tag; cannot be an initiator **Modes of Operation:** • Disable • Sense • Activated **Use Cases:** • Touch-to-Pair with NFC • NFC enabled Out-of-Band Pairing
	System Wake-On-Field function	Proximity Detection
Host Interface and Peripherals	Total	32 x Multifunction I/O lines
	UART	Tx, Rx, CTS, RTS DCD, RI, DTR, DSR (See Note1) Default 115200,n,8,1 From 1,200bps to 1Mbps
	GPIO	Up to 32, with configurable:

© Copyright 2025 Ezurio
All Rights Reserved

Categories	Feature	Implementation
		I/O direction, O/P drive strength (standard 0.5 mA or high 3mA/5 mA), Pull-up /pull-down
	ADC	Eight 8/10/12-bit channels 0.6 V internal reference Configurable 4, 2, 1, 1/2, 1/3, 1/4, 1/5 1/6(default) pre-scaling Configurable acquisition time 3uS, 5uS, 10uS(default), 15uS, 20uS, 40uS. One-shot mode
	PWM output	PWM outputs on 12 GPIO output pins. PWM output duty cycle: 0%-100% PWM output frequency: Up to 500kHz (See Note 7)
	FREQ output	FREQ outputs on 2 GPIO output pins. FREQ output frequency: 0 MHz-4MHz (50% duty cycle)
	I2C	One I2C interface (up to 400 kbps) (See Note 2)
	SPI	One SPI Master interface (up to 4 Mbps) (See Note 3)
Optional ***External to the BL652 module***	External 32.768kHz crystal	For customer use, connect +/-20ppm accuracy crystal for more accurate protocol timing.
	External SPI serial flash	For customer use e.g. data-logging
Profiles	Services supported (See Note 4)	Ezurio's *smart*BASIC firmware supports the following:: • Central Mode • Peripheral Mode • Custom Series
	Nordic SDK v3x0	Any exposed within the related Nordic softdevice (application development to be done by OEM)
FW upgrade	*smart*BASIC runtime engine FW upgrade (See Note 4)	Via JTAG or UART
Programmability	*smart*BASIC	On-board programming language similar to BASIC.
	*smart*BASIC application download	Via UART Via Over-the-Air (if SIO_02 pin is pulled high externally)
	Nordic SDK	Via JTAG
Control Protocols	Any	User defined via *smart*BASIC
Operating Modes	Self-contained Run mode	Selected by nAutoRun pin status: LOW (0V). Then runs $autorun$ (*smart*BASIC application script) if it exists.
	Interactive/Development mode	HIGH (VCC). Then runs via at+run (and *file name* of *smart*BASIC application script).
Supply Voltage	Supply (VCC)	1.8- 3.6 V – Internal DCDC converter or LDO (See Note 5)
Power Consumption (See Note 5)	Active Modes Peak Current (for maximum Tx power +4 dBm) – Radio only	Advertising mode 7.5 mA peak Tx (with DCDC)
		Connecting mode 5.4 mA peak Tx (with DCDC)
	Active Modes Peak Current (for Tx Whisper mode2 power -40 dBm) – Radio only	Advertising mode 2.7 mA peak Tx (with DCDC)
		Connecting mode 5.4 mA peak Tx (with DCDC)
	Active Modes Average Current	Depends on many factors, see Power_Consumption
	Ultra Low Power Modes	Standby Doze 2.0 uA typical (Note 6)

© Copyright 2025 Ezurio
All Rights Reserved

Categories	Feature	Implementation
		Deep Sleep 400 nA (Note 6)
Antenna Options	Internal	Ceramic chip monopole antenna – on-board **BL652-SA variant**
	External	Dipole antenna (with IPEX connector) Dipole PCB antenna (with IPEX connector) Connection via IPEX MH4 – **BL652-SC variant** See the Antenna Information sections for FCC and ISED, MIC, and EU. (1, 2, 3)
Physical	Dimensions	14 mm x 10 mm x 2.1 (TBC) mm Pad Pitch: 0.75 mm Pad Type: Plated half-moon edge pads (easy to hand solder)
	Weight	<1 gram
Environmental	Operating	-40 °C to +85 °C (VCC 1.8V-3.6V)
	Storage	-40 °C to +85 °C
Miscellaneous	Lead Free	Lead-free and RoHS compliant
	Warranty	1-Year Warranty
Development Tools	Development Kit	Development kit (DVK-BL652-xx) and free software tools
Approvals	Bluetooth®	Full Bluetooth SIG Declaration ID
	FCC / ISED / EU / MIC / KC	All BL652 Series

Module Specification Notes:

Note 1	DSR, DTR, RI, and DCD can be implemented in the *smart*BASIC application.
Note 2	With I2C interface selected, pull-up resistors on I2C SDA and I2C SCL ***must*** be connected externally as per I2C standard.
Note 3	SPI interface (master) consists of SPI MOSI, SPI MISO, and SPI CLK. SPI CS is created by using any spare SIO pin within the *smart*BASIC application script allowing multi-dropping.
Note 4	The BL652 module comes loaded with *smart*BASIC runtime engine firmware but does not come loaded with any *smart*BASIC application script (as that is dependent on customer-end application or use). Ezurio provides many sample *smart*BASIC application scripts covering the services listed. Additional BLE services are being added every quarter.
Note 5	Use of the internal DCDC convertor or LDO is decided by the underlying BLE stack.
Note 6	These figures are measured on the BL652-Sx-xx. • Deep Sleep current for BL652-Sx-xx ~400nA (typical) • Standby Doze current for BL652-xx-A1 2.0 uA (typical)
Note 7	PWM output signal has a frequency and duty cycle property. PWM output is generated using dedicated hardware in the chipset. There is a trade-off between PWM output frequency and resolution. For example: • PWM output frequency of 500 kHz (2 uS) results in resolution of 1:2. • PWM output frequency of 100 kHz (10 uS) results in resolution of 1:10. • PWM output frequency of 10 kHz (100 uS) results in resolution of 1:100. • PWM output frequency of 1 kHz (1000 uS) results in resolution of 1:1000. Refer to the *smart*BASIC user guide for details. It's available from the Ezurio BL652 product page.

© Copyright 2025 Ezurio
All Rights Reserved

3 Hardware Specifications

3.1 Block Diagram and Pin-out

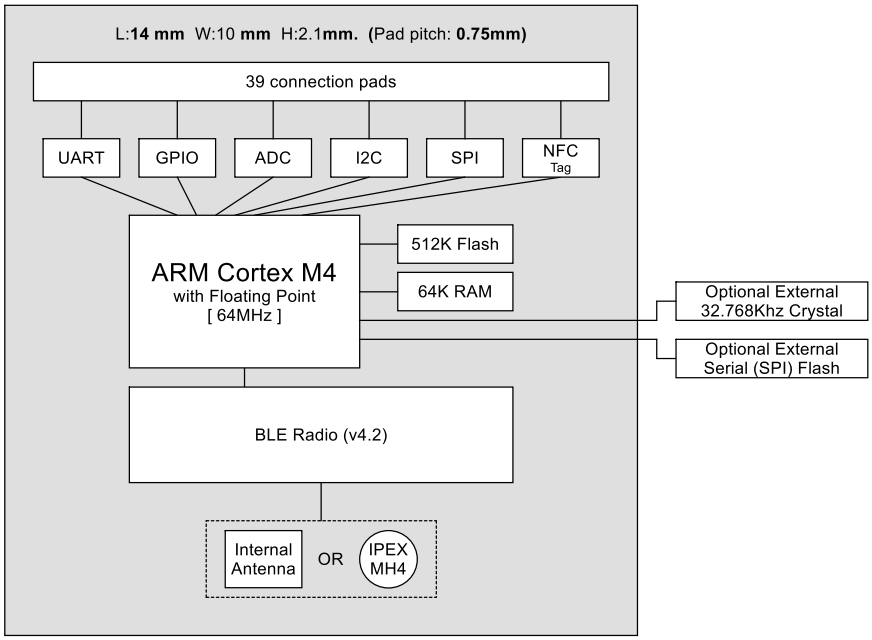

Figure 1: BL652 Block diagram

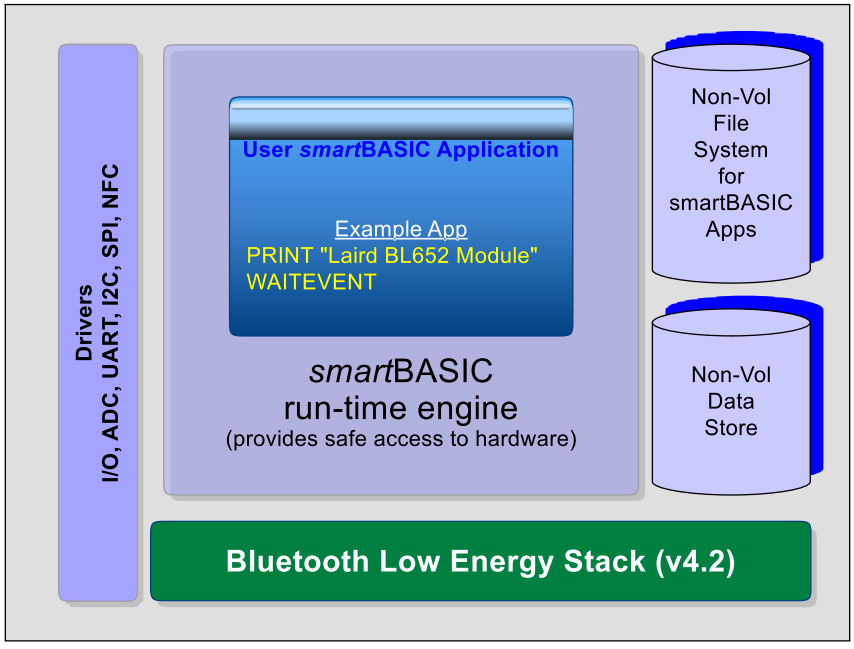

Figure 2: Functional HW and SW block diagram for BL652 series BLE smartBASIC module

© Copyright 2025 Ezurio
All Rights Reserved

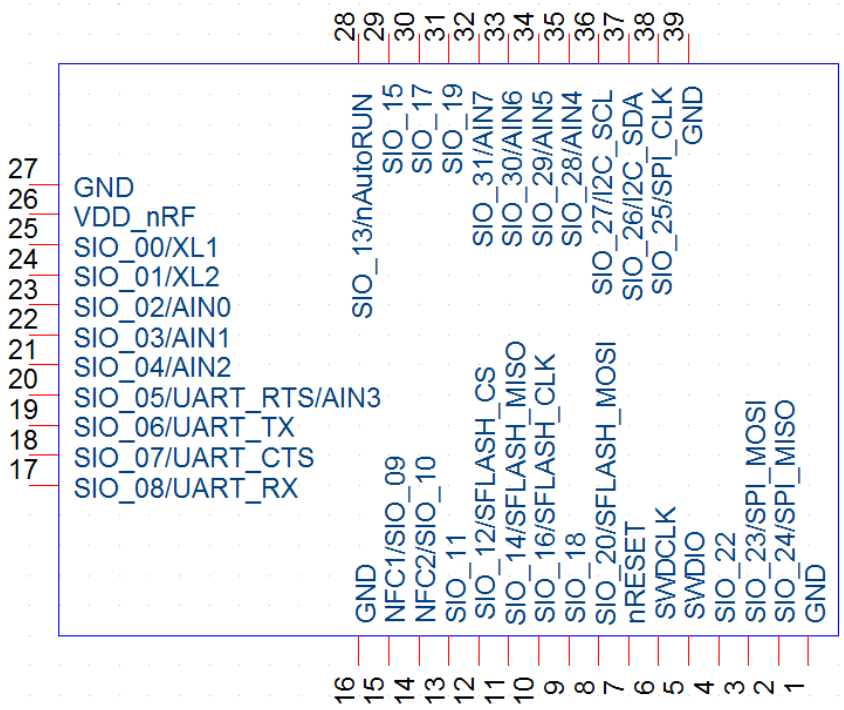

Figure 3: BL652-Sx module pin-out (top view)

3.2 Pin Definitions

Table 2: Pin definitions

Pin #	Pin Name	Default Function	Alternate Function	In/ Out	Pull Up/ Down	nRF52832 QFN Pin	nRF52832 QFN Name	Notes	Comment
1	GND	-	-	-	-	-	-		-
2	SIO_24/ SPI_MISO	SIO_24	SPI_MISO	IN	PULL-UP	29	PO.24		**Ezurio Devkit:** SPI EEPROM. SPI_Eeprom_MISO, Input. SPIOPEN() in *smart*BASIC selects SPI function; MOSI and CLK are outputs when in SPI master mode.
3	SIO_23/ SPI_MOSI	SIO_23	SPI_MOSI	IN	PULL-UP	28	PO.23		**Ezurio Devkit:** SPI EEPROM. SPI_Eeprom_MOSI, Output SPIOPEN() in *smart*BASIC selects SPI function, MOSI and CLK are outputs in SPI master.
4	SIO_22	SIO_22		IN	PULL-UP	27	PO.22		**Ezurio Devkit:** SPI EEPROM.

© Copyright 2025 Ezurio
All Rights Reserved

Pin #	Pin Name	Default Function	Alternate Function	In/ Out	Pull Up/ Down	nRF52832 QFN Pin	nRF52832 QFN Name	Notes	Comment
									SPI_Eeprom_CS, Input
5	SWDIO	SWDIO	-	-	PULL-UP	26	SWDIO		-
6	SWDCLK	SWDCLK	-	-	PULL-DOWN	25	SWDCLK		-
7	nRESET	nRESET	-	IN	PULL-UP	24	PO.21/ nRESET		System Reset (Active Low)
8	SIO_20/ SFLASH_MOSI	SIO_20	SFLASH_MOSI	IN	PULL-UP	23	PO.20		**Ezurio Devkit:** Optional External serial SPI flash for data logging purpose. High level API in *smart*BASIC can be used for fast access using open/close/read/write API functions.
9	SIO_18	SIO_18	-	IN	PULL-UP	21	PO.18		-
10	SIO_16/ SFLASH_CLK	SIO_16	SFLASH_CLK	IN	PULL-UP	19	PO.16		**Ezurio Devkit:** Optional External serial SPI flash for data logging purpose. High level API in *smart*BASIC can be used for fast access using open/close/read/write API functions.
11	SIO_14/ SFLASH_MISO	SIO_14	SFLASH_MISO	IN	PULL-UP	17	PO.14		
12	SIO_12/ SFLASH_CS	SIO_12	SFLASH_CS	IN	PULL-UP	15	PO.12		
13	SIO_11	SIO_11	-	IN	PULL-UP	14	PO.11		**Ezurio Devkit:** BUTTON1
14	NFC2/ SIO_10	NFC2	SIO_10	IN	-	12	PO.10/NFC2		-
15	NFC1/ SIO_09	NFC1	SIO_09	IN	-	11	PO.09/NFC1		-
16	GND	-	-	-	-	-	-		-
17	SIO_08/ UART_RX	SIO_08	UART_RX	IN	PULL-UP	10	PO.08		UARTCLOSE() selects DIO functionality UARTOPEN() selects UART COMMS behaviour
18	SIO_07/ UART_CTS	SIO_07	UART_CTS	IN	PULL-DOWN	9	PO.07		
19	SIO_06/ UART_TX	SIO_06	UART_TX	OUT	Set High in FW	8	PO.06		

© Copyright 2025 Ezurio
All Rights Reserved

Pin #	Pin Name	Default Function	Alternate Function	In/ Out	Pull Up/ Down	nRF52832 QFN Pin	nRF52832 QFN Name	Notes	Comment
20	SIO_05/ UART_RTS/ AIN3	SIO_05	UART_RTS/ AIN3	OUT	Set Low in FW	7	PO.05/AIN3		
21	SIO_04/ AIN2	SIO_04	AIN2	IN	PULL-UP	6	PO.04/AIN2		
22	SIO_03/ AIN1	SIO_03	AIN1	IN	PULL-UP	5	PO.03/AIN1		**Ezurio Devkit:** Temp Sens Analog or Arduino Analog
23	SIO_02/ AIN0	SIO_02	AIN0	IN	PULL-DOWN	4	PO.02/AIN0		Internal pull-down
24	SIO_01/ XL2	SIO_01	XL2	IN	PULL-UP	3	PO.01/XL2		**Ezurio Devkit:** Optional 32.768kHz crystal pad XL2
25	SIO_00/ XL1	SIO_00	XL1	IN	PULL-UP	2	PO.00/XL1		**Ezurio Devkit:** Optional 32.768kHz crystal pad XL1
26	VDD_nRF	-	-	-	-	-	-		1.7V to 3.6V
27	GND	-	-	-	-	-	-		-
28	SIO_13/ nAutoRUN	nAutoRUN	SIO_13	IN	PULL-DOWN	16	PO.13		**Ezurio Devkit:** FTDI USB_DTR via jumper on J12pin1-2.
29	SIO_15	SIO_15	-	IN	PULL-UP	18	PO.15		**Ezurio Devkit:** BUTTON2
30	SIO_17	SIO_17	-	IN	PULL-UP	20	PO.17		**Ezurio Devkit:** LED1
31	SIO_19	SIO_19	-	IN	PULL-UP	22	PO.19		**Ezurio Devkit:** LED2
32	SIO_31/ AIN7	SIO_31	AIN7	IN	PULL-UP	43	PO.31/AIN7		-
33	SIO_30/ AIN6	SIO_30	AIN6	IN	PULL-UP	42	PO.30/AIN6		-
34	SIO_29/ AIN5	SIO_29	AIN5	IN	PULL-UP	41	PO.29/AIN5		-
35	SIO_28/ AIN4	SIO_28	AIN4	IN	PULL-UP	40	PO.28/AIN4		-
36	SIO_27/ I2C_SCL	SIO_27	I2C_SCL	IN	PULL-UP	39	PO.27		**Ezurio Devkit:** I2C RTC chip. I2C clock line.
37	SIO_26/ I2C_SDA	SIO_26	I2C_SDA	IN	PULL-UP	38	PO.26		**Ezurio Devkit:** I2C RTC chip. I2C data line.
38	SIO_25/ SPI_CLK	SIO_25	SPI_CLK	IN	PULL-UP	37	PO.25		**Ezurio Devkit:** SPI EEPROM. SPI_Eeprom_CLK, Output

© Copyright 2025 Ezurio
All Rights Reserved

Pin #	Pin Name	Default Function	Alternate Function	In/ Out	Pull Up/ Down	nRF52832 QFN Pin	nRF52832 QFN Name	Notes	Comment
									SPIOPEN() in *smart*BASIC selects SPI function, MOSI and CLK are outputs when in SPI master mode.
39	GND	-	-	-	-	-	-		-

Pin Definition Notes:

Note 1	SIO = Signal Input or Output. Secondary function is selectable in *smart*BASIC application.
Note 2	DIO = Digital Input or Output. I/O voltage level tracks VCC.
Note 3	AIN = Analog Input
Note 4	DIO or AIN functionality is selected using the GpioSetFunc() function in *smart*BASIC.
Note 5	AIN configuration selected using GpioSetFunc() function.
Note 6	I2C, UART, SPI controlled by xxxOPEN() functions in *smart*BASIC.
Note 7	SIO_5 to SIO_8 are DIO by default when $autorun$ app runs on power-up.
Note 8	JTAG (two-wire SWD interface), pin 5 (SWDIO) and pin 6 (SWDCLK). Ezurio recommends you use JTAG (2-wire interface) to handle future BL652 module firmware upgrades. You MUST wire out the JTAG (2-wire interface) on your host design (see Figure 8, where four lines should be wired out, namely SWDIO, SWDCLK, GND and VCC). Firmware upgrades can still be performed over the BL652 UART interface, but this is slower (60 seconds using UART vs. 10 seconds when using JTAG) than using the BL652 JTAG (2-wire interface). Upgrading *smart*BASIC runtime engine firmware or loading the *smart*BASIC applications is done using the UART interface.
Note 9	Pull the nRESET pin (pin 7) low for minimum 100 milliseconds to reset the BL652.
Note 10	SPI CS is created by using any spare SIO pin within their *smart*BASIC application script allowing multi-dropping.
Note 11	The SIO_02 pin must be pulled high externally to enable an OTA (over-the-air) *smart*BASIC application download. Refer to the latest firmware release documentation for details.
Note 12	Ensure that SIO_02 (pin 23) and AutoRUN (pin 28) are ***not both high*** (externally), in that state, the UART is bridged to Virtual Serial Port service; the BL652 module does not respond to AT commands and cannot load *smart*BASIC application scripts.

© Copyright 2025 Ezurio
All Rights Reserved

Note 13	The *smartBASIC* runtime engine has DIO (Default Function) INPUT pins, which are set PULL-UP by default. This avoids floating inputs (which can cause current consumption to drive with time in low power modes (such as Standby Doze). You can disable the PULL-UP through your *smart*BASIC application. All of the SIO pins (with a default function of DIO) are inputs (apart from SIO_05 and SIO_06, which are outputs): • SIO_06 (alternative function UART_TX) is an output, set High (in the firmware). • SIO_05 (alternative function UART_RTS) is an output, set Low (in the firmware). • SIO_08 (alternative function UART_RX) is an input, set with internal pull-up (in the firmware). • SIO_07 (alternative function UART_CTS) is an input, set with internal pull-down (in the firmware). • SIO_02 is an input set with internal pull-down (in the firmware). It is used for OTA downloading of *smart*BASIC applications. Refer to the latest firmware release documentation for details.
Note 14	Not required for BL652 module normal operation. If you fit an external serial (SPI) flash for data logging purposes, then that external serial (SPI) flash must connect to BL652 module pins SIO_12 (SFLASH_CS), SIO_14 (SFLASH_MISO), SIO_16 (SFLASH_CLK), and SIO_20 (SFLASH_MOSI); in that case, a high level API in *smart*BASIC can be used for fast access using open/close/read/write API functions. By default, these are GPIO pins. Only when in their FlashOpen() *smart*BASIC app are these lines dedicated to SPI and for talking to the off-board flash. If you decide to use an external serial (SPI) flash with BL652-SX-xx, then **ONLY** the manufacturer part numbers below **MUST** be used: • 4 Mbit Macronix MX25R4035F http://www.macronix.com/Lists/DataSheet/Attachments/3288/MX25R4035F,%20Wide%20Range,%204Mb,%20v1.2.pdf • 8 Mbit Macronix MX25R8035F http://www.macronix.com/Lists/DataSheet/Attachments/3532/MX25R8035F,%20Wide%20Range,%208Mb,%20v1.2.pdf *smart*BASIC does not provide access to any external serial (SPI) flash other than these part numbers.
Note 15	Not required for BL652 module normal operation. The on-chip 32.768kHz RC oscillator provides the standard accuracy of ±250 ppm, with calibration required every 8seconds (default) to stay within ±250 ppm. BL652 also allows as an option to connect an external higher accuracy (±20 ppm) 32.768 kHz crystal to the BL652-SX-xx pins SIO_01/XL2 (pin 24) and SIO_00/XL1 (pin 25). This provides higher accuracy protocol timing and helps with radio power consumption in the system standby doze/deep sleep modes by reducing the time that the Rx window must be open.

The BL652 module is delivered with the integrated *smart*BASIC runtime engine firmware loaded (but no onboard *smart*BASIC application script). Therefore it boots into AT command mode by default.

At reset, all SIO lines are configured as the defaults shown above.

SIO lines can be configured through the *smart*BASIC application script to be either inputs or outputs with pull-ups or pull-downs. When an alternative SIO function is selected (such as I2C or SPI), the firmware does not allow the setup of internal pull-up/pull-down. Therefore, when I2C interface is selected, pull-up resistors on I2C SDA and I2C SCL ***must*** be connected externally as per I2C standard.

UART_RX, UART_TX, and UART_CTS are 3.3 V level logic (if VCC is 3.3 V; such as SIO pin I/O levels track VCC). For example, when Rx and Tx are idle, they sit at 3.3 V (if VCC is 3.3 V). Conversely, handshaking pins CTS and RTS at 0V are treated as assertions.

Pin 28 (nAutoRUN) is an input, with active low logic. In the development kit (DVK-BL652-xx) it is connected so that the state is driven by the host's DTR output line. The nAutoRUN pin must be externally held high or low to select between the following two BL652 operating modes:

- Self-contained Run mode (nAutoRUN pin held at 0V –this is the default (internal pull-down enabled))
- Interactive/Development mode (nAutoRUN pin held at VCC)

© Copyright 2025 Ezurio
All Rights Reserved

The *smart*BASIC runtime engine firmware checks for the status of nAutoRUN during power-up or reset. If it is low and if there is a *smart*BASIC application script named **$autorun$**, then the *smart*BASIC runtime engine firmware executes the application script automatically; hence the name S*elf-contained Run Mode*.

3.3 Electrical Specifications

3.3.1 Absolute Maximum Ratings

Absolute maximum ratings for supply voltage and voltages on digital and analogue pins of the module are listed below; exceeding these values causes permanent damage.

Table 3: Maximum current ratings

Parameter	Min	Max	Unit
Voltage at VDD_nRF pin	-0.3	+3.9 (Note 1)	V
Voltage at GND pin		0	V
Voltage at SIO pin (at VDD_nRF≤3.6V)	-0.3	VDD_nRF +0.3	V
Voltage at SIO pin (at VDD_nRF≥3.6V)	-0.3	3.9	V
NFC antenna pin current (NFC1/2)	-	80	mA
Radio RF input level	-	10	dBm
Environmental			
Storage temperature	-40	+85	°C
MSL (Moisture Sensitivity Level)	-	4	-
ESD (as per EN301-489)			
Conductive		4	KV
Air Coupling		8	KV
Flash Memory (Endurance) (Note 2)	-	10000	Write/erase cycles
Flash Memory (Retention)	-	10 years at 40°C	-

Maximum Ratings Notes:

Note 1	The absolute maximum rating for VCC pin (max) is 3.9V for the BL652-Sx-xx.
Note 2	Wear levelling is used in file system.

3.3.2 Recommended Operating Parameters

Table 4: Power supply operating parameters

Parameter	Min	Typ	Max	Unit
VDD_nRF (independent of DCDC)[1]	1.8	3.3	3.6	V
VCC Maximum ripple or noise[2]	-	-	10	mV
VCC rise time (0 to 1.7V)[3]	-	-	60	mS
Operating Temperature Range	-40	-	+85	°C

Recommended Operating Parameters Notes:

Note 1	4.7 uF internal to module on VCC. In *smart*BASIC runtime engine firmware, use of the internal DCDC convertor or LDO is decided by the underlying BLE stack.
Note 2	This is the maximum VCC ripple or noise (at any frequency) that does not disturb the radio.
Note 3	The on-board power-on reset circuitry may not function properly for rise times outside the noted interval.

© Copyright 2025 Ezurio
All Rights Reserved

Table 5: Signal levels for interface, SIO

Parameter	Min	Typ	Max	Unit
V_{IH} Input high voltage	0.7 VDD_nRF		VDD_nRF	V
V_{IL} Input low voltage	VSS		0.3 x VDD_nRF	V
V_{OH} Output high voltage				
(std. drive, 0.5 mA) (Note 1)	VDD_nRF -0.4		VDD_nRF	V
(high drive, 3 mA) (Note 1)	VDD_nRF -0.4		VDD_nRF	V
(high drive, 5 mA) (Note 2)	VDD_nRF -0.4		VDD_nRF	
V_{OL} Output low voltage				
(std. drive, 0.5 mA) (Note 1)	VSS		VSS+0.4	V
(high drive, 3 mA) (Note 1)	VSS		VSS+0.4	V
(high drive, 5 mA) (Note 2)	VSS		VSS+0.4	
V_{OL} Current at VSS+0.4V,Output set low				
(std. drive, 0.5 mA) (Note 1)	1	2	4	mA
(high drive, 3 mA) (Note 1)	3	-	-	mA
(high drive, 5 mA) (Note 2)	6	10	15	mA
V_{OL} Current at VDD_nRF -0.4, Output set high				
(std. drive, 0.5 mA) (Note 1)	1	2	4	mA
(high drive, 3 mA) (Note 1)	3	-	-	mA
(high drive, 5 mA) (Note 2)	6	9	14	mA
Pull up resistance	11	13	16	kΩ
Pull down resistance	11	13	16	kΩ
Pad capacitance		3		pF
Pad capacitance at NFC pads		4		pF

Signal Levels Notes:

Note 1	For VDD_nRF≥1.7V. The *smart*BASIC firmware supports high drive (3 mA, as well as standard drive).
Note 2	For VDD_nRF≥2.7V. The *smart*BASIC firmware supports high drive (5 mA (since VDD_nRF≥2.7V), as well as standard drive).

© Copyright 2025 Ezurio
All Rights Reserved

Table 6: SIO pin alternative function AIN (ADC) specification

Parameter	Min	Typ	Max	Unit
ADC Internal reference voltage	-1.5%	0.6 V	+1.5%	%
ADC pin input internal selectable scaling		4, 2, 1, 1/2, 1/3, 1/4, 1/5 1/6		scaling
ADC input pin (AIN) voltage maximum without damaging ADC w.r.t[1] VCC Prescaling 0V-VDD_nRF 4, 2, 1, ½, 1/3, ¼, 1/5, 1/6		VDD+0.3		V
Configurable via smartBASIC Resolution	8bit mode	10bit mode	12bit mode	bits
Configurable via smartBASIC[2]				
Acquisition Time, source resistance ≤10kΩ Acquisition Time,		3		uS
source resistance ≤40kΩ		5		uS
Acquisition Time, source resistance ≤100kΩ		10		uS
Acquisition Time, source resistance ≤200kΩ		15		uS
Acquisition Time, source resistance ≤400kΩ		20		uS
Acquisition Time, source resistance ≤800kΩ		40		uS
Conversion Time[3]		<2		uS
ADC input impedance (during operation)[3]				
Input Resistance		>1		MOhm
Sample and hold capacitance at maximum gain		2.5		pF

3.3.3 nAutoRUN Pin and Operating Modes

Operating modes (refer to the *smart*BASIC guide for details):

- Self-contained mode
- Interactive/Development mode

Table 7: nAutoRUN pin

Signal Name	Pin #	I/O	Comments
nAutoRUN / (SIO_13)	28	I	Input with active low logic. Internal pull down (default). Operating mode selected by nAutoRun pin status: • If Low (0V), runs $autorun$ if it exists • If High (VCC), runs via at+run (and file name of application)

Pin 28 (nAutoRUN) is an input, with active low logic. In the development board (DVK-BL652-xx) it is connected so that the state is driven by the host's DTR output line. nAutoRUN pin needs to be externally held high or low to select between the two BL652 operating modes:

- Self-contained Run mode (nAutoRUN pin held at 0V).
- Interactive/Development mode (nAutoRUN pin held at VCC).

*smart*BASIC runtime engine firmware checks for the status of nAutoRUN during power-up or reset. If it is low AND if there is a *smart*BASIC application named $autorun$, the *smart*BASIC runtime engine executes the application automatically; hence the name *self-contained run mode*.

© Copyright 2025 Ezurio
All Rights Reserved

3.3.4 OTA (Over-the-Air) *smart*BASIC Application Download

Refer to latest firmware release documentation (firmware release notes and *smart*BASIC user guide) for details.

Table 8: OTA mode

Recommended Operating Parameters Notes:	
Note 1	Stay within internal 0.6 V reference voltage with given pre-scaling on AIN pin and do not violate ADC maximum input voltage (for damage) for a given VCC, e.g. If VCC is 3.6V, you can only expose AIN pin to VDD+0.3 V. Default pre-scaling is 1/6 which configurable via smartBASIC.
Note 2	smartBASIC runtime engine firmware allows configurable resolution (8-bit, 10-bit or 12-bit mode) and acquisition time. The sampling frequency is limited by the sum of sampling time and acquisition time. The maximum sampling time is 2us. For acquisition time of 3us the total conversion time is therefore 5us, which makes maximum sampling frequency of 1/5us = 200kHz. Similarly, if acquisition time of 40us chosen, then the conversion time is 42us and the maximum sampling frequency is 1/42us = 23.8kHz
Note 3	ADC input impedance is estimated mean impedance of the ADC (AIN) pins.

Signal Name	Pin #	I/O	Comments
SIO_02	23	I	Internal pull down (default). OTA mode selected by externally pulling-up SIO_02 pin: **High (VCC),** then OTA *smart*BASIC application download is possible.

The OTA *smart*BASIC application download feature can be useful for production because it allows the module to be soldered into an end product without pre-configuration; the application can then be downloaded over-the-air once the product has been pre-tested.

Note: It is the *smart*BASIC application that is downloaded over-the-air and NOT the firmware. Since this is principally designed for use in production with multiple programming stations in a locality, the transmit power is limited (to lower Tx power). See the ***smart*BASIC user guide** for more details.

© Copyright 2025 Ezurio
All Rights Reserved

4 Power Consumption

Data taken at VCC_nRF of 3.0 V with internal (to chipset) LDO ON or with internal (to chipset) DCDC ON (see Note 1) and 25°C.

4.1 Power Consumption

Table 9: Power consumption

Parameter	Min	Typ	Max	Unit
Active mode 'peak' current (Note 1)		With DCDC [with LDO]		
(Advertising or Connection)				
Tx only run peak current @ Txpwr = +4 dBm		7.5 [16.6]		mA
Tx only run peak current @ Txpwr = 0 dBm		5.3 [11.6]		mA
Tx only run peak current @ Txpwr = -4 dBm		4.2 [9.3]		mA
Tx only run peak current @ Txpwr = -8 dBm		3.8 [8.4]		mA
Tx only run peak current @ Txpwr = -12 dBm		3.5 [7.7]		mA
Tx only run peak current @ Txpwr = -16 dBm		3.3 [7.3]		mA
Tx only run peak current @ Txpwr = -20 dBm		3.2 [7.0]		mA
Tx Whisper mode 1 (Note 2)				
Tx only run peak current @ Txpwr = -40 dBm		2.7 [5.9]		mA
Active Mode				
Rx only 'peak' current (Note 2)		5.4 [11.7]		mA
Ultra Low Power Mode 1 (Note 2)				
Standby Doze, 64k RAM retention		2.0		uA
Ultra Low Power Mode 2 (Note 3)				
Deep Sleep (no RAM retention)		400		nA
Active Mode Average current (Note 4)				
Advertising Average Current draw				
Max, with advertising interval (min) 20 mS		~511		uA
Min, with advertising interval (max) 10240 mS		~3.2		uA
Connection Average Current draw				
Max, with connection interval (min) 7.5 mS		~513		uA
Min, with connection interval (max) 4000 mS		~2.9		uA

Power Consumption Notes:

Note 1	This is for Peak Radio Current only, but there is additional current due to the MCU, refer to Table 12 and Table 15 for the peak and "Average Advert/connection (burst) current" consumption profile (with DCDC on) during advertising and connection versus TX power. In *smart*BASIC runtime engine firmware, use of the internal DCDC convertor or LDO is decided by the underlying BLE stack.
Note 2	BL652-Sx-xx: Standby Doze is 2.0 uA typical. Standby Doze is entered automatically (when a waitevent statement is encountered within a smartBASIC application script). In Standby Doze, all peripherals that are enabled stay on and may re-awaken the chip. Depending on active peripherals, current consumption ranges from ~2.0 µA to 270 uA (when UART is ON). See individual peripherals current consumption data in the Peripheral Block Current Consumption section. smartBASIC runtime engine firmware has added new functionality to detect GPIO change with no current consumption cost, it is possible to close the UART and get to the 2.0uA current consumption regime and still be able to detect for incoming data and be woken up so that the UART can be re-opened at expense of losing that first character.

© Copyright 2025 Ezurio
All Rights Reserved

	The BL652 Standby Doze current consists of the below nRF52 blocks: • nRF52 System ON IDLE current (no RAM retention) (1.2 uA) – This is the base current of the CPU • LFRC (0.35 uA) and RTC (0.1uA) running as well as 64k RAM retention (0.32 uA) – This adds to the total of 2 uA typical.
Note 3	In Deep Sleep, everything is disabled and the only wake-up sources (including NFC to wakeup) are reset and changes on SIO or NFC pins on which sense is enabled. The current consumption seen is ~400 nA typical in BL652-Sx-xx. • *smart*BASIC runtime engine firmware requires a hardware reset to come out of deep sleep. • *smart*BASIC runtime engine firmware also allows coming out from Deep Sleep to Standby Doze through GPIO signal through the reset vector. Deep Sleep mode is entered with a command in *smart*BASIC application script.
Note 4	Data taken with a transmit power of 4 dBm and all peripherals off (UART OFF after radio event), slave latency of 0 (in a connection). Average current consumption depends on a number of factors (including Tx power, VCC, accuracy of 32MHz and 32.768 kHz). With these factors fixed, the largest variable is the advertising or connection interval set. Advertising Interval range: • 20 milliseconds to 10240 milliseconds in multiples of 0.625 milliseconds for the following Advert type: ADV_IND and ADV_DIRECT_IND • 100 milliseconds to 10240 milliseconds in multiples of 0.625 milliseconds for the following Advert types: ADV_SCAN_IND and ADV_NONCONN_IND For advertising timeout, if the advert type is ADV_DIRECT_IND, then the timeout is limited to 1.28 seconds (1280 milliseconds). For an advertising event: • The minimum average current consumption is when the advertising interval is large 10240 mS (although this may cause long discover times (for the advertising event) by scanners • The maximum average current consumption is when the advertising interval is small 20 mS Other factors that are also related to average current consumption include the advertising payload bytes in each advertising packet and whether it's continuously advertising or periodically advertising. Connection Interval range: • 7.5 milliseconds to 4000 milliseconds in multiples of 1.25 milliseconds. For a connection event: • The minimum average current consumption is when the connection interval is large 4000 milliseconds • The maximum average current consumption is with the shortest connection interval of 7.5 ms; no slave latency. Other factors that are also related to average current consumption include: • Whether transmitting six packets per connection interval with each packet containing 20 bytes (which is the maximum for each packet) • An inaccurate 32.768 kHz master clock accuracy would increase the average current consumption.

© Copyright 2025 Ezurio
All Rights Reserved

4.2 Measured Current Waveforms during Advertising and Connection

The following figures illustrate current waveforms observed as the BL652 module performs advertising and connection functionality.

TX power – 4 dBm	29 byte payload
Advert duration ~4.377 ms	Advertising interval – 20 ms

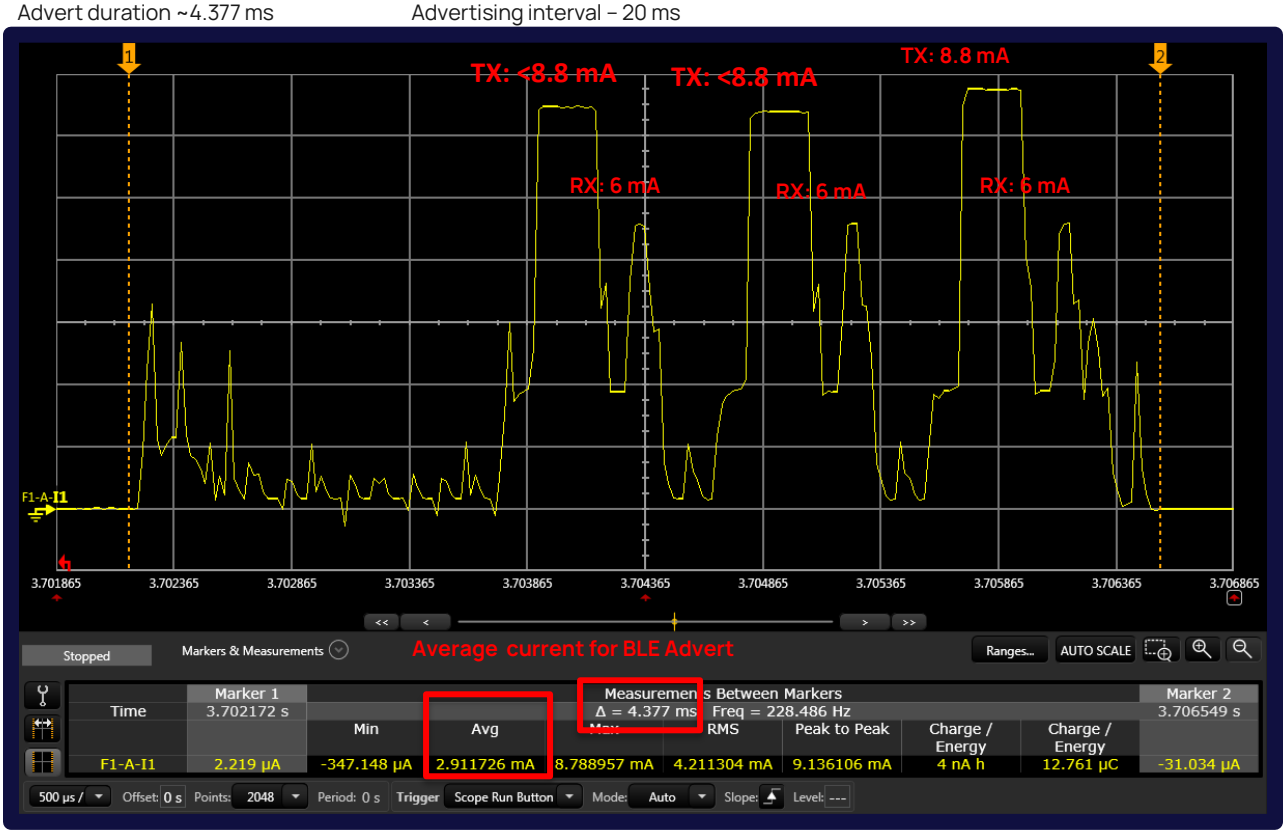

Figure 4: Typical peak current consumption profile (with DCDC ON) during advertising in slave mode @ TX PWR +4 dBm. UART is OFF

© Copyright 2025 Ezurio
All Rights Reserved

TX power – 4 dBm
Interval – 7.5 ms

29 byte payload
Advertising interval – 20 ms

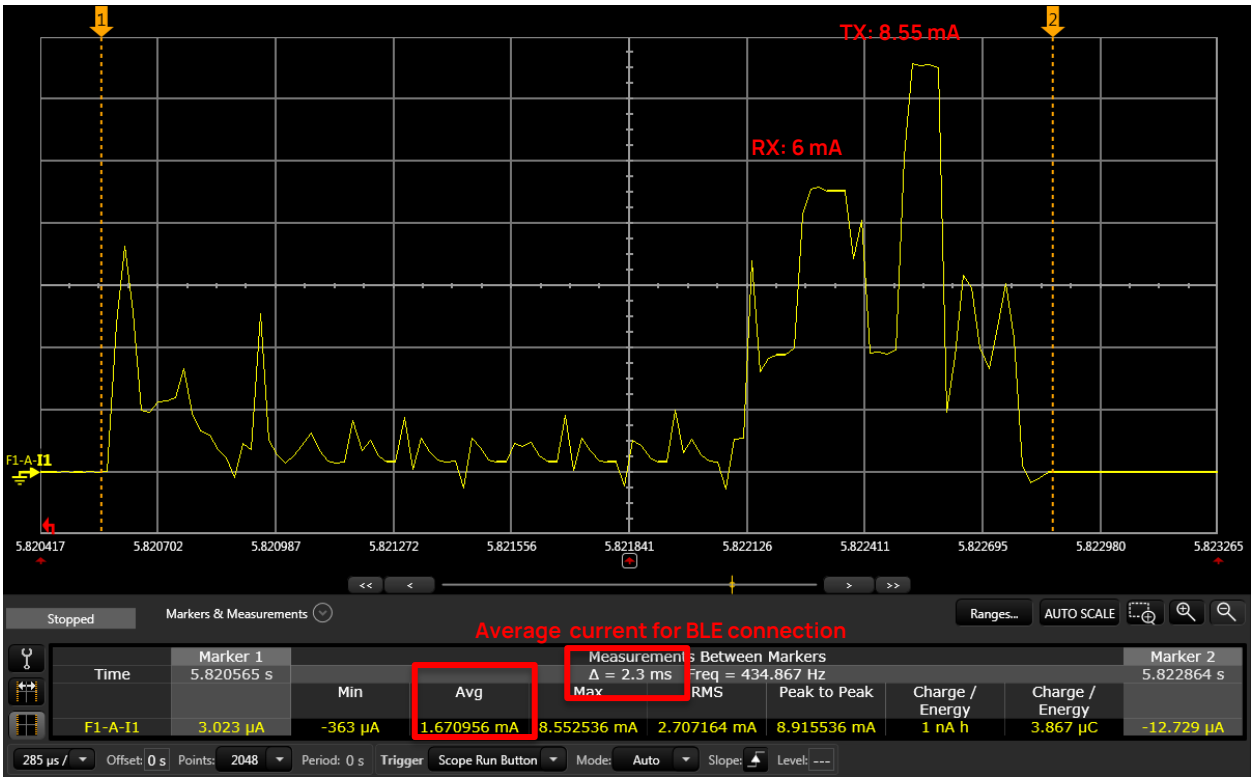

Figure 5: Typical peak current consumption profile (with DCDC ON) during data connection event in slave mode @ TX PWR +4dBm, UART OFF

Note: In the above pictures, UART is OFF. Y-axis current (1.3 mA per square).

To make things easier the average current during the whole BLE event is shown in the plot above, and then the BLE event total charge consumption is found by multiplying the average current over the BLE event with the length of the event. This charge can then be used to extrapolate the average current for **different advertising intervals**, by dividing by the interval. Then the StandbyDoze (IDLE) current must be added to give the total average current. In this example we can calculate the average current to be:

The total charge of the BLE event:

```
BLE_charge = BLE_avg * BLE_length
```

The average current consumed by the BLE event for a specific interval:

```
BLE_avg = BLE_charge / (BLE_interval + perturbation)
```

The perturbation is given as a random number between 0 and 10 milliseconds added to the interval to prevent advertisers to periodically transmit at the exact same time. This averages to 5 milliseconds.

Adding the IDLE current (StandbyDoze mode) to the inactive part of the interval:

```
TOT_avg = BLE_avg + IDLE * (BLE_interval - BLE_length) / BLE_interval
```


© Copyright 2025 Ezurio
All Rights Reserved

Performing the calculation with the numbers 25mS advertising internal and TX power for 4dBm for example:

BLE_charge = 4.377 ms * 2.91 mA = 12.74 uC

BLE_avg = 12.74 uC / (20 ms + 5 ms) = 509.78 uA

TOT_avg = 509.78 uA + 2 uA * (25 ms - 4.377 ms)/25 ms = 511.43 uA

Table 10 and Table 11 display the measured "Average Advert (Burst) current" (for a given TX power) which can be used to calculate the Total average current for any advertising interval.

Table 12 and Table 13 display the measured "Average Connection (Burst) current" (for a given TX power) which can be used to calculate the Total average current for any connection interval.

The following table (Table 10) shows the measured total average current consumption profile (with DCDC on) during advertising in slave mode versus TX power for a minimum advertising interval of 25 milliseconds. Note that UART is off.

Table 10: Measured total average current consumption profile – for a minimum advertising interval of 25 ms

TX Power (dBm)	Average Advert (Burst) Current (uA)	Average Advert (Burst) Duration (mS)	BLE Advert Charge (uC)	BLE Advert Interval 20 mS plus 5 mS Perturbation	BLE Advert Average (uA)	Max Standby Doze Current (uA)	BLE Advert Interval 20 mS plus 5 mS Pertubation	Total Average Current (uA)
4	2911.726	4.377	12744.625	25	509.785	2	25	511.435
0	2431.095	4.377	10640.903	25	425.636	2	25	427.286
-4	2163.884	4.377	9471.320	25	378.853	2	25	380.503
-8	2151.602	4.377	9417.562	25	376.702	2	25	378.352
-12	2086.596	4.377	9133.031	25	365.321	2	25	366.971
-16	2052.041	4.377	8981.783	25	359.271	2	25	360.921
-20	2029.615	4.377	8883.625	25	355.345	2	25	356.995
-40	1960.112	4.377	8579.410	25	343.177	2	25	344.826

The following table (Table 11) shows the measured total average current consumption profile (with DCDC on) during advertising in slave mode versus TX power for a maximum advertising interval of 10240 milliseconds. Note that UART is off.

Table 11: Measured total average current consumption profile – for a minimum advertising interval of 10240 ms

TX Power (dBm)	Average Advert (Burst) Current (uA)	Average Advert (Burst) Duration (mS)	BLE Advert Charge (uC)	BLE Advert Interval 10240 mS plus 5 mS Perturbation	BLE Advert Average (uA)	Max Standby Doze Current (uA)	BLE Advert Interval 10240 mS plus 5 mS Perturbation	Total Average Current (uA)
4	2911.726	4.377	12744.625	10245	1.244	2	10245	3.243
0	2431.095	4.377	10640.903	10245	1.039	2	10245	3.038
-4	2163.884	4.377	9471.320	10245	0.924	2	10245	2.924
-8	2151.602	4.377	9417.562	10245	0.919	2	10245	2.918
-12	2086.596	4.377	9133.031	10245	0.891	2	10245	2.891
-16	2052.041	4.377	8981.783	10245	0.877	2	10245	2.876
-20	2029.615	4.377	8883.625	10245	0.867	2	10245	2.866
-40	1960.112	4.377	8579.410	10245	0.837	2	10245	2.837

© Copyright 2025 Ezurio
All Rights Reserved

Table 12 displays measured peak and "Average Advert (burst) current" consumption profile (with DCDC on) during advertising in slave mode versus TX power. Between Marker 1 and 2 is the average BLE advert current.

Table 12: Measured average advert (burst) current consumption profiles (with DCDC on) during advertising in slave mode vs TX power

TX power: 4 dBm Advert	29 byte payload 20 ms interval	Average BLE advert current burst (excluding advertising interval): 2.911 mA Aside: Peak TX current: 8.8 mA Peak RX current: 6 mA

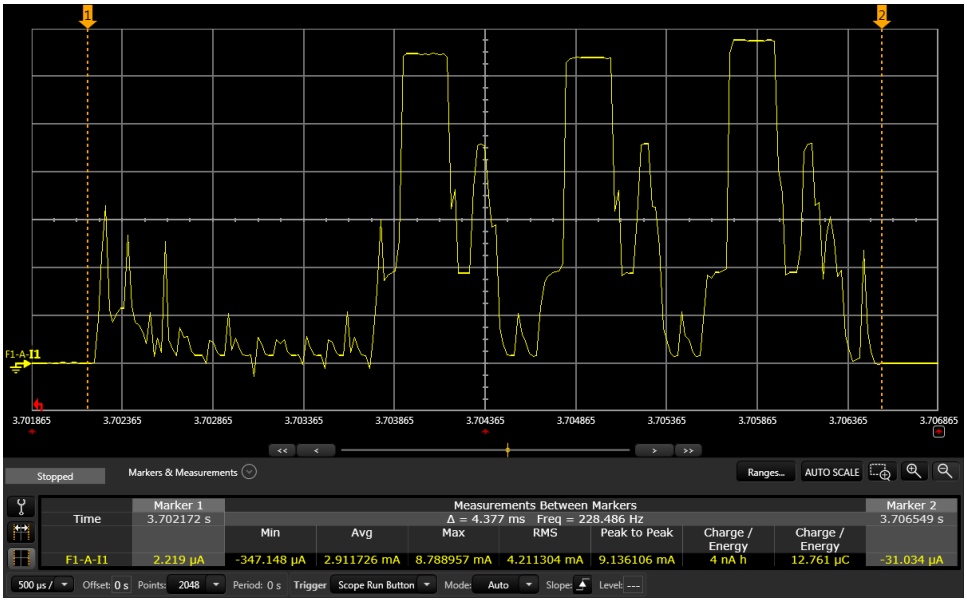

TX power: 0 dBm Advert	29 byte payload 20 ms interval	Average BLE advert current burst (excluding advertising interval): 2.431 mA Aside: Peak TX current: 6 mA Peak RX current: 6 mA

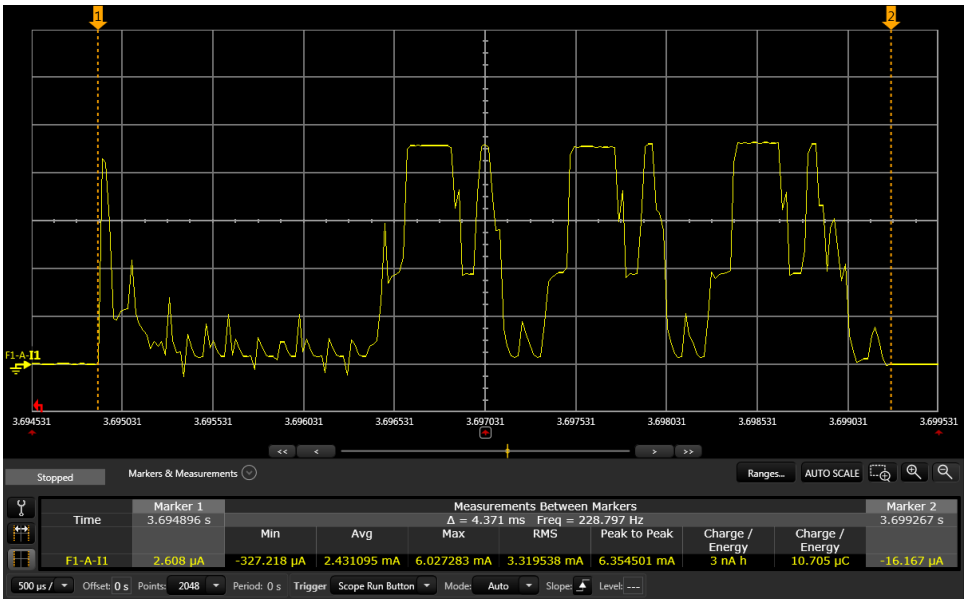

© Copyright 2025 Ezurio
All Rights Reserved

TX power: -4 dBm
Advert

29 byte payload
20 ms interval

Average BLE advert current burst (excluding advertising Interval): 2.163 mA

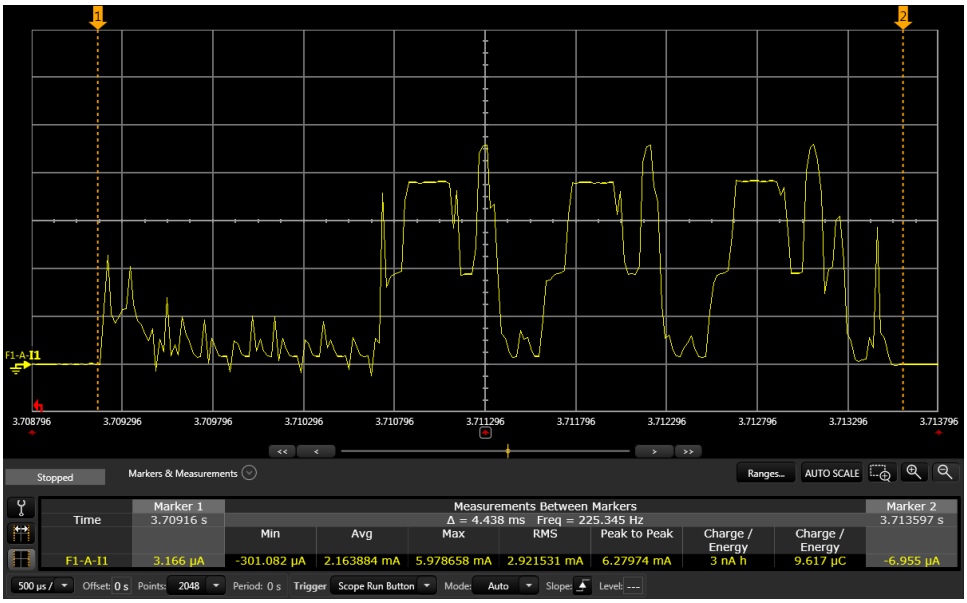

Aside:
Peak TX current: 4.98 mA
Peak RX current: 5.99 mA

© Copyright 2025 Ezurio
All Rights Reserved

TX power: -8 dBm
Advert

29 byte payload
20 ms interval

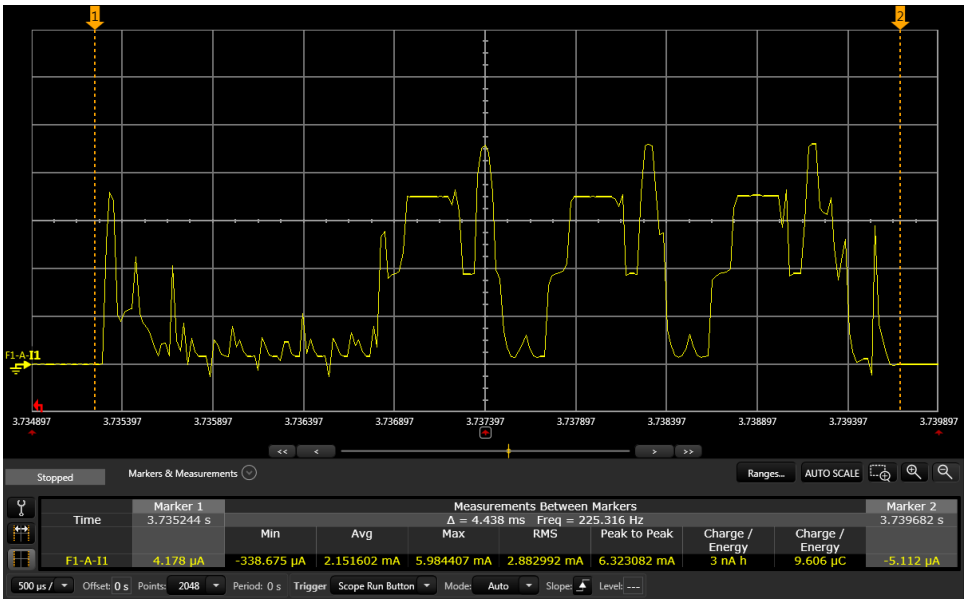

Average BLE advert current burst (excluding advertising Interval): 2.151 mA

Aside:
Peak TX current: 4.59 mA
Peak RX current: 5.98 mA

TX power: -12 dBm
Advert

29 byte payload
20 ms interval

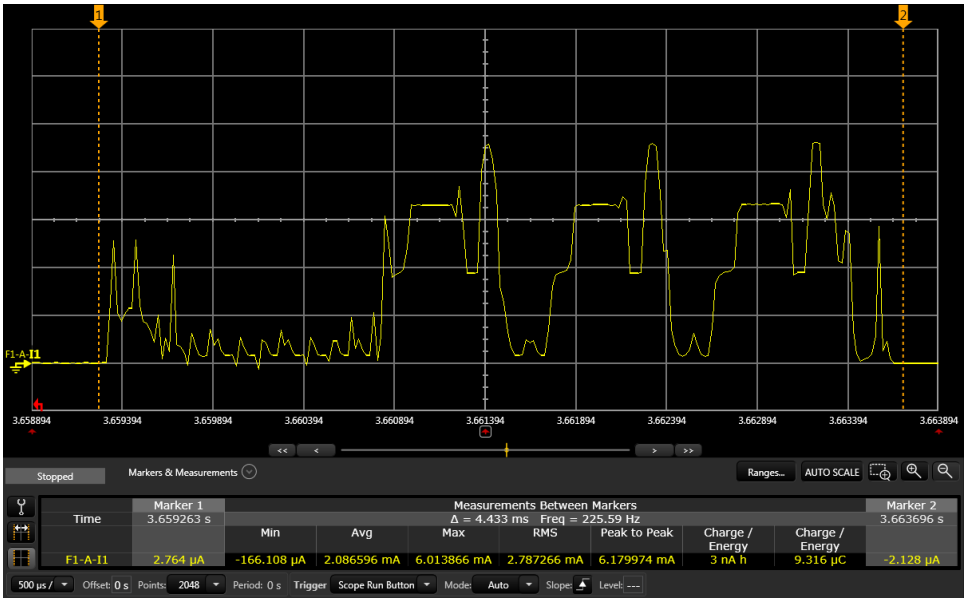

Average BLE advert current burst (excluding advertising Interval): 2.086 mA

Aside:
Peak TX current: 4.34 mA
Peak RX current: 5.99 mA

© Copyright 2025 Ezurio
All Rights Reserved

TX power: -16 dBm
Advert

29 byte payload
20 ms interval

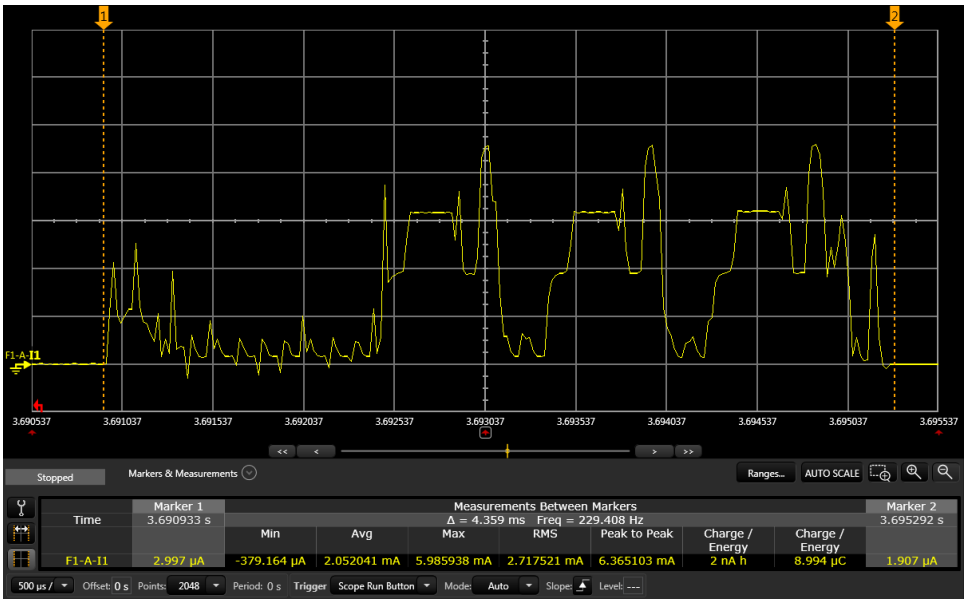

Average BLE advert current burst (excluding advertising Interval): 2.052 mA

Aside:
Peak TX current: 4.16 mA
Peak RX current: 5.99 mA

TX power: -20 dBm
Advert

29 byte payload
20 ms interval

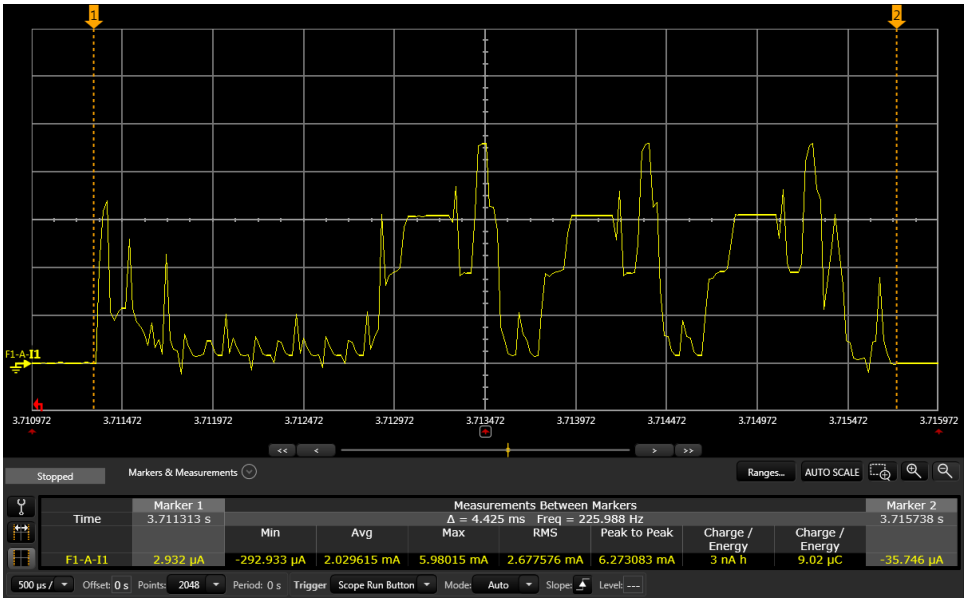

Average BLE advert current burst (excluding advertising Interval): 2.029 mA

Aside:
Peak TX current: 4.03 mA
Peak RX current: 5.99 mA

© Copyright 2025 Ezurio
All Rights Reserved

TX power: -40 dBm
Advert

29 byte payload
20 ms interval

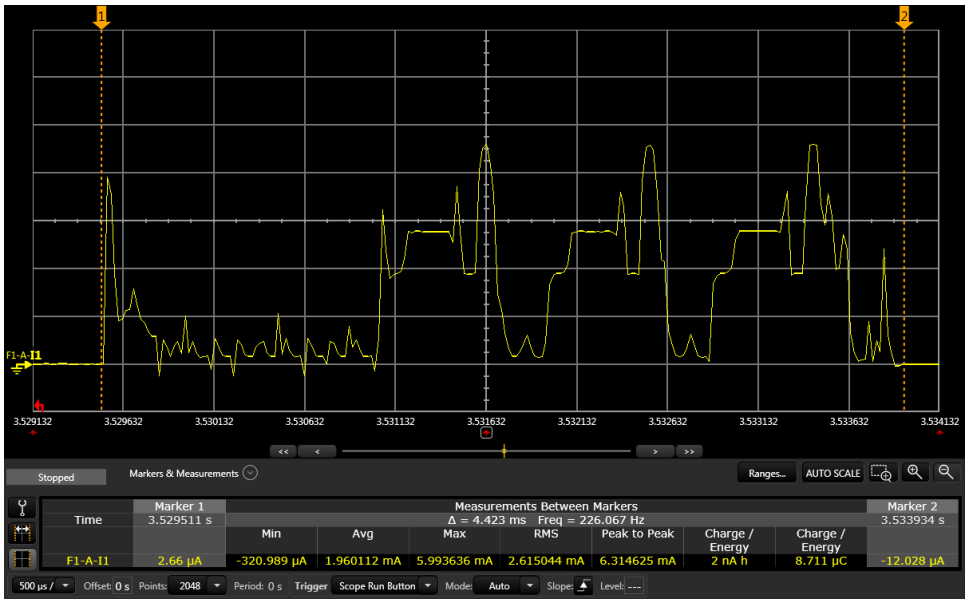

Average BLE advert current burst (excluding advertising Interval): 1.960 mA

Refer to table for worked out total BLE advert average current for given advertising interval.

Aside:
Peak TX current: 3.6 mA
Peak RX current: 6.01 mA

Table 13 and Table 14 has the measured "Average Connection (Burst) current" (for a given TX power) which can be used to calculate the Total average current for any connection interval.

Table 13: Measured Total average current consumption profile (with DCDC ON) during connection in slave mode versus TX POWER for minimum Connection interval of 7.5 mS. UART is OFF

TX power (dBm)	Average Connection (Burst) Current (uA)	Average Connection (Burst) Duration (mS)	BLE Connection Charge (uC)	BLE Connection Interval (mS)	BLE Connection Average (uA)	Max Standby Doze Current (uA)	BLE Connection Interval 7.5 ms	Total Average Current (uA)
4	1670.956	2.3	3843.199	7.5	512.427	2	7.5	513.813
0	1560.069	2.3	3588.159	7.5	478.421	2	7.5	479.808
-4	1513.156	2.3	3480.259	7.5	464.035	2	7.5	465.421
-8	1492.133	2.3	3431.906	7.5	457.587	2	7.5	458.974
-12	1488.407	2.3	3423.336	7.5	456.445	2	7.5	457.831
-16	1469.042	2.3	3378.797	7.5	450.506	2	7.5	451.893
-20	1454.618	2.3	3345.621	7.5	446.083	2	7.5	447.470
-40	1428.215	2.3	3284.895	7.5	437.986	2	7.5	439.373

Table 14: Measured Total average current consumption profile (with DCDC ON) during connection in slave mode versus TX POWER for minimum Connection interval of 4000mS. UART is OFF

TX power (dBm)	Average Connection (Burst) Current (uA)	Average Connection (Burst) Duration (mS)	BLE Connection Charge (uC)	BLE Connection Interval (mS)	BLE Connection Average (uA)	Max Standby Doze Current (uA)	BLE Connection Interval 7.5 ms	Total Average Current (uA)
4	1670.956	2.3	3843.199	4000	0.961	2	4000	2.960
0	1560.069	2.3	3588.159	4000	0.897	2	4000	2.896
-4	1513.156	2.3	3480.259	4000	0.870	2	4000	2.869

© Copyright 2025 Ezurio
All Rights Reserved

TX power (dBm)	Average Connection (Burst) Current (uA)	Average Connection (Burst) Duration (mS)	BLE Connection Charge (uC)	BLE Connection Interval (mS)	BLE Connection Average (uA)	Max Standby Doze Current (uA)	BLE Connection Interval 7.5 ms	Total Average Current (uA)
-8	1492.133	2.3	3431.906	4000	0.858	2	4000	2.857
-12	1488.407	2.3	3423.336	4000	0.856	2	4000	2.855
-16	1469.042	2.3	3378.797	4000	0.845	2	4000	2.844
-20	1454.618	2.3	3345.621	4000	0.836	2	4000	2.835
-40	1428.215	2.3	3284.895	4000	0.821	2	4000	2.820

Table 15 displays the typical peak and "Average Connection (Burst) current" consumption profile (with DCDC on) during a connection event in slave mode versus TX power. Between Marker 1 and 2 is the average BLE connection current.

Table 15: Average connection current consumption profiles during a connection event in slave mode

TX power: 4 dBm
Connection

29 byte payload
7.5 ms interval

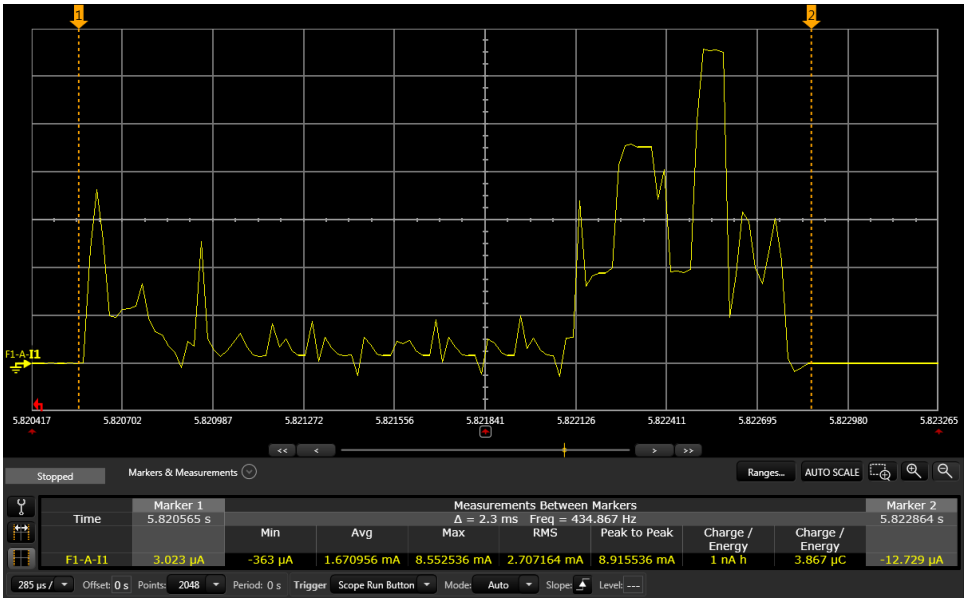

Average BLE connection burst current (excluding connection Interval): 1.67 mA

Aside:
Peak RX current: 5.95mA
Peak TX current: 8.55mA

© Copyright 2025 Ezurio
All Rights Reserved

TX power: 0 dBm
Connection

29 byte payload (2.3 ms)
7.5 ms interval

Average BLE connection burst current (excluding connection Interval): 1.56 mA

Aside:
Peak RX current: 5.92 mA
Peak TX current: 5.96 mA

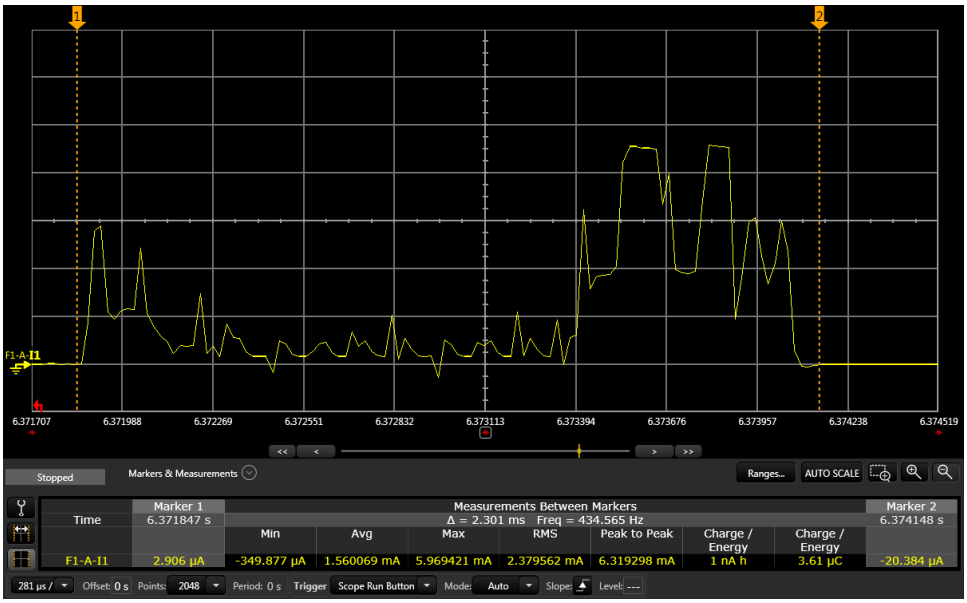

TX power: -4 dBm
Connection

29 byte payload (2.3 ms)
7.5 ms interval

Average BLE connection burst current (excluding connection Interval): 1.513 mA

Aside:
Peak RX current: 5.94 mA
Peak TX current: 4.95 mA

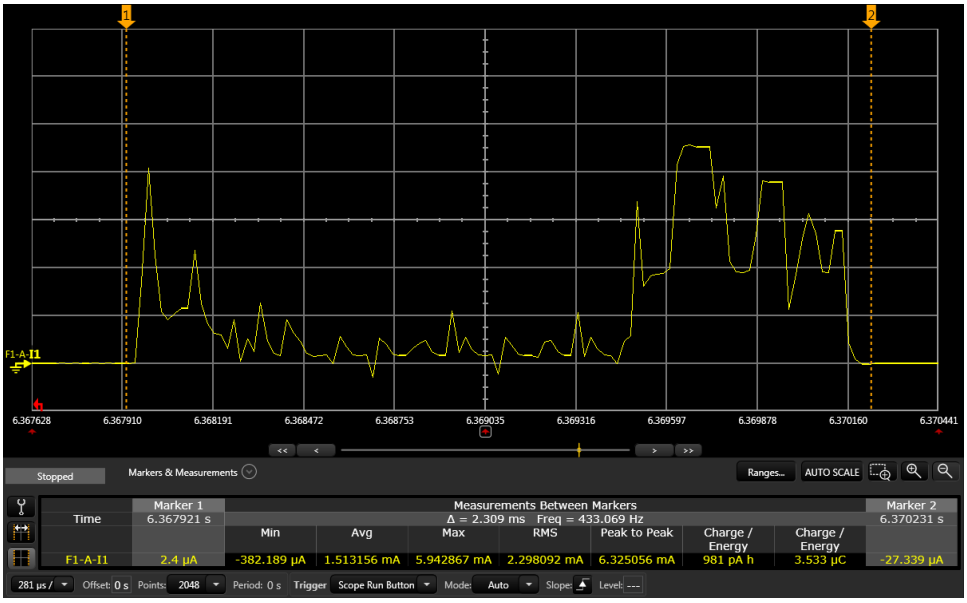

© Copyright 2025 Ezurio
All Rights Reserved

TX power: -8 dBm
Connection

29 byte payload (2.3 ms)
7.5 ms interval

Average BLE connection burst current (excluding connection Interval): 1.492 mA

Aside:
Peak RX current: 5.92 mA
Peak TX current: 4.58 mA

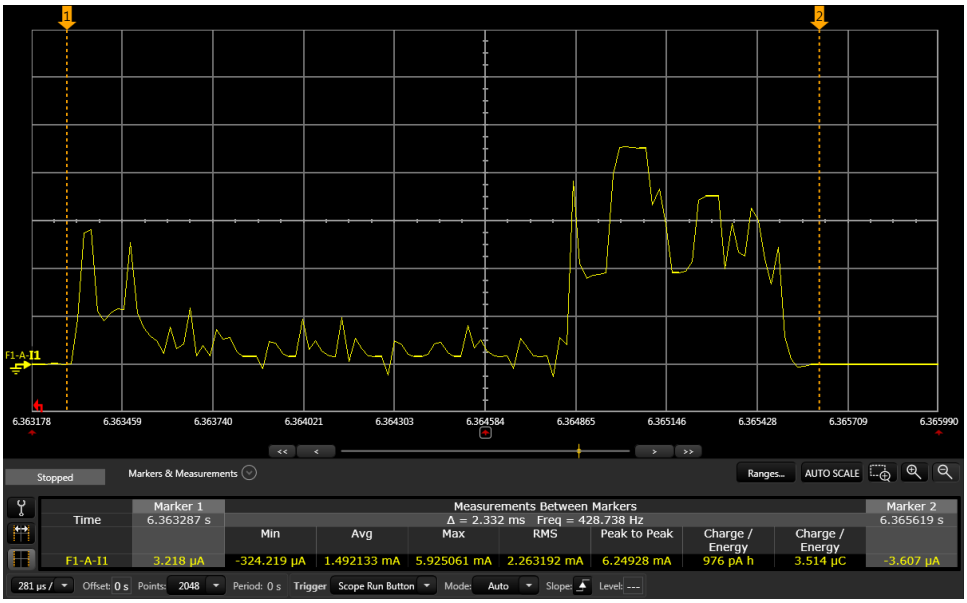

TX power: -12 dBm
Connection

29 byte payload (2.3 ms)
7.5 ms interval

Average BLE connection burst current (excluding connection Interval):
1.488 mA

Aside:
Peak RX current: 5.93 mA
Peak TX current: 4.30 mA

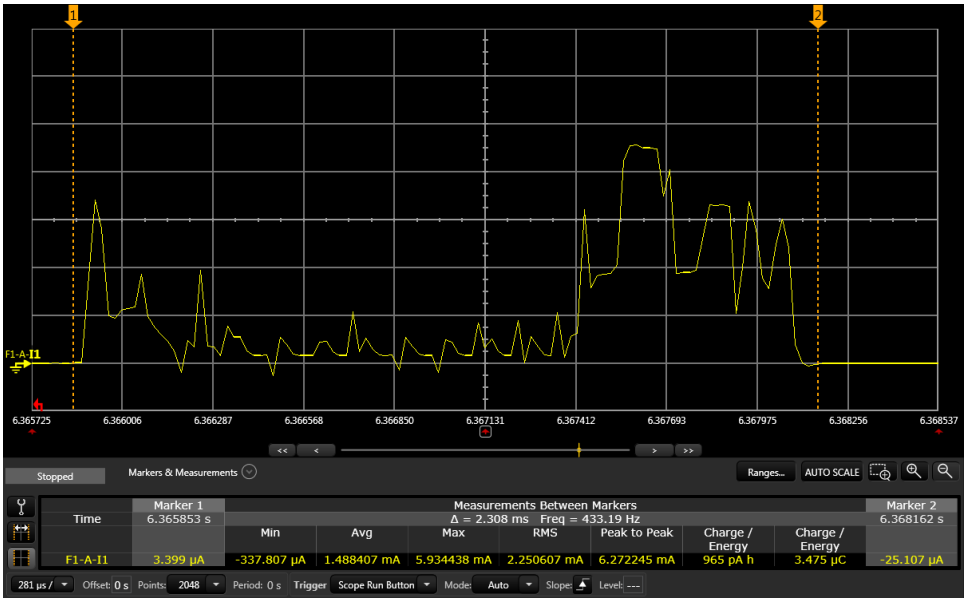

© Copyright 2025 Ezurio
All Rights Reserved

TX power: -16 dBm
Connection

29 byte payload (2.3 ms)
7.5 ms interval

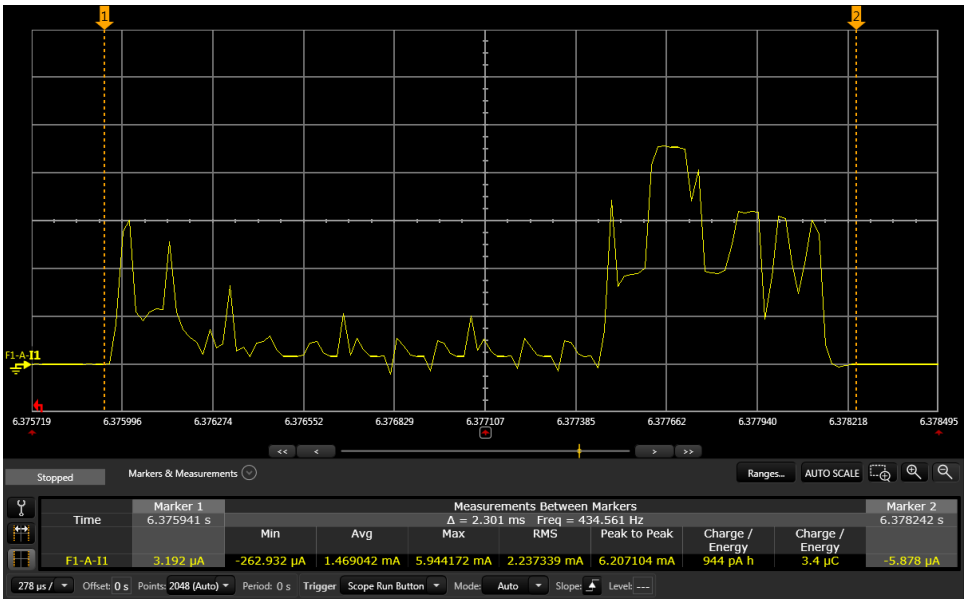

Average BLE connection burst current (excluding connection Interval):
1.469 mA

Aside:
Peak RX current: 5.94 mA
Peak TX current: 4.17 mA

TX power: -20 dBm
Connection

29 byte payload (2.3 ms)
7.5 ms interval

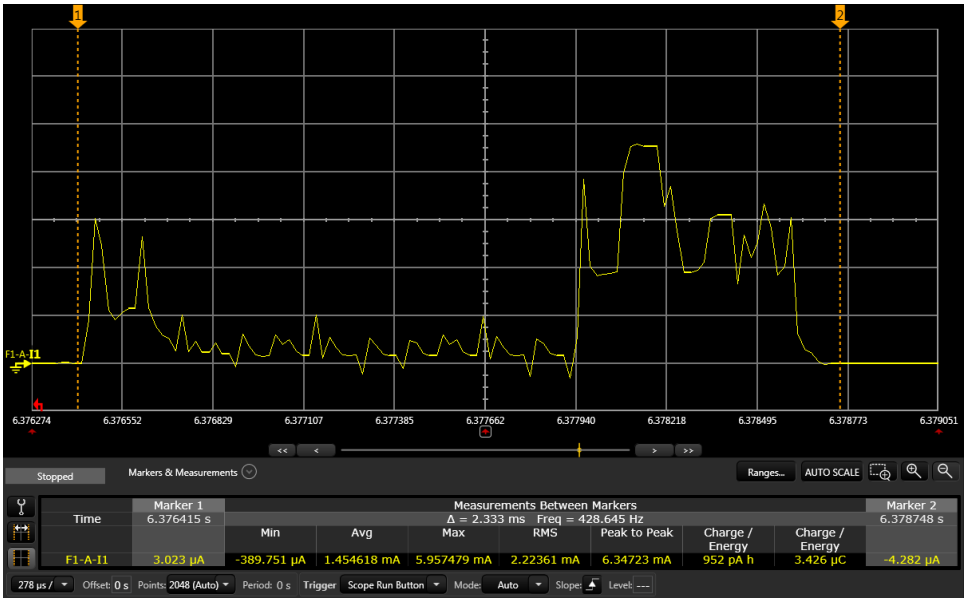

Average BLE connection burst current (excluding connection Interval):
1.454 mA

Aside:
Peak RX current: 5.95 mA
Peak TX current: 4.03 mA

© Copyright 2025 Ezurio
All Rights Reserved

TX power: -40 dBm
Connection

29 byte payload (2.3 ms)
7.5 ms interval

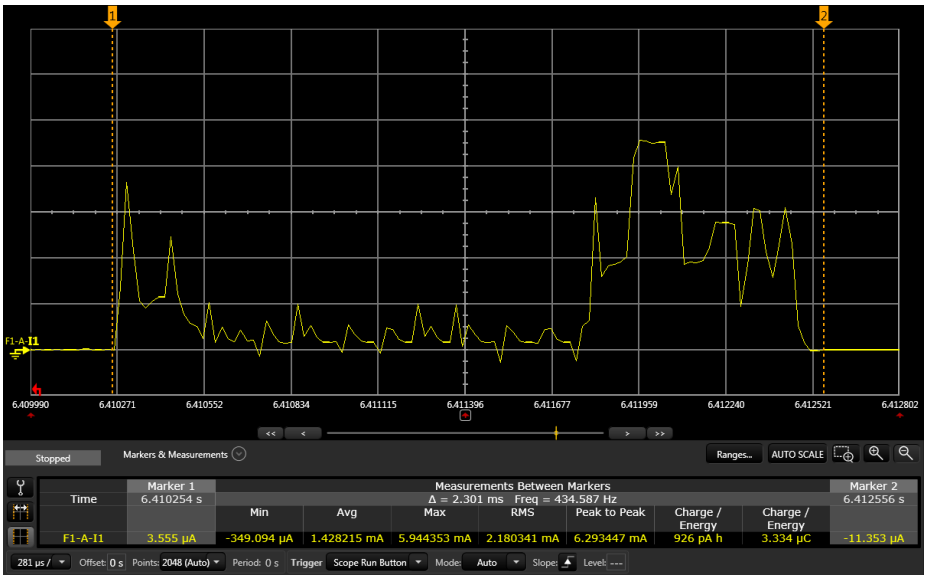

Average BLE connection burst current (excluding connection Interval):
1.428 mA

Aside:
Peak RX current: 5.94 mA
Peak TX current: 3.62 mA

4.3 Peripheral Block Current Consumption

The values below are calculated for a typical operating voltage of 3V.

Table 16: UART power consumption

Parameter	Min	Typ	Max	Unit
UART Run current @ 115200 bps	-	55	-	uA
UART Run current @ 1200 bps	-	55	-	uA
Idle current for UART (no activity)	-	1	-	uA
UART Baud rate	1.2	-	1000	kbps

Table 17: power consumption

Parameter	Min	Typ	Max	Unit
SPI Master Run current @ 2 Mbps	-	50	-	uA
SPI Master Run current @ 8 Mbps	-	50	-	uA
SPI bit rate	0.125	-	8	Mbps

Table 18: I2C power consumption

Parameter	Min	Typ	Max	Unit
I2C Run current @ 100 kbps	-	50	-	uA
I2C Run current @ 400 kbps	-	50	-	uA
I2C Bit rate	100	-	400	kbps

Table 19: ADC power consumption

Parameter	Min	Typ	Max	Unit
ADC current during conversion	-	700	-	uA

The above current consumption is for the given peripheral only and to operate that peripheral requires some other internal blocks which consume base current. This base current is consumed when the UART, SPI, I2C, or ADC is opened (operated).

For asynchronous interface like the UART (asynchronous as the other end can communicate at any time), the UART on the BL652 must be kept open (by a command in *smart*BASIC application script), resulting in the base current consumption penalty.

© Copyright 2025 Ezurio
All Rights Reserved

For a synchronous interface like the I2C or SPI (since BL652 side is the master), the interface can be closed and opened (by a command in *smart*BASIC application script) only when needed, resulting in current saving (no base current consumption penalty). There's a similar argument for ADC (open ADC when needed).

5 Functional Description

The BL652 BLE (Bluetooth Low Energy) module is a self-contained product and requires only power and a user's *smart*BASIC application to implement full BLE functionality. The integrated, high performance antenna combined with the RF and base-band circuitry provides the BLE wireless link, and any of the SIO lines provide the OEM's chosen interface connection to the sensors. The user's *smart*BASIC application binds the sensors to the BLE wireless functionality.

The variety of hardware interfaces and the *smart*BASIC programming language allow the BL652 module to serve a wide range of wireless applications while reducing overall time to market and the learning curve for developing BLE products.

To provide the widest scope for integration, a variety of physical host interfaces/sensors are provided. The major BL652 series module functional blocks described below.

5.1 Power Management (includes Brown-out and Power on Reset)

Power management features:

- System Standby Doze and Deep Sleep modes
- Open/Close Peripherals (UART, SPI, I2C, SIO's, ADC, NFC). Peripherals consume current when open; each peripheral can be individually closed to save power consumption (with a command in a *smart*BASIC application script)
- Use of the internal DCDC convertor or LDO is decided by the underlying BLE stack
- *smart*BASIC command allows the VCC voltage to be read (through the internal ADC)
- Pin wake-up system from deep sleep (including from NFC pins)

Power supply features:

- Supervisor hardware to manage power during reset, brownout, or power fail.
- 1.8V to 3.6V supply range using internal DCDC convertor or LDO decided by the underlying BLE stack.

5.2 Clocks and Timers

5.2.1 Clocks

The integrated high accuracy 32 MHz (±10 ppm) crystal oscillator helps with radio operation and reducing power consumption in the active modes.

The integrated on-chip 32.768 kHz RC oscillator (±250 ppm) provides protocol timing and helps with radio power consumption in the system StandByDoze and Deep Sleep modes by reducing the time that the RX window needs to be open.

To keep the on-chip 32.768 kHz RC oscillator within ±250 ppm (which is needed to run the BLE stack) accuracy, RC oscillator needs to be calibrated (which takes 16-17 mS) regularly. The default calibration interval is eight seconds which is enough to keep within ±250 ppm. The calibration interval ranges from 0.25 seconds to 31.75 seconds (in multiples of 0.25 seconds) and configurable via *smart*BASIC command at+cfg210.

5.2.2 Timers

In keeping with the event driven paradigm of *smart*BASIC, the timer subsystem enables *smart*BASIC applications to be written which allow future events to be generated based on timeouts.

- **Regular Timer** – There are eight built-in timers (regular timers) derived from a single RTC clock which are controlled solely by *smart*BASIC functions. The resolution of the regular timer is 976 microseconds.
- **Tick Timer –** A 31-bit free running counter that increments every (1) millisecond. The resolution of this counter is 488 microseconds. Use the functions GetTickCount() and GetTickSince() to access this counter.

Refer to the ***smart*BASIC User Guide** available from the Ezurio BL652 product page.

5.3 Memory for *smart*BASIC Application Code

You have up to 32 kbytes of data memory available for *smart*BASIC application script.

© Copyright 2025 Ezurio
All Rights Reserved

5.4 Radio Frequency (RF)

- 2402–2480 MHz Bluetooth Low Energy radio (1 Mbps and 2 Mbps over the air data rate).
- Tx output power of +4 dBm programmable (via *smart*BASIC command) to -20 dBm in steps of 4 dB.
- Tx Whisper mode1 -40 dBm (via *smart*BASIC command).
- Receiver (with integrated channel filters) to achieve maximum sensitivity -96 dBm @ 1 Mbps BLE.
- RF conducted interface available in the following two ways:
  - BL652-SA: RF connected to on-board antenna on BL652-SA
  - BL652-SC: RF connected to on-board IPEX MH4 RF connector on BL652-SC
- Antenna options:
  - Integrated monopole chip antenna on BL652-SA
  - External dipole antenna connected with to IPEX MH4 RF connector on BL652-SC
- Received Signal Strength Indicator (RSSI):
  - RSSI accuracy (valid range -90 to -20dBm) is ±2dB typical
  - RSSI resolution 1dB typical

5.5 NFC

NFC-A Listen mode compliant:

- Based on NFC forum specification
  - 13.56 MHz
  - Date rate 106 kbps
  - NFC-A tag (can only be a target/tag; cannot be an initiator)
- Modes of Operation:
  - Disable
  - Sense
  - Activated

5.5.1 Use Cases

- Touch-to Pair with NFC
- Launch a smartphone app (on Android)
- NFC enabled Out-of-Band Pairing
- System Wake-On-Field function
  - Proximity Detection

5.6 UART Interface

The Universal Asynchronous Receiver/Transmitter offers fast, full-duplex, asynchronous serial communication with built-in flow control support (UART_CTS, UART_RTS) in HW up to one Mbps baud. Parity checking and generation for the ninth data bit are supported.

UART_TX, UART_RX, UART_RTS, and UART_CTS form a conventional asynchronous serial data port with handshaking. The interface is designed to operate correctly when connected to other UART devices such as the 16550A. The signaling levels are nominal 0 V and 3.3 V (tracks VCC) and are inverted with respect to the signaling on an RS232 cable.

Two-way hardware flow control is implemented by UART_RTS and UART_CTS. UART_RTS is an output and UART_CTS is an input. Both are active low.

These signals operate according to normal industry convention. UART_RX, UART_TX, UART_CTS, UART_RTS are all 3.3 V level logic (tracks VCC). For example, when RX and TX are idle they sit at 3.3 V. Conversely for handshaking pins CTS, RTS at 0 V is treated as an assertion.

The module communicates with the customer application using the following signals:

- Port/TxD of the application sends data to the module's UART_RX signal line
- Port/RxD of the application receives data from the module's UART_TX signal line

© Copyright 2025 Ezurio
All Rights Reserved

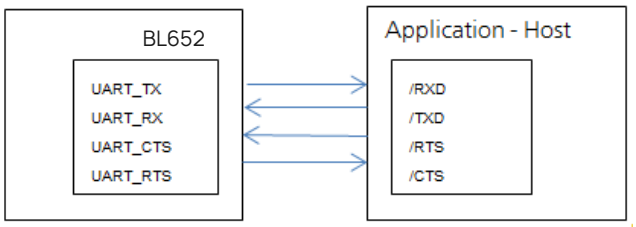

Figure 6: UART signals

Note: The BL652 serial module output is at 3.3V CMOS logic levels (tracks VCC). Level conversion must be added to interface with an RS-232 level compliant interface.

Some serial implementations link CTS and RTS to remove the need for handshaking. We do not recommend linking CTS and RTS other than for testing and prototyping. If these pins are linked and the host sends data at the point that the BL652 deasserts its RTS signal, then there is significant risk that internal receive buffers will overflow, which could lead to an internal processor crash. This will drop the connection and may require a power cycle to reset the module. We recommend that the correct CTS/RTS handshaking protocol be adhered to for proper operation.

Table 20: UART interface

Signal Name	Pin No	I/O	Comments
SIO_06 / UART_Tx	19	O	SIO_06 (alternative function UART_Tx) is an output, set high (in firmware).
SIO_08 / UART_Rx	17	I	SIO_08 (alternative function UART_Rx) is an input, set with internal pull-up (in firmware).
SIO_05 / UART_RTS	20	O	SIO_05 (alternative function UART_RTS) is an output, set low (in firmware).
SIO_07 / UART_CTS	18	I	SIO_07 (alternative function UART_CTS) is an input, set with internal pull-down (in firmware).

The UART interface is also used to load customer developed *smart*BASIC application script.

5.7 SPI Bus

The SPI interface is an alternate function on SIO pins, configurable by *smart*BASIC.

The BL652 module can be configured as SPI master and SPI Slave.

For successful SPI operations, the remote SPI master's CS, MISO, MOSI, and SCK should be connected directly to the module's CS, MISO, MOSI and SCK pins (respectively). The module's four SPI slave pins can be configured using the SpiSlaveConfig() function, which by default are 11 (CS), 17 (MISO), 18 (MOSI), and 19 (SCK). Special purpose pins such as nAutorun (13) and nReset (22) cannot be configured for SPI Slave operations.

The SPI interface enables full duplex synchronous communication between devices. It supports a 3-wire (SPI_MOSI, SPI_MISO, SPI_SCK,) bidirectional bus with fast data transfers to and from multiple slaves. Individual chip select signals are necessary for each of the slave devices attached to a bus, but control of these is left to the application through use of SIO signals. I/O data is double-buffered.

The SPI peripheral supports SPI mode 0, 1, 2, and 3.

Table 21: SPI interfaces

Signal Name	Pin No	I/O	Comments
SIO_23/SPI_MOSI	3	O	This interface is an alternate function configurable by *smart*BASIC. Default in the FW pin 3 and 38 are SIO inputs. SPIOPEN() in *smart*BASIC selects SPI function and changes pin 3 and 38 to outputs (when in SPI master mode).
SIO_24/SPI_MISO	2	I	
SIO_25/SPI_CLK	38	O	
Any_SIO/SPI_CS	4	I	SPI_CS is implemented using any spare SIO digital output pins to allow for multi-dropping. On Ezurio devboard SIO_22 (pin4) used as SPI_CS.

© Copyright 2025 Ezurio
All Rights Reserved

5.8 I2C Interface

The I2C interface is an alternate function on SIO pins, configurable by *smart*BASIC command.

The two-wire interface can interface a bi-directional wired-OR bus with two lines (SCL, SDA) and has master /slave topology. The interface is capable of clock stretching. Data rates of 100 kbps and 400 kbps are supported.

An I2C interface allows multiple masters and slaves to communicate over a shared wired-OR type bus consisting of two lines which normally sit at VCC. The BL652 module can only be configured as an I2C master with additional constraint that it be the only master on the bus. The SCL is the clock line which is always sourced by the master and SDA is a bi-directional data line which can be driven by any device on the bus.

IMPORTANT: It is essential to remember that pull-up resistors on both SCL and SDA lines are not provided in the module and MUST be provided external to the module.

Table 22: I2C interface

Signal Name	Pin No	I/O	Comments
SIO_26/I2C_SDA	37	I/O	This interface is an alternate function on each pin, configurable by *smart*BASIC. I2COPEN() in *smart*BASIC selects I2C function.
SIO_27/I2C_SCL	36	I/O	

5.9 General Purpose I/O, ADC, PWM and FREQ

5.9.1 GPIO

The 19 SIO pins are configurable by *smart*BASIC. They can be accessed individually. Each has the following user configured features:

- Input/output direction
- Output drive strength (standard drive 0.5 mA or high drive 5mA)
- Internal pull-up and pull-down resistors (13 K typical) or no pull-up/down
- Wake-up from high or low level triggers on all pins including NFC pins

5.9.2 ADC

The ADC is an alternate function on SIO pins, configurable by *smart*BASIC.

The BL652 provides access to 8-channel 8/10/12-bit successive approximation ADC in one-shot mode. This enables sampling up to 8 external signals through a front-end MUX. The ADC has configurable input and reference pre-scaling and sample resolution (8, 10, and 12 bit).

5.9.2.1 Analog Interface (ADC)

Table 23: Analog interface

Signal Name	Pin No	I/O	Comments
SIO_05/UART_RTS/AIN3 – Analog Input	20	I	This interface is an alternate function on each pin, configurable by *smart*BASIC. AIN configuration selected using GpioSetFunc() function. Configurable 8, 10, 12 bit resolution. Configurable voltage scaling 4, 2, 1/1, 1/3, 1/3, 1/4, 1/5, 1/6(default). Configurable acquisition time 3uS, 5uS, 10uS(default), 15uS, 20uS, 40uS. Full scale input range (VCC)
SIO_04/AIN2 – Analog Input	21	I	
SIO_03/AIN1 – Analog Input	22	I	
SIO_02/AIN0 – Analog Input	23	I	
SIO_31/AIN7 – Analog Input	32	I	
SIO_30/AIN6 – Analog Input	33	I	
SIO_29/AIN5 – Analog Input	34	I	
SIO_28/AIN4 – Analog Input	35	I	

5.9.3 PWM Signal Output on up to 12 SIO Pins

The PWM output is an alternate function on SIO pins, configurable by *smart*BASIC.

The ability to output a PWM (Pulse Width Modulated) signal on ALL GPIO (SIO) output pins can be selected using GpioSetFunc() function.

© Copyright 2025 Ezurio
All Rights Reserved

The **PWM output** signal has a frequency and duty cycle property. Frequency is adjustable (up to 1MHz) and the duty cycle can be set over a range from 0% to 100% (both configurable by *smart*BASIC command).

5.9.4 FREQ Signal Output on up to 2 SIO Pins

The FREQ output is an alternate function on SIO pins, configurable by *smart*BASIC.

The ability to output a FREQ output signal on 2 GPIO (SIO) output pins can be selected using GpioSetFunc() function.

Note: The frequency driving each of the two SIO pins is the same but the duty cycle can be independently set for each pin.

FREQ output signal frequency can be set over a range of 0Hz to 4 MHz (with 50% mark-space ratio).

5.10 nRESET pin

Table 24: nRESET pin

Signal Name	Pin No	I/O	Comments
nRESET	7	I	BL652 HW reset (active low). Pull the nRESET pin low for minimum 100mS in order for the BL652 to reset.

5.11 nAutoRUN pin

Refer to *nAutoRUN pin and Operating Modes* regarding operating modes and the nAutoRUN pin. _nAutoRUN_pin_and

- Self-contained Run mode
- Interactive/Development mode

5.12 vSP Command Mode

This section discusses VSP Command mode through pulling SIO_2 high and nAutoRUN low. Read this section in conjunction with the *VSP Configuration* chapter of the BL652 *smart*BASIC Extensions Guide, found in the documentation tab of the **BL652 product page**.

Figure 7 shows the difference between VSP Bridge to UART mode and VSP Command mode and how SIO_02 and nAutoRUN must be configured to select between these two modes.

- **VSP Bridge to UART mode** takes data sent from phone or tablet (over BLE) and sends to BL652 to be sent out of the BL652 UART (therefore data not stored on BL652).
- **VSP Command mode** takes data sent from phone or tablet and sends to BL652 which will interpret as an AT command and response will be sent back. The OTA Android or iOS application can be used to download any *smart*BASIC application script over the air to the BL652 because a *smart*BASIC application is downloaded using AT commands.

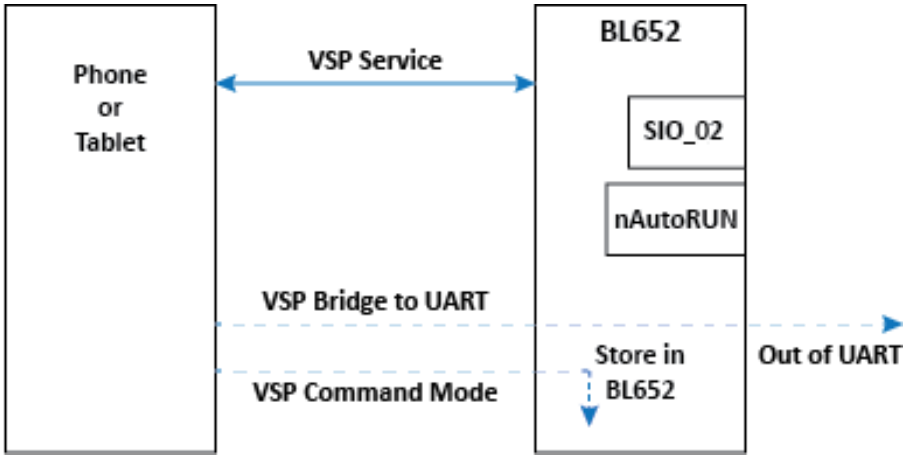

Figure 7: Differences between VSP bridge to UART mode and VSP Command mode

© Copyright 2025 Ezurio
All Rights Reserved

Table 25: vSP modes

Mode	SIO_02	nAutoRUN
VSP Bridge to UART Mode	High	High
VSP Command Mode	High	Low

SIO_02 High (externally) selects the VSP service. When SIO_02 is High and nAutoRUN is Low (externally), this selects VSP Command mode. When SIO_02 is High and nAutoRUN is High (externally), this selects VSP Bridge to UART mode.

When SIO_02 on module is set HIGH (externally), VSP is enabled and auto-bridged to UART when connected. However, for VSP Command mode, auto-bridge to UART is not required. With SIO_02 set to High and nAutoRUN set to Low, the device enters VSP Command mode and you can then download the *smart*BASIC application onto the module over the air from the phone (or tablet).

5.13 Two-wire Interface JTAG

The BL652 Firmware hex file consists of four elements:

- *smart*BASIC runtime engine
- Softdevice
- Master Bootloader

Ezurio BL652 *smart*BASIC firmware (FW) image part numbers are referenced as w.x.y.z (ex. v28.x.y.z). The BL652 *smart*BASIC runtime engine and Softdevice combined image can be upgraded by the customer over the UART interface.

You also have the option to use the two-wire (JTAG) interface, during production, to clone the file system of a Golden preconfigured BL652 to others using the Flash Cloning process. This is described in the app note Flash Cloning for the BL652. In this case the file system is also part of the .hex file.

Signal Name	Pin No	I/O	Comments
SWDIO	5	I/O	Internal pull-up resistor
SWDCLK	6	I	Internal pull-down resistor

The Ezurio DVK-BL652 development board incorporates an on-board JTAG J-link programmer for this purpose. There is also the following JTAG connector which allows on-board JTAG J-link programmer signals to be routed off the development board. The only requirement is that you should use the following JTAG connector on the host PCB.

The JTAG connector MPN is as follows:

Reference	Part	Description and MPN (Manufacturers Part Number)
JP1	FTSH-105	Header, 1.27mm, SMD, 10-way, FTSH-105-01-L-DV Samtech

Note: Reference on the BL652 development board schematic (Figure 8) shows the DVK-BL652-xx development schematic wiring only for the JTAG connector and the BL652 module JTAG pins.

© Copyright 2025 Ezurio
All Rights Reserved

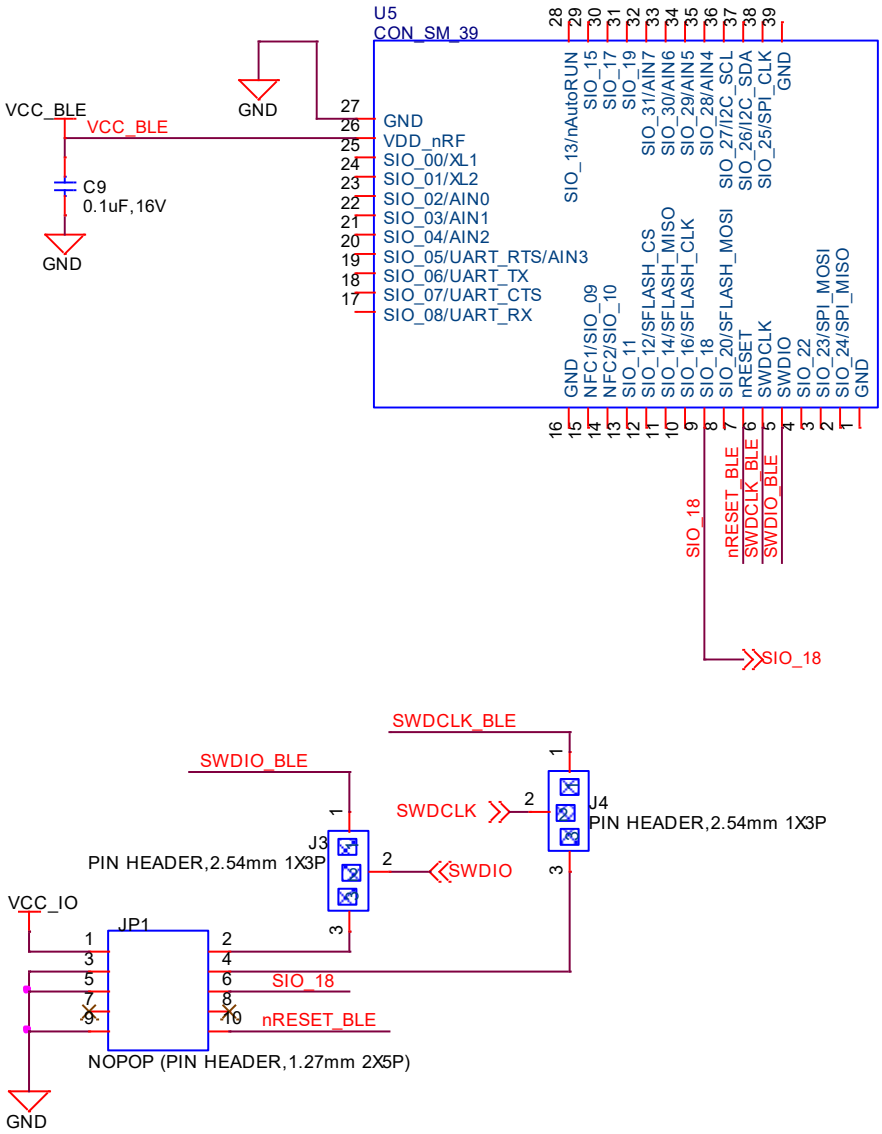

Figure 8: BL652 development board schematic

Note: J3 and J4 (on the DVK-BL652-xx development board allows Ezurio on-board JTAG J-link programmer signals to be routed off the development board by fitting jumpers in the J3 pins (2-3) and J4 pins (2-3).

Ezurio recommends you use JTAG (2-wire interface) to handle future BL652 module firmware upgrades. You MUST wire out the JTAG (2-wire interface) on your host design (see Figure 8, where four lines should be wired out, namely SWDIO, SWDCLK, GND and VCC). Firmware upgrades can still be performed over the BL652 UART interface, but this is slower (60 seconds using UART vs. 10 seconds when using JTAG) than using the BL652 JTAG (2-wire interface).

SIO_18 is a Trace output (called SWO, Serial Wire Output) and is not necessary for programming BL652 over the SWD interface.

nReset_BLE is not necessary for programming BL652 over the SWD interface.

© Copyright 2025 Ezurio
All Rights Reserved

5.14 BL652 Wakeup

5.14.1 Waking Up BL652 from Host

Wake the BL652 from the host using wake-up pins (any SIO pin). Refer to the *smart*BASIC user guide for details. You may configure the BL652's wakeup pins via *smart*BASIC to do any of the following:

- Wake up when signal is low
- Wake up when signal is high
- Wake up when signal changes

Refer to the *smart*BASIC user guide for details. You can access this guide from the Ezurio BL652 product page.

5.15 Low Power Modes

The BL652 has three power modes: Run, Standby Doze, and Deep Sleep.

The module is placed automatically in Standby Doze if there are no pending events (when WAITEVENT statement is encountered within a customer's *smart*BASIC script). The module wakes from Standby Doze via any interrupt (such as a received character on the UART Rx line). If the module receives a UART character from either the external UART or the radio, it wakes up.

Deep sleep is the lowest power mode. Once awakened, the system goes through a system reset.

5.16 Temperature Sensor

The on-silicon temperature sensor has a temperature range greater than or equal to the operating temperature of the device. Resolution is 0.25 degrees.

To read temperature from on-silicon temperature sensor (in tenth of centigrade, so 23.4°C is output as 234):

- In command mode, use **ATI2024**
  or
- From running from a running *smart*BASIC application script, use **SYSINFO(2024)**

5.17 Random Number Generator

Exposed via an API in *smart*BASIC (see *smart*BASIC documentation available from the BL652 product page).

The **rand()** function from a running *smart*BASIC application returns a value.

5.18 AES Encryption/Decryption

Exposed via an API in *smart*BASIC (see *smart*BASIC documentation available from the BL652 product page).

Function called **aesencrypt** and **aesdecrypt**.

5.19 Optional External Serial (SPI) Flash

This is not required for normal BL652 module opertion.

If you fit an optional external serial (SPI) flash (such as for data logging purpose) then that external serial (SPI) flash must connect to BL652 module pins SIO_12 (SFLASH_CS), SIO_14 (SFLASH_MISO), SIO_16 (SFLASH_CLK), and SIO_20 (SFLASH_MOSI); in that case a high level API in *smart*BASIC can be used for fast access using open/close /read/write API functions.

Note: By default, these are GPIO pins. Only when in their FlashOpen() *smart*BASIC app are these lines dedicated to SPI and for talking to the off-module board SPI flash.

If you decide to use external serial (SPI) flash with the BL652-SX-xx, then ONLY the manufacturer part numbers below MUST be used:

- **4-Mbit Macronix MX25R4035F**
  http://www.macronix.com/Lists/DataSheet/Attachments/3288/MX25R4035F,%20Wide%20Range,%204Mb,%20v1.2.pdf

© Copyright 2025 Ezurio
All Rights Reserved

- **8-Mbit Macronix MX25R8035F**
  http://www.macronix.com/Lists/DataSheet/Attachments/3532/MX25R8035F,%20Wide%20Range,%208Mb,%20v1.2.pdf

For any external serial (SPI) flash other than these part numbers, *smart*BASIC does not provide access.

5.20 Optional External 32.768 kHz crystal

This is not required for normal BL652 module operation.

The BL652 uses the on-chip 32.76 kHz RC oscillator (LFCLK) by default (which has an accuracy of ±250 ppm) which requires regulator calibration (every eight seconds) to within ±250 ppm.

You can connect an optional external high accuracy (±20 ppm) 32.768 kHz crystal to the BL652-SX-xx pins, SIO_01/XL2 (pin 24) and SIO_00/XL1 (pin 25) to provide improved protocol timing and to help with radio power consumption in the system standby doze/deep sleep modes by reducing the time that the RX window needs to be open. Table 26 compares the current consumption difference between RC and crystal oscillator.

Table 26: Comparing current consumption difference between BL652 on-chip RC 32.76 kHz oscillator and optional external crystal (32.768kHz) based oscillator

	BL652 On-chip 32.768 kHz RC Oscillator (±250 ppm) LFRC	Optional External Higher Accuracy (±20 ppm) 32.768 kHz Crystal-based Oscillator XO
Current Consumption of 32.768 kHz Block	0.6 uA	0.25 uA
Standby Doze Current	2.0 uA	2.0 uA
Calibration	Calibration required regularly (default eight seconds interval) Calibration takes 16-17 ms; with DCDC used, the total charge of a calibration event is 7.4 uC. The average current consumed by the calibration depends on the calibration interval and can be calculated using the following formula: **CAL_charge/CAL_interval** The lowest calibration interval (0.25 seconds) provides an average current of (DCDC enabled): **7.4uC / 0.25s = 29.6uA** To get the 250 ppm accuracy, the BLE stack specification states that a calibration interval of eight seconds is enough. This gives an average current of: **7.4uC / 8s = 0.93 uA** Added to the LFRC run current and Standby Doze (IDLE) base current shown above results in a total average current of: **LFRC + CAL = 1.8 + 0.93 = 2.7uA**	Not applicable
Total	2.7 uA	1.45 uA
Summary	• Low current consumption • Accuracy 250 ppm	• Lowest current consumption • Needs external crystal • High accuracy (depends on the crystal, usually 20 ppm)

© Copyright 2025 Ezurio
All Rights Reserved

Table 27: Optional external 32.768 kHz crystal specification

Optional external 32.768kHz crystal	Min	Typ	Max
Crystal Frequency	-	32.768 kHz	-
Frequency tolerance requirement of BLE stack	-	-	±250 ppm
Load Capacitance	-	-	12.5 pF
Shunt Capacitance	-	-	2 pF
Equivalent series resistance	-	-	100 kOhm
Drive level	-	-	1 uW
Input capacitance on XL1 and XL2 pads	-	4 pF	-
Run current for 32.768 kHz crystal based oscillator	-	0.25 uA	-
Startup time for 32.768 kHz crystal based oscillator	-	0.25 seconds	-
Peak to peak amplitude for external low swing clock input signal must not be outside supply rails	200 mV	-	1000 mV

Be sure to tune the load capacitors on the board design to optimize frequency accuracy (at room temperature) so it matches that of the same crystal standalone, Drive Level (so crystal operated within safe limits) oscillation margin (R_{neg} is at least 3 to 5 times ESR) over the operating temperature range.

© Copyright 2025 Ezurio
All Rights Reserved

5.21 BL652-SA On-board Chip Antenna Characteristics

The BL652-SA on-board chip monopole antenna radiated performance depends on the host PCB layout.

The BL652 development board was used for BL652 development and antenna performance evaluation. To obtain similar performance, follow guidelines in section *PCB Layout on Host PCB for BL652-SA* to allow the on-board antenna to radiate and reduce proximity effects due to nearby host PCB GND copper or metal covers._PCB_Layout_on

BL652-SA on-board chip antenna datasheet: http://www.acxc.com.tw/product/at/at3216/AT3216-B2R7HAA_S-R00-N198_2.pdf

Unit in dBi @2.44GHz	XY-plane		XZ-plane		YZ-plane		Efficiency
	Peak	Avg	Peak	Avg	Peak	Avg	
AT3216-B2R7HAA	-5.1	-8.7	-1.3	-7.4	-5.1	-8.7	25.0%

◆XY-plane ◆XZ-plane ◆YZ-plane

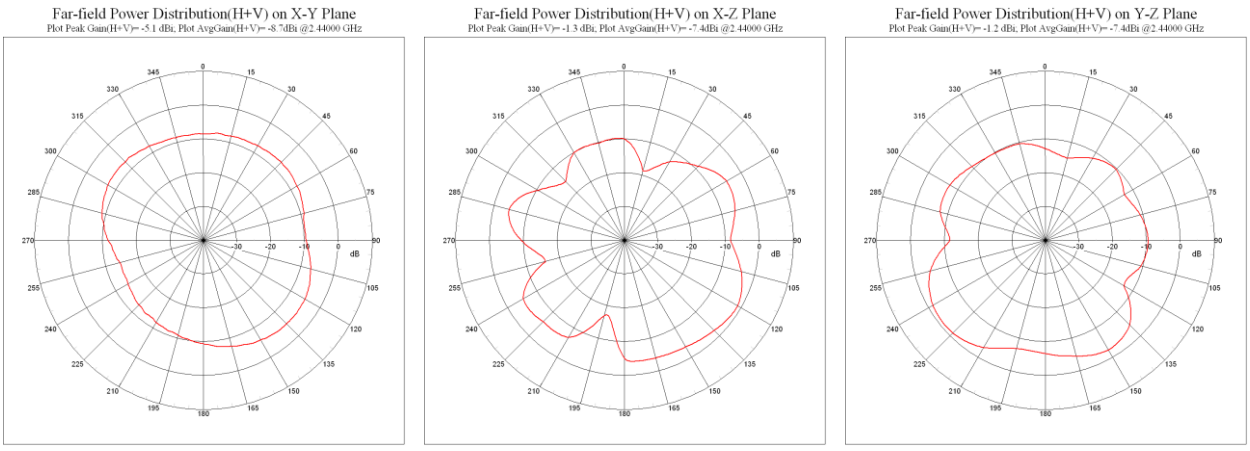

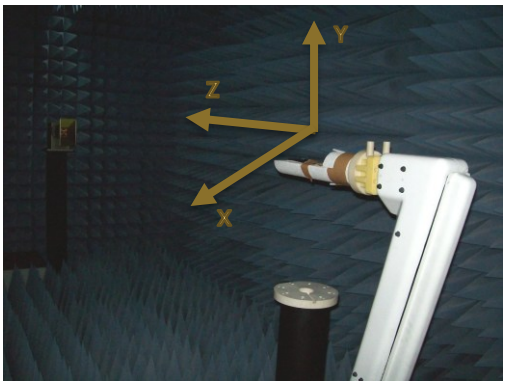

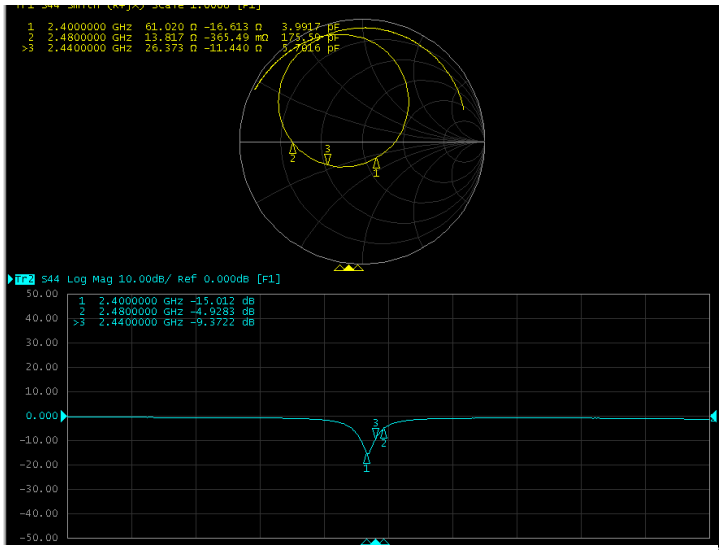

Figure 9: BL652-SA on-board chip antenna performance (Antenna Gain, efficiency and S11 (whilst BL652-SA-xx module on DVK-BL652-xx development board)

© Copyright 2025 Ezurio
All Rights Reserved

6 Hardware Integration Suggestions

6.1 Circuit

The BL652 is easy to integrate, requiring no external components on your board apart from those which you require for development and in your end application.

The following are suggestions for your design for the best performance and functionality.

Checklist (for Schematic):

- **VCC pins**
  External power source should be within the operating range, rise time and noise/ripple specification of the BL652. Add decoupling capacitors for filtering the external source. Power-on reset circuitry within BL652 series module incorporates brown-out detector, thus simplifying your power supply design. Upon application of power, the internal power-on reset ensures that the module starts correctly.
- **VCC and coin-cell operation**
  With built-in DCDC (operating range 1.7V to 3.6V), reduces the peak current required from a coin-cell (CR2032), making it easier to use with coin-cell.
- **AIN (ADC) and SIO pin IO voltage levels**
  BL652 SIO voltage levels are at VCC. Ensure input voltage levels into SIO pins are at VCC also (if VCC source is a battery whose voltage will drop). Ensure ADC pin maximum input voltage for damage is not violated.
- **AIN (ADC) impedance and external voltage divider setup**
  If you need to measure with ADC a voltage higher than 3.6V, you can connect a high impedance voltage divider to lower the voltage to the ADC input pin.
- **JTAG**
  This is REQUIRED as *smart*BASIC runtime engine firmware can be loaded using the JTAG (as well as the UART.)
  Ezurio recommends you use JTAG (2-wire interface) to handle future BL652 module firmware upgrades. You MUST wire out the JTAG (2-wire interface) on your host design (see Figure 8, where four lines should be wired out, namely SWDIO, SWDCLK, GND and VCC). Firmware upgrades can still be performed over the BL652 UART interface, but this is slower (60 seconds using UART vs. 10 seconds when using JTAG) than using the BL652 JTAG (2-wire interface).
  JTAG may be used if you intend to use Flash Cloning during production to load *smart*BASIC scripts.
- **UART**
  Required for loading your *smart*BASIC application script during development (or for subsequent firmware upgrades (except JTAG for FW upgrades and/or Flash Cloning of the *smart*BASIC application script). Add connector to allow interfacing with UART via PC (UART–RS232 or UART-USB).
- **UART_RX and UART_CTS**
  SIO_8 (alternative function UART_RX) is an input, set with internal weak pull-up (in firmware). The pull-up prevents the module from going into deep sleep when UART_RX line is idling.
  SIO_7 (alternative function UART_CTS) is an input, set with internal weak pull-down (in firmware). This pull-down ensures the default state of the UART_CTS will be asserted which means can send data out of the UART_TX line. Ezurio recommends that UART_CTS be connected.
- **nAutoRUN pin and operating mode selection**
  nAutoRUN pin needs to be externally held high or low to select between the two BL652 operating modes at power-up:
  - Self-contained Run mode (nAutoRUN pin held at 0V).
  - Interactive / development mode (nAutoRUN pin held at VCC).
    Make provision to allow operation in the required mode. Add jumper to allow nAutoRUN pin to be held high or low (BL652 has internal 13K pull-down by default) OR driven by host GPIO.
- **I2C**
  It is essential to remember that pull-up resistors on both I2C_SCL and I2C_SDA lines are not provided in the BL652 module and MUST be provided external to the module as per I2C standard.
- **SPI**
  Implement SPI chip select using any unused SIO pin within your *smart*BASIC application script then SPI_CS is controlled from *smart*BASIC application allowing multi-dropping.

© Copyright 2025 Ezurio
All Rights Reserved

- **SIO pin direction**
  BL652 modules shipped from production with *smart*BASIC runtime engine FW, all SIO pins (with default function of DIO) are mostly digital inputs (see Pin Definitions Table2). Remember to change the direction SIO pin (in your *smart*BASIC application script) if that particular pin is wired to a device that expects to be driven by the BL652 SIO pin configured as an output. Also, these SIO pins have the internal pull-up or pull-down resistor-enabled by default in firmware (see Pin Definitions Table 2). This was done to avoid floating inputs, which can cause current consumption in low power modes (e.g. StandbyDoze) to drift with time. You can disable the PULL-UP or Pull-down through their *smart*BASIC application.

  Note: Internal pull-up, pull down will take current from VCC.

- **SIO_02 pin** and OTA *smart*BASIC application download feature

  SIO_02 is an input, set with internal pull-down (in FW). Refer to latest firmware release documentation on how SIO_02 is used for Over the Air *smart*BASIC application download feature. SIO_02 pin has to be pulled high externally to enable the feature. Decide if this feature is required in production. When SIO_02 is high, ensure nAutoRun is NOT high at same time; otherwise, you cannot load the *smart*BASIC application script.

- **NFC antenna connector**
  To make use of the Ezurio flexi-PCB NFC antenna, fit connector:
  Description: FFC/FPC Connector, Right Angle, SMD/90d, Dual Contact,1.2 mm Mated Height
  Manufacturer: Molex
  Manufacturers Part number: 512810594
  Add tuning capacitors of 300 pF on NGC1 pin to GND and 300 pF on NFC2 pins to GND if the PCB track length is similar as DVK-BL652 devboard.

- **nRESET pin (active low)**
  Hardware reset. Wire out to push button or drive by host.
  By default module is out of reset when power applied to VCC pins.

- **Optional External 32.768kHz crystal**
  If the optional external 32.768kHz crystal is needed, then use a crystal that meets specification.

- **Optional External serial SPI flash IC** If the optional external serial (SPI) flash is required, ensure that manufacturer part number tested by Ezurio are used.

6.2 PCB Layout on Host PCB - General

Checklist (for PCB):

- MUST locate BL652-Sx module close to the edge of PCB (mandatory for BL652-SA for on-board chip antenna to radiate properly).
- Use solid GND plane on inner layer (for best EMC and RF performance).
- All module GND pins MUST be connected to host PCB GND.
- Place GND vias close to module GND pads as possible.
- Unused PCB area on surface layer can flooded with copper but place GND vias regularly to connect copper flood to inner GND plane. If GND flood copper underside the module then connect with GND vias to inner GND plane.
- Route traces to avoid noise being picked up on VCC supply and AIN (analogue) and SIO (digital) traces.
- Ensure no exposed copper is on the underside of the module (refer to land pattern of BL652 development board).

6.3 PCB Layout on Host PCB for BL652-SA

6.3.1 Antenna Keep-out on Host PCB

The BL652-SA has an integrated chip antenna, and its performance is sensitive to host PCB. It is critical to locate the BL652-SA on the edge of the host PCB (or corner) to allow the antenna to radiate properly. Refer to guidelines in section ***PCB land pattern and antenna keep-out area for BL652-SA***. Some of those guidelines repeated below.

- Ensure there is no copper in the antenna keep-out area on any layers of the host PCB. Keep all mounting hardware and metal clear of the area to allow proper antenna radiation.
- For best antenna performance, place the BL652-SA module on the edge of the host PCB, preferably in the corner with the antenna facing the corner.

© Copyright 2025 Ezurio
All Rights Reserved

- The BL652 development board has the BL652-SA module on the edge of the board (not in the corner). The antenna keep-out area is defined by the BL652 development board which was used for module development and antenna performance evaluation is shown in Figure 10, where the antenna keep-out area is ~4.95mm wide, 25.65 mm long; with PCB dielectric (no copper) height 0.85 mm sitting under the BL652-SA antenna.
- The BL652-SA antenna is tuned when BL652-SA is sitting on development board (host PCB) with size of 120 mm x 93 mm.
- A different host PCB thickness dielectric will have small effect on antenna.
- The antenna-keep-out defined in the Host PCB Land Pattern and Antenna Keep-out for BL652-SA section._Host_PCB_Land
- Host PCB land pattern and antenna keep-out for the BL652 applies when the BL652-SA is placed in the corner of the host PCB. When BL652-SA cannot be placed as such, it must be placed on the edge of the host PCB and the antenna keep out must be observed. Figure 10 shows an example.

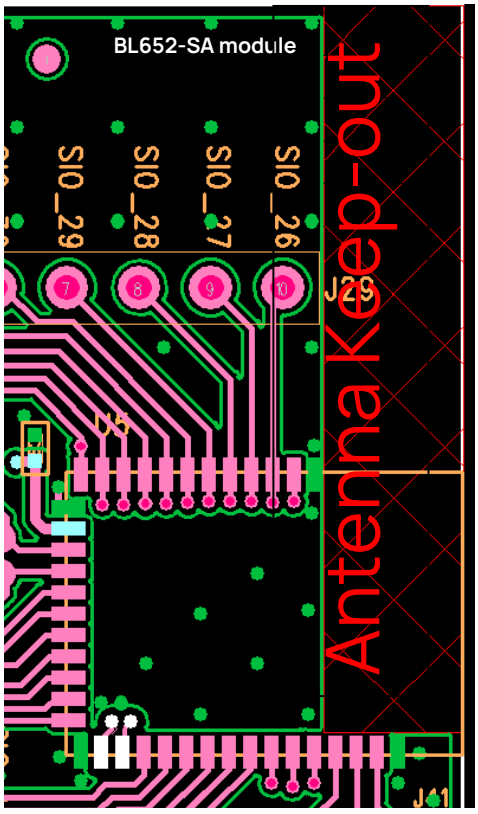

Figure 10: Antenna keep-out area (shown in red), corner of the BL652 development board for BL652-SA module.

Antenna Keep-out Notes:

Note 1	The BL652 module is placed on the edge of the host PCB.
Note 2	Copper cut-away on all layers in the *Antenna Keep-out* area under BL652 on host PCB.

6.3.2 Antenna Keep-out and Proximity to Metal or Plastic

Checklist (for metal /plastic enclosure):

- Minimum safe distance for metals without seriously compromising the antenna (tuning) is 40 mm top/bottom and 30 mm left or right.
- Metal close to the BL652-SA chip monopole antenna (bottom, top, left, right, any direction) will have degradation on the antenna performance. The amount of that degradation is entirely system dependent, meaning you will need to perform some testing with your host application.
- Any metal closer than 20 mm will begin to significantly degrade performance (S11, gain, radiation efficiency).
- It is best that you test the range with a mock-up (or actual prototype) of the product to assess effects of enclosure height (and materials, whether metal or plastic).

© Copyright 2025 Ezurio
All Rights Reserved

6.4 External Antenna Integration with BL652-SC

Please refer to the regulatory sections for FCC, ISED, EU, and Japan for details of use of BL652-Sx with external antennas in each regulatory region. _FCC_and_IC_FCC_and_IC_CE_Regulatory_Japan_(MIC)_Regulatory

The BL652 family has been designed to operate with the below external antennas (with a maximum gain of 2.0 dBi). The required antenna impedance is 50 ohms. See Table 28. External antennas improve radiation efficiency.

Table 28: External antennas for the BL652

Model	Type	Connector	Peak Gain (dBi)
LSR FlexPIFA 001-0022	FlexPIFA	MHF4	2400 – 2480 MHz 2dBi
LSR FlexNotch 001-0023	Flexible Notch	MHF4	2400 – 2480 MHz 2dBi
MAG. LAYERS EDA-8709-2G4C1-B27	Dipole	MHF4	2.4 GHz – 2.5 GHz 2dBi
Walsin RFDPA870910EMAB302	Dipole	MHF4	2.4 GHz – 2.5 GHz 2dBi
Walsin RFDPA870900SBAB8G1	Dipole	MHF4	2.4 GHz – 2.5 GHz 2dBi
YAMAMOTO METAL YAN-02-C-MHF4P-050	Chip	MHF4	2.4 GHz – 2.5 GHz -1.76 dBi
Ezurio (Laird Connectivity) PCA-4606-2G4C1-A33-CY Ezurio (Laird Connectivity) #0600-00056	PCB Dipole	IPEX	2.4 GHz – 2.5 GHz 2.21dBi
Ezurio (Laird Connectivity) EFA2400A3S-10MH4L	mFlexPIFA	MHF4	2.4 GHz – 2.5 GHz 2dBi

Note 1: Integral RF co-axial cable (1.13 mm OD) with length 100±5 mm and MHF4 compatible connector.
These antennas are available through Laird, Mouser, or Digikey. Search their stock for part numbers 0600-00056 and 0600-00057.

© Copyright 2025 Ezurio
All Rights Reserved

7 Mechanical Details

7.1 BL652 Mechanical Details

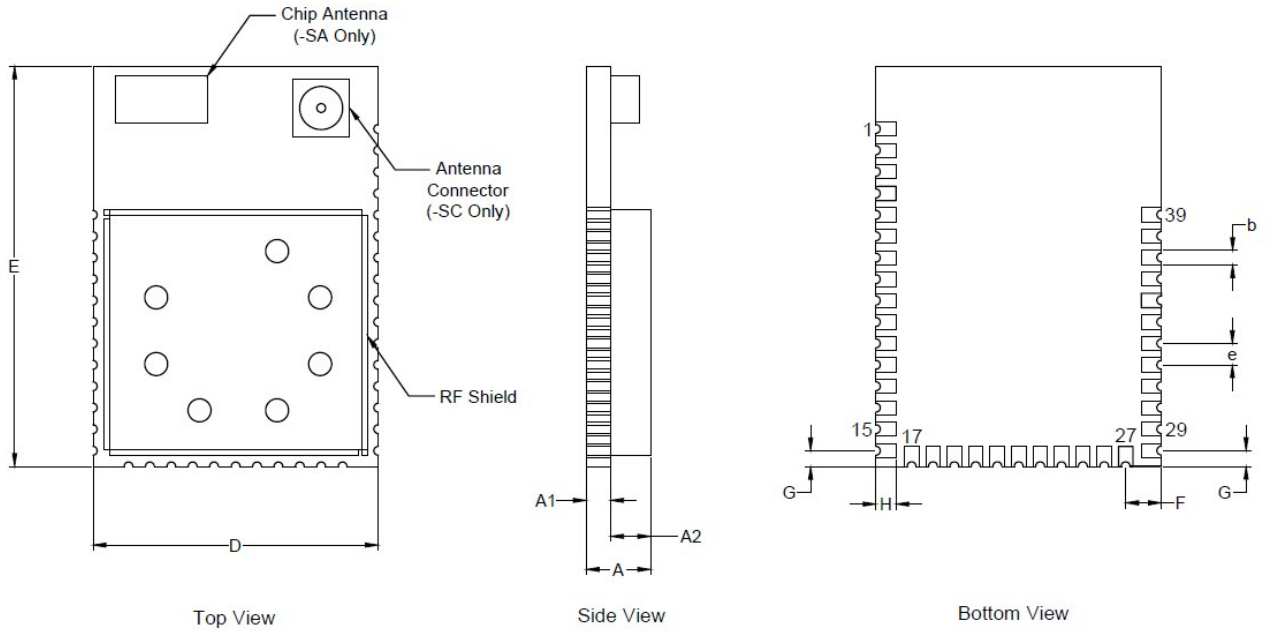

Description	BL652 A1			
Size	14.0 x 10.0 x 2.1 mm			
Pitch	0.75mm			
Dimension	Minimum	Typical	Maximum	Notes
A		2.1		
A1	0.50	0.60	0.70	PCB Thickness
A2		1.5		RF Shield Height
b		0.5		Global pad width
D	9.87	10.0	10.13	
E	13.87	14.0	14.13	
e		0.75		Global pitch
F		1.25		Pad Center to Board edge
G		0.55		Pad Center to Board edge
H		0.7		Global length of pad to edge of board
Units	mm			

Figure 11: BL652 mechanical drawings

Development Kit Schematics can be found in the software downloads tab of the BL652 product page:
https://www.ezurio.com/bl652-ble-module

© Copyright 2025 Ezurio
All Rights Reserved

7.2 Host PCB Land Pattern and Antenna Keep-out for BL652-SA

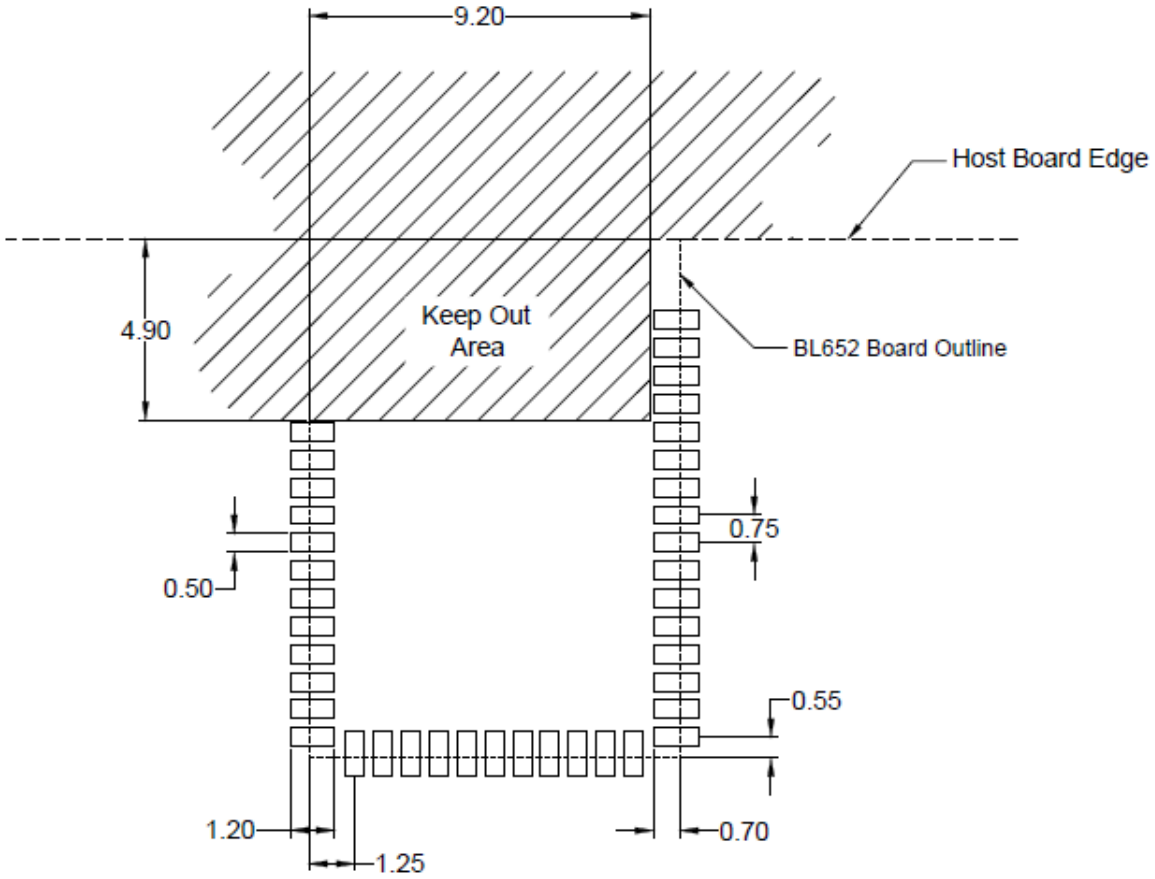

Figure 12: Land pattern and Keep-out for BL652-SA

All dimensions are in mm.

Host PCB Land Pattern and Antenna Keep-out for BL652-SANotes:

Note 1	Ensure there is no copper in the antenna 'keep out area' on any layers of the host PCB. Also keep all mounting hardware or any metal clear of the area (Refer to 6.3.2) to reduce effects of proximity detuning the antenna and to help antenna radiate properly.
Note 2	For the best on-board antenna performance, the module BL652-SA MUST be placed on the edge of the host PCB and preferably in the corner with the antenna facing the corner. Above "Keep Out Area" is the module placed in corner of PCB. If BL652-SA is not placed in corner but on edge of host PCB, the antenna "Keep Out Area" is extended (see Note 4).
Note 3	BL652 development board has BL652-SA placed on the edge of the PCB board (and not in corner) for that the Antenna keep out area is extended down to the corner of the development board, see section *PCB Layout on Host PCB for BL652-SA*, Figure 12. This was used for module development and antenna performance evaluation.
Note 4	Ensure that there is no exposed copper under the module on the host PCB.
Note 5	You may modify the PCB land pattern dimensions based on their experience and/or process capability.

© Copyright 2025 Ezurio
All Rights Reserved

8 Application Note for Surface Mount Modules

8.1 Introduction

Ezurio surface mount modules are designed to conform to all major manufacturing guidelines. This application note is intended to provide additional guidance beyond the information that is presented in the User Manual. This Application Note is considered a living document and will be updated as new information is presented.

The modules are designed to meet the needs of several commercial and industrial applications. They are easy to manufacture and conform to current automated manufacturing processes.

8.2 Shipping

1.1.1 Tape and Reel Package Information

Note: Ordering information for tape and reel packaging involves the addition of T/R to the end of the full module part number. For example, BL652-SA-0x becomes BL652-SA-0x-T/R.

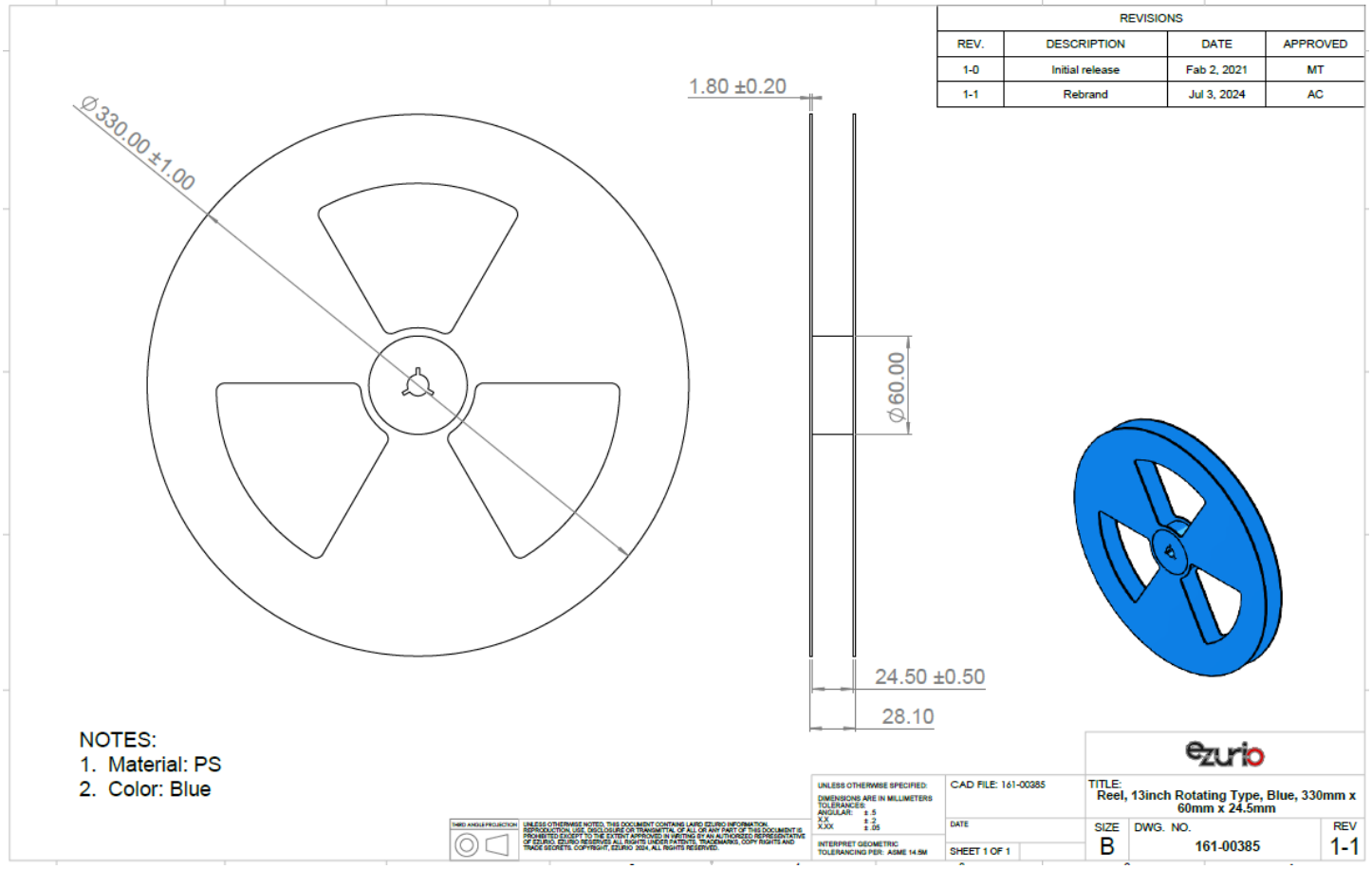

Figure 13: Reel specifications

© Copyright 2025 Ezurio
All Rights Reserved

ITRM	W	A0	B0	K0	P	F	E	S0	D0	D1	P0	P2	T
DIM	24	10.30	14.30	2.40	16	11.50	1.75	22.25	1.50	1.50	4.00	2.00	0.35
TOLE	+0.30 -0.30	+0.30 -0.0	+0.30 -0.0	+0.20 -0.00	+0.10 -0.10	+0.10 -0.10	+0.10 -0.10	+0.10 -0.10	+0.10 -0.00	+0.10 -0.00	+0.10 -0.10	+0.10 -0.10	+0.05 -0.05

REVISIONS			
REV.	DESCRIPTION	DATE	APPROVED
1-0	Initial release	Oct 5, 2020	MT
1-1	Rebrand	Jul 3, 2024	AC

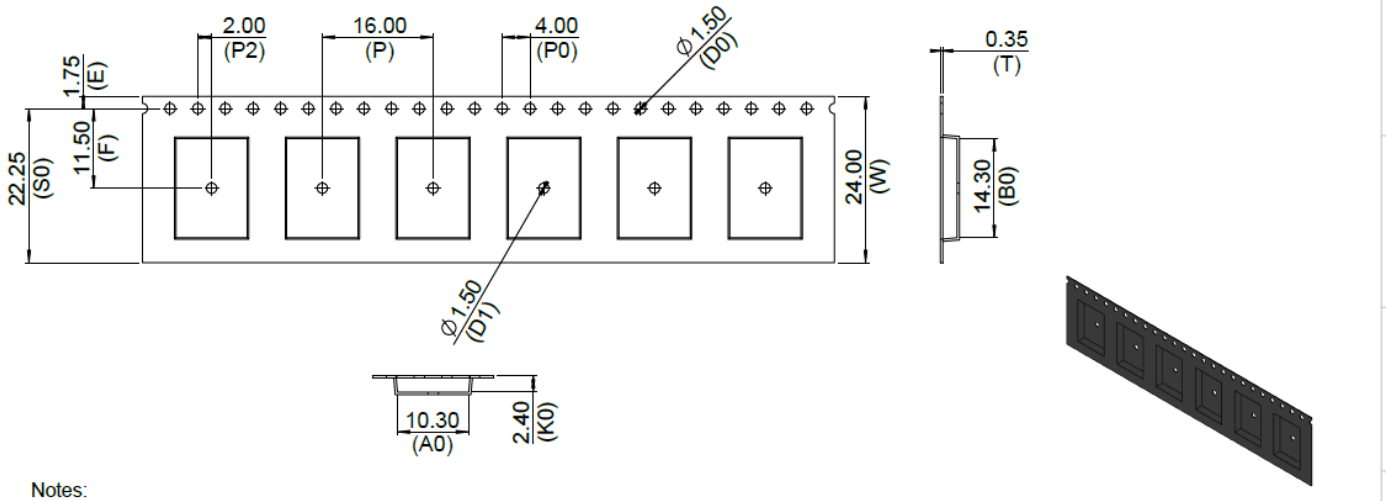

Notes:
1. Material: Conductive polystyrene, Black
2. The number of meters per package:17M

UNLESS OTHERWISE SPECIFIED:
DIMENSIONS ARE IN MILLIMETERS
TOLERANCES:
ANGULAR: ± .5
X.X ± .2
X.XX ± .05
INTERPRET GEOMETRIC TOLERANCING PER: ASME 14.5M

CAD FILE: 161-00384
DATE
SHEET 1 OF 1

TITLE: Carrier Tape, Conductive Polystyrene, Black, 10.3mm x 14.3mm x 2.4mm
SIZE B | DWG. NO. 161-00384 | REV 1-1

Figure 14: Tape specifications

There are 1,000 BL652 modules taped in a reel (and packaged in a pizza box) and five boxes per carton (5000 modules per carton). Reel, boxes, and carton are labeled with the appropriate labels. See Package Specification for more information.

8.2.1 Package Specification

The following is the specification of the package shipped for the BL652 modules.

© Copyright 2025 Ezurio
All Rights Reserved

ITEM NO.	PART NUMBER	REV.	DESCRIPTION	QTY.
1	453-00065	1-3	Module, BL652, Integrated Antenna	1000
2	161-00384	1-1	Carrier Tape, Conductive Polystyrene, Black, 10.3mm x 14.3mm x 2.4mm	1
3	161-00372	1-1	Cover Tape, Anti-static Polyester, 21.3mm x 0.05mm	1
4	161-00373	1-1	Bag, ESD and Moisture Barrier, Silver, 520mm x 420mm x 0.15mm	1
5	160-01947	1-1	Label, Moisture Sensitivity Level 4, 50mm x 70mm	1
6	161-00374	1-1	Box, Single-Wall Corrugated E Flute, 338mm x 343mm x 68mm	1
7	161-00385	1-1	Reel, 13inch Rotating Type, Blue, 330mm x 60mm x 24.5mm	1
8	161-00375	1-1	Carton, Double-Wall, AB Flute, 368mm x 354mm x 362mm	1
9	160-02074	1-2	Label, Product Identifier, Bluetooth, Bag and Reel, 38mm x 19mm	3
10	160-02076	1-2	Label, Carton Product Identifier, Bluetooth, 150mm x 100mm	2
11	161-00020	1-0	Desiccant, Silica Gel, 66g, 125mm x 80mm	1
12	161-00387	1-1	Humidity Indicator Card, Minimum 60% RH, Six Spot Indication, 38mm x 105mm	1
13	160-02075	1-1	Label, Caution ESD, Yellow, 51mm x 51mm	1

REVISIONS			
REV.	DESCRIPTION	DATE	APPROVED
1-0	Initial release	Oct 14, 2020	AC
1-1	Date code format change & UKCA logo added to reel/bag/box/carton labels	Jun 2, 2021	AC
1-2	BL654 RF shielding (110-00766) drawing correction	Jun 3, 2021	AC
1-3	1.Rebrand 2.Label hold revision 01, only the frame revision is minor changed	Aug 12, 2024	AC

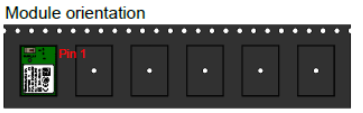

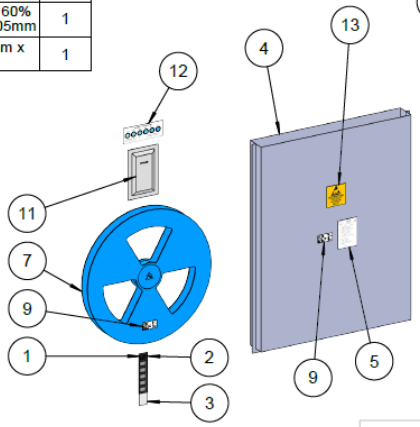

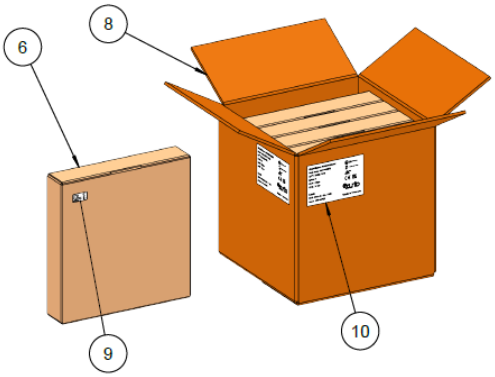

Notes:
1.Put the Module in the carrier tape.
2.Put the Reel, Desiccant and Humidity Indicator Card in the ESD bag.
3.Put the packed ESD bag (vacuum) in the box.
4.Put the box in the carton.
5.Module packaging quantity:
Per Reel: 1000 PCS
Per Carton: 5000PCS

ezurio

UNLESS OTHERWISE SPECIFIED:
DIMENSIONS ARE IN MILLIMETERS
TOLERANCES:
ANGULAR: ±--
X.X ±--
X.XX ±--
INTERPRET GEOMETRIC TOLERANCING PER: ASME 14.5M

CAD FILE: 453-00065R

DATE

SHEET 1 OF 1 | Unit: mm

TITLE: Module, BL652, Integrated Antenna, Tape and Reel

SIZE B | DWG. NO. 453-00065R | REV 1-3

THIRD ANGLE PROJECTION
UNLESS OTHERWISE NOTED, THIS DOCUMENT CONTAINS LAIRD EZURIO INFORMATION. REPRODUCTION, USE, DISCLOSURE OR TRANSMITTAL OF ALL OR ANY PART OF THIS DOCUMENT IS PROHIBITED EXCEPT TO THE EXTENT APPROVED IN WRITING BY AN AUTHORIZED REPRESENTATIVE OF EZURIO. EZURIO RESERVES ALL RIGHTS UNDER PATENTS, TRADEMARKS, COPY RIGHTS AND TRADE SECRETS. COPYRIGHT, EZURIO 2024. ALL RIGHTS RESERVED.

Figure 15: BL652 Package Configuration

8.2.2 Module Orientation in Cavity

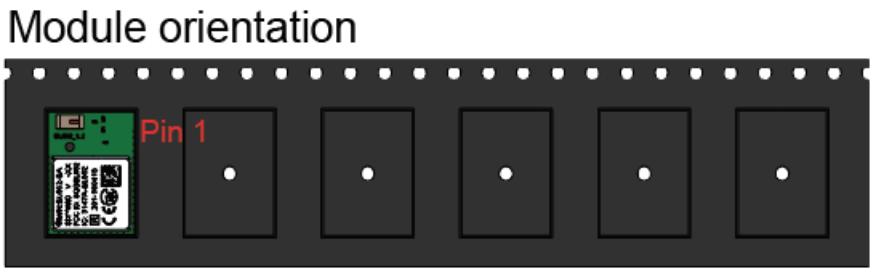

Figure 16: Module Orientation

8.2.3 Labeling

The following labels are located on the reel, anti-static bag, and box.

© Copyright 2025 Ezurio
All Rights Reserved



Figure 17: BL652 Product Identifier Labels for Reel, Bag, and Box (BL652-SA-01-T/R in the exemplary photo)

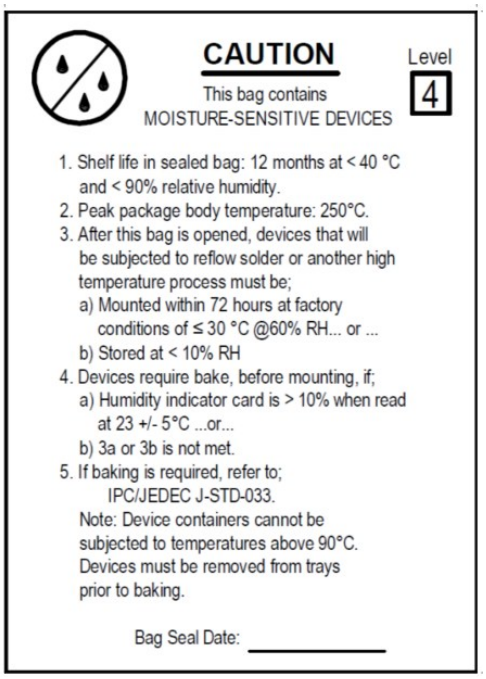

Figure 18: BL652 MSL4 Label.

The following package label is located on both sides of the master carton:

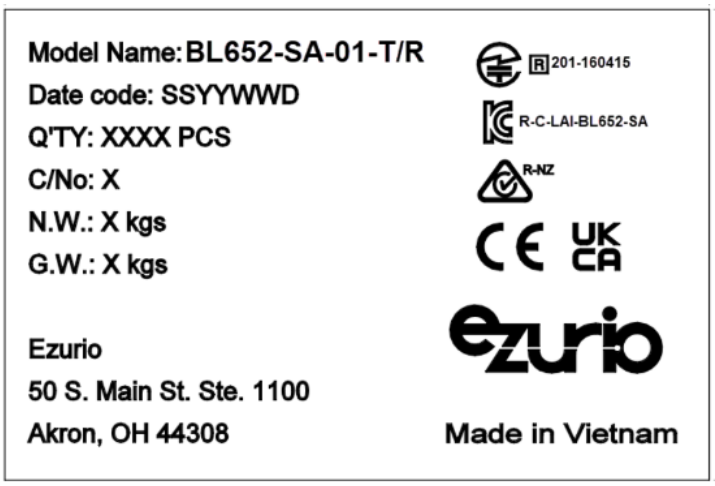

Figure 19: Ezurio Standard Shipping Label for BL652. (BL652-SA-01-T/R in the exemplary photo)

© Copyright 2025 Ezurio
All Rights Reserved

8.3 Reflow Parameters

Prior to any reflow, it is important to ensure the modules were packaged to prevent moisture absorption. New packages contain desiccate (to absorb moisture) and a humidity indicator card to display the level maintained during storage and shipment. If directed to *bake units* on the card, see Table 29 and follow instructions specified by IPC/JEDEC J-STD-033. A copy of this standard is available from the JEDEC website: http://www.jedec.org/sites/default/files/docs/jstd033b01.pdf

Note: The shipping tray cannot be heated above 65°C. If baking is required at the higher temperatures displayed in in Table 29, the modules must be removed from the shipping tray.

Any modules not manufactured before exceeding their floor life should be re-packaged with fresh desiccate and a new humidity indicator card. Floor life for MSL (Moisture Sensitivity Level) four devices is 72 hours in ambient environment ≤30°C/60%RH.

Table 29: Recommended baking times and temperatures

MSL	125°C Baking Temp.		90°C/≤ 5%RH Baking Temp.		40°C/ ≤ 5%RH Baking Temp.	
	Saturated @ 30°C/85%	Floor Life Limit + 72 hours @ 30°C/60%	Saturated @ 30°C/85%	Floor Life Limit + 72 hours @ 30°C/60%	Saturated @ 30°C/85%	Floor Life Limit + 72 hours @ 30°C/60%
4	11 hours	7 hours	37 hours	23 hours	15 days	9 days

Ezurio surface mount modules are designed to be easily manufactured, including reflow soldering to a PCB. Ultimately it is the responsibility of the customer to choose the appropriate solder paste and to ensure oven temperatures during reflow meet the requirements of the solder paste. Ezurio surface mount modules conform to J-STD-020D1 standards for reflow temperatures.

Important: During reflow, modules should not be above 260° and not for more than 30 seconds.

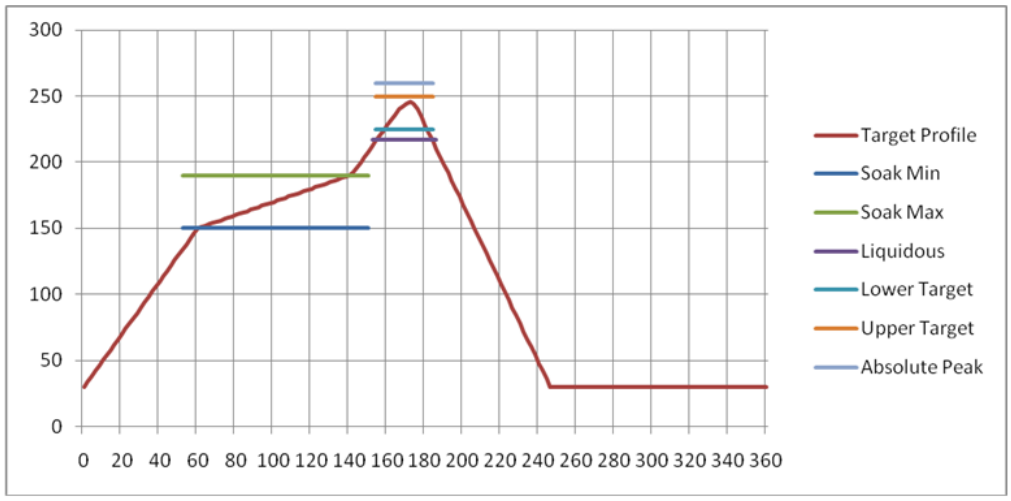

Figure 20: Recommended reflow temperature

Temperatures should not exceed the minimums or maximums presented in Table 30.

Table 30: Recommended maximum and minimum temperatures

Specification	Value	Unit
Temperature Inc./Dec. Rate (max)	1~3	°C / Sec
Temperature Decrease rate (goal)	2-4	°C / Sec
Soak Temp Increase rate (goal)	.5 - 1	°C / Sec
Flux Soak Period (Min)	70	Sec
Flux Soak Period (Max)	120	Sec

© Copyright 2025 Ezurio
All Rights Reserved

Specification	Value	Unit
Flux Soak Temp (Min)	150	°C
Flux Soak Temp (max)	190	°C
Time Above Liquidous (max)	70	Sec
Time Above Liquidous (min)	50	Sec
Time In Target Reflow Range (goal)	30	Sec
Time At Absolute Peak (max)	5	Sec
Liquidous Temperature (SAC305)	218	°C
Lower Target Reflow Temperature	240	°C
Upper Target Reflow Temperature	250	°C
Absolute Peak Temperature	260	°C

© Copyright 2025 Ezurio
All Rights Reserved

9 Regulatory

Note: For complete regulatory information, refer to the BL652 Regulatory Information document which is also available from the BL652 product page.

The BL652 holds current certifications in the following countries:

Country/Region	Regulatory ID
USA (FCC)	SQGBL652
EU	N/A
Canada (ISED)	3147A-BL652
Japan (MIC)	BL652-SA: 201-160415 BL652-SC: 201-160416
Taiwan (NCC)	BL652-SA: CCAF19LP0970T3 BL652-SC: CCAF19LP097AT5
Korea (KC)	BL652-SA: R-C-LAI-BL652-SA

10 Ordering Information

BL652-SA-0x	Intelligent BTv5.0 Module featuring smartBASIC (internal antenna)
BL652-SC-0x	Intelligent BTv5.0 Module featuring smartBASIC (IPEX MHF4 connector)
DVK-BL652-SA / SC-0x	Development Kit for each BL652 series module above

© Copyright 2025 Ezurio
All Rights Reserved

11 Bluetooth SIG Qualification

11.1 Overview

The Bluetooth Qualification Process promotes global product interoperability and reinforces the strength of the Bluetooth® brand and ecosystem to the benefit of all Bluetooth SIG members. The Bluetooth Qualification Process helps member companies ensure their products that incorporate Bluetooth technology comply with the Bluetooth Patent & Copyright License Agreement and the Bluetooth Trademark License Agreement (collectively, the Bluetooth License Agreement) and Bluetooth Specifications.

The Bluetooth Qualification Process is defined by the Qualification Program Reference Document (QPRD) v3.

To demonstrate that a product complies with the Bluetooth Specification(s), each member must for each of its products:

- Identify the product, the design included in the product, the Bluetooth Specifications that the design implements, and the features of each implemented specification
- Complete the Bluetooth Qualification Process by submitting the required documentation for the product under a user account belonging to your company

The Bluetooth Qualification Process consists of the phases shown below:

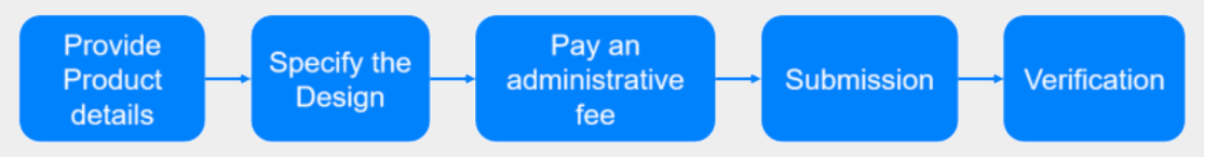

To complete the Qualification Process the company developing a Bluetooth End Product shall be a member of the Bluetooth SIG. To start the application please use the following link: Apply for Adopter Membership

11.2 Scope

This guide is intended to provide guidance on the Bluetooth Qualification Process for End Products that reference a single existing design, that has not been modified, (refer to Section 3.2.1 of the Qualification Program Reference Document v3).

This option applies to a Member qualifying a Product that includes an existing Design that has a DN, QDID, or DID and that Design has not been modified (e.g., rebranding a Qualified Product from another Member). The Design identified by the DN, QDID, or DID may only implement Bluetooth Specifications that are active or deprecated at the time of Submission. No modifications may be made to the Design, including changes to the ICS Form.

Changes to the Product outside the Design are allowed, including:

- Enabling technologies
- Changes to the industrial design
- Changes to the communication technology other than Bluetooth
- Changes to the features that are unrelated to Bluetooth, branding, packaging, colour, shape, Product name, or Model number

Members are responsible for assessing that modifications to the Product outside of the Design do not affect compliance with Bluetooth Specifications or result in a change to the ICS Form.

For the purposes of this document, it is assumed that the member is combining a single unmodified Core-Complete Configuration.

11.3 Qualification Steps When Referencing a single existing design, (unmodified) – Option 1 in the QPRDv3

For this qualification, follow these steps:

1. To start a listing, go to: https://qualification.bluetooth.com/
2. Select **Start the Bluetooth Qualification Process**.
3. Product Details to be entered:
    - Project Name (this can be the product name or the Bluetooth Design name).
    - Product Description
    - Model Number

© Copyright 2025 Ezurio
All Rights Reserved

- Product Publication Date (the product publication date may not be later than 90 days after submission)
- Product Website (optional)
- Internal Visibility (this will define if the product will be visible to other users prior to publication)
- If you have multiple End Products to list then you can select 'Import Multiple Products', firstly downloading and completing the template, then by 'Upload Product List'. This will populate Qualification Workspace with all your products.

4. Specify the Design:
   - Do you include any existing Design(s) in your Product? Answer Yes, I do.
   - Enter the single DN or QDID used in your, (for Option 1 only one DN or QDID can be referenced)
   - Once the DN or QDID is selected it will appear on the left-hand side, indicating the layers covered by the design.
   - Select 'I'm finished entering DN's
   - What do you want to do next? Answer, 'Use this Design without Modification'
   - Save and go to Product Qualification Fee
5. Product Qualification Fee:
   - It's important to make sure a Prepaid Product Qualification fee is available as it is required at this stage to complete the Qualification Process.
   - Prepaid Product Qualification Fee's will appear in the available list so select one for the listing.
   - If one is not available select 'Pay Product Qualification Fee', payment can be done immediately via credit card, or you can pay via Invoice. Payment via credit will release the number immediately, if paying via invoice the number will not be released until the invoice is paid.
   - Once you have selected the Prepaid Qualification Fee, select 'Save and go to Submission'
6. Submission:
   - Some automatic checks occur to ensure all submission requirements are complete.
   - To complete the listing any errors must be corrected
   - Once you have confirmed all design information is correct, tick all of the three check boxes and add your name to the signature page.
   - Now select 'Complete the Submission'.
   - You will be asked a final time to confirm you want to proceed with the submission, select 'Complete the Submission'.
   - Qualification Workspace will confirm the submission has been submitted. The Bluetooth SIG will email confirmation once the submission has been accepted, (normally this takes 1 working day).
7. Download Product and Design Details:
   a. You can now download a copy of the confirmed listing from the design listing page and save a copy in your Compliance Folder

For further information, please refer to the following webpage:

https://www.bluetooth.com/develop-with-bluetooth/qualification-listing/

11.4 Example Designs for reference

The following gives an example of a design possible under option 1:

Ezurio End Product design using Nordic Component based design

Design Name	Owner	Declaration ID	QD ID	Link to listing on the SIG website
BL652	Ezurio	D036437	98795	https://qualification.bluetooth.com/ListingDetails/25082

11.5 Qualify More Products

If you develop further products based on the same design in the future, it is possible to add them free of charge. The new product must not modify the existing design i.e add ICS functionality, otherwise a new design listing will be required.

To add more products to your design, select 'Manage Submitted Products' in the Getting Started page, Actions, Qualify More Products. The tool will take you through the updating process.

© Copyright 2025 Ezurio
All Rights Reserved

12 Additional Information

Please contact your local sales representative or our support team for further assistance:

Headquarters	Ezurio 50 S. Main St. Suite 1100 Akron, OH 44308 USA
Website	http://www.ezurio.com
Technical Support	http://www.ezurio.com/resources/support
Sales Contact	http://www.ezurio.com/contact

Note: Information contained in this document is subject to change.

Ezurio's products are subject to standard Terms & Conditions.

© Copyright 2025 Ezurio All Rights Reserved. Any information furnished by Ezurio and its agents is believed to be accurate but cannot be guaranteed. All specifications are subject to change without notice. Responsibility for the use and application of Ezurio materials or products rests with the end user since Ezurio and its agents cannot be aware of all potential uses. Ezurio makes no warranties as to non-infringement nor as to the fitness, merchantability, or sustainability of any Ezurio materials or products for any specific or general uses. Ezurio or any of its affiliates or agents shall not be liable for incidental or consequential damages of any kind. All Ezurio products are sold pursuant to the Ezurio Terms and Conditions of Sale in effect from time to time, a copy of which will be furnished upon request. Nothing herein provides a license under any Ezurio or any third-party intellectual property right. Ezurio and its associated logos are trademarks owned by Ezurio and/or its affiliates.

© Copyright 2025 Ezurio
All Rights Reserved