TABLE OF CONTENTS

SHEET NO.	SHEET DESCRIPTION
1	GENERAL NOTES
2	CONFIGURATIONS
3	ALL KEY CONFIGURATIONS
4	BLADE CONNECTOR ASSEMBLY
5	8W BOM
6	9W BOM
7	10W BOM

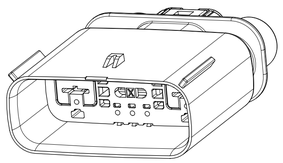

8W HYBRID

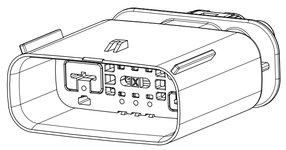

9W HYBRID

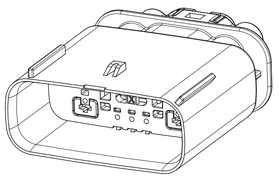

10W HYBRID

NOTES: VALID UNLESS OTHERWISE SPECIFIED

1. GENERAL:
a. APPLICATION SPECIFICATION SEE: 1601110001-AS
-CONTAINS: PRODUCT INTRODUCTION, PRODUCT SUMMARY, CONNECTOR ASSEMBLY, PACKAGING INFORMATION, CONNECTOR MATING, SERVICE INSTRUCTIONS, ELECTRICAL CONTINUITY CHECKING, CRIMPING, AND TROUBLESHOOTING.
-DESIGNED TO MATE WITH CONNECTOR AS SPECIFIED IN THE MATING CONNECTOR DRAWINGS CHART.
-FOR TERMINALS TO BE USED WITH THIS ASSEMBLY SEE MOLEX DRAWING TBD.
-SYSTEM TO BE USED WITH WIRE WITHIN DIAMETER RANGE OF 1.2 mm TO 2.69 mm.
-ASSEMBLY SHIPPED WITH PLR IN PRE-LOCK POSITION (SEE PLR PRE-LOCK VIEW SHEET 5).

b. PRODUCT SPECIFICATION SEE: 1600760001-PS
CONTAINS: PRODUCT INTRODUCTION, PRODUCT SUMMARY, RATINGS (CURRENT, TEMPERATURE, SEALING, AND FLAMMABILITY), AND PRODUCT VALIDATION.
c. PACKAGING SPECIFICATION PER MOLEX DRAWING: SEE PACKAGING CHART
d. PARTS MUST BE IN COMPLIANCE TO MOLEX CHEMICAL SUBSTANCES FOR PRODUCTS AND PACKAGING SPECIFICATION: QEHS-699000-300
e. DATA MUST BE SUBMITTED UNDER THE MOLEX PART NUMBER TO IMDS (COMPANY ID#13255)

2. DESIGN - MATERIALS:
a. SEE BOM TABLE (SHEET 4)

3. DESIGN - GEOMETRY:
a. ALL GRAPHIC DATA IS BASIC (NO TOLERANCE) AND MUST BE TAKEN FROM THE DATA FILE AT ITS LATEST REVISION.
b. GEOMETRIC DIMENSIONS AND TOLERANCES PER ASME Y14.5M-2009
c. EDGES AND UNDIMENSIONED DETAILS PER ISO13715
d. CORNERS SHOWN AS SHARP TO BE R 0.2 MAX.
e. LETTERING SHALL BE 0.15 MAX RAISED IN 0.25 MAX RECESS PAD. THIS INCLUDES RECYCLING CODE, CAVITY ID, VENDOR IDENTIFICATION, AND CUSTOMER MATERIAL NUMBER.
f. VISUAL DEFECTS SHALL MEET COSMETIC STANDARD PS-45499-002 (Class B).
g. LASER MARKING:
1. PART NUMBER
2. DAY OF THE YEAR
3. SHIFT
4. YEAR
FOR ADDITIONAL INFORMATION REFERENCE SECTION 5 UNDER PROCEDURES IN ES-34735-008.
h. PRODUCT DESIGN MODEL NUMBER: SEE BOM TABLE

PACKAGING

DESCRIPTION	DRAWING NO.
10 WAY HYBRID (1.5/2.8)	PK-31300-635
8 WAY HYBRID (1.5/6.3)	
9 WAY HYBRID (1.5/2.8/6.3)	

MATING CONNECTOR DRAWINGS

DESCRIPTION	MOLEX INLINE
10 WAY HYBRID (1.5/2.8)	SD-160076-0001
8 WAY HYBRID (1.5/6.3)	
9 WAY HYBRID (1.5/2.8/6.3)	

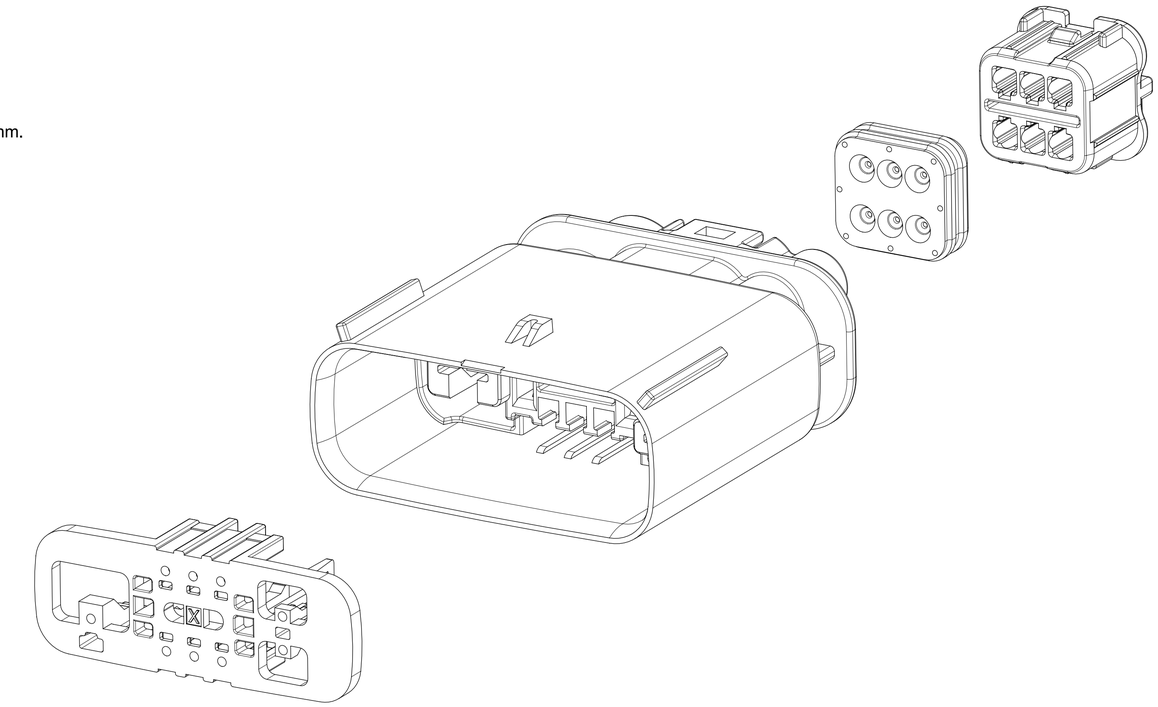

Rev	REV DISCRIPTION
A3	UPDATED STATUS
A2	UPDATED DIMS 3,4,5
A1	UPDATED DIM 5 TOLERANCE
A	RELEASE FOR PRODUCTION
5	UPDATED DESIGN
4	MIGRATED DRAWING TO NX
3	UPDATED DESIGN
2	UPDATED VIEWS
1	INITIAL RELEASE

INSPECTION NUMBER LOG
LAST NUMBER: 5
ADDED:
REMOVED:

THIS DRAWING CONTAINS INFORMATION THAT IS PROPRIETARY TO MOLEX ELECTRONIC TECHNOLOGIES, LLC AND SHOULD NOT BE USED WITHOUT WRITTEN PERMISSION

FUNCTIONAL SYMBOLS: FA = 0, FC = 0, FD = 0
DIVISIONAL SYMBOLS

DIMENSION UNITS	SCALE
mm	1.5:1

GENERAL TOLERANCES (UNLESS SPECIFIED)

ANGULAR TOL	± 0.5°
4 PLACES	±
3 PLACES	±
2 PLACES	±
1 PLACE	±
0 PLACES	±

DRAFT WHERE APPLICABLE MUST REMAIN WITHIN DIMENSIONS

CURRENT REV DESC: Changed the document restriction to General Market.

STATUS: Production
DRWN: Mahesh KP 2023-03-21
CHK'D: Ryan Dunn 2023-03-21
APPR: Ryan Dunn 2023-03-21

THIRD ANGLE PROJECTION

molex

MX150 HYBRID BLADE DUAL ROW SEALED ASSY
DUAL ROW SEALED ASSEMBLY MAT SEAL

PRODUCT SALES DRAWING

DOCUMENT NUMBER	DOC TYPE	DOC PART	REVISION
1600770001	PSD	000	A5

DRAWING	SERIES	MATERIAL NUMBER	CUSTOMER	SHEET NUMBER
A1-SIZE	160077		GENERAL MARKET	1 OF 7

FORMAT: TLibrary/A1
SIZE: ANSI B
DATE: 2020/Mar/1

SHEET DESCRIPTION
CONFIGURATIONS

	8W HYBRID	9W HYBRID	10W HYBRID
STANDARD	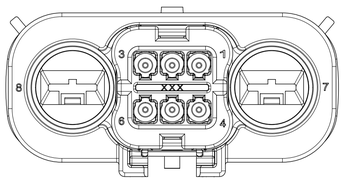	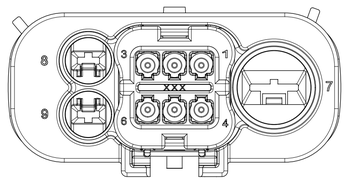	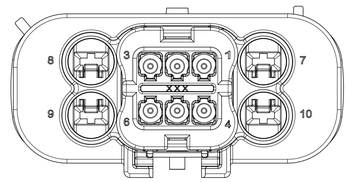
WITH BLOCKED CAVITIES	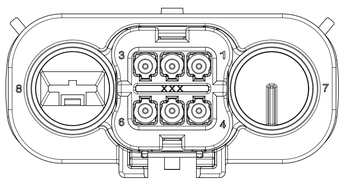	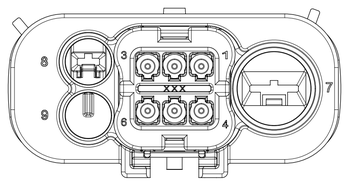	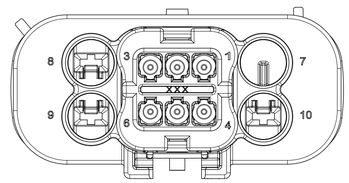

THIS DRAWING CONTAINS INFORMATION THAT IS PROPRIETARY TO MOLEX ELECTRONIC TECHNOLOGIES, LLC AND SHOULD NOT BE USED WITHOUT WRITTEN PERMISSION

FUNCTIONAL SYMBOLS
F A = 0
F C = 0
F P = 0

DIVISIONAL SYMBOLS

DIMENSION UNITS	SCALE
mm	2.5:1

GENERAL TOLERANCES (UNLESS SPECIFIED)	
ANGULAR TOL	± 0.5°
4 PLACES	±
3 PLACES	±
2 PLACES	±
1 PLACE	±
0 PLACES	±

DRAFT WHERE APPLICABLE MUST REMAIN WITHIN DIMENSIONS

CURRENT REV DESC: Changed the document restriction to General Market.

STATUS: Production
DRWN: Mahesh KP 2023-03-21
CHK'D: Ryan Dunn 2023-03-21
APPR: Ryan Dunn 2023-03-21

THIRD ANGLE PROJECTION | DRAWING: A1-SIZE | SERIES: 160077

molex

MX150 HYBRID BLADE DUAL ROW SEALED ASSY
DUAL ROW SEALED ASSEMBLY MAT SEAL

PRODUCT SALES DRAWING

DOCUMENT NUMBER	DOC TYPE	DOC PART	REVISION
1600770001	PSD	000	A5

MATERIAL NUMBER	CUSTOMER	SHEET NUMBER
	GENERAL MARKET	2 OF 7

SHEET DESCRIPTION
ALL KEY CONFIGURATIONS

	8W HYBRID	9W HYBRID	10W HYBRID
KEY A	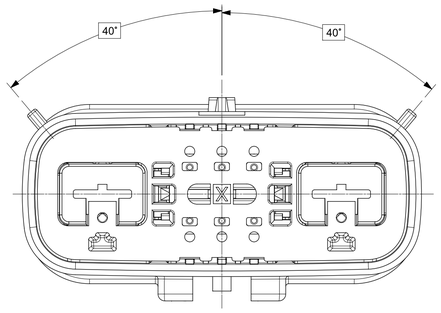	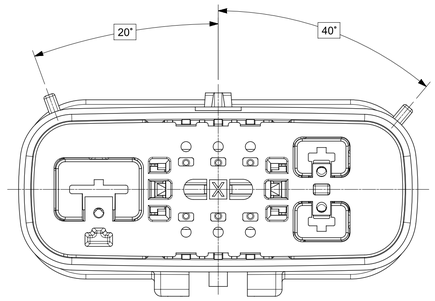	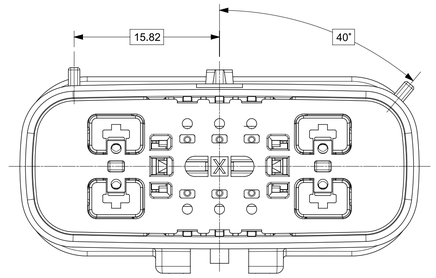
KEY B	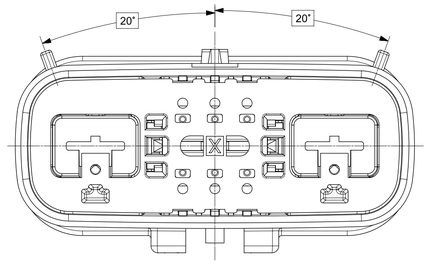	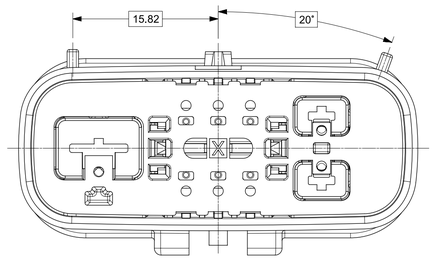	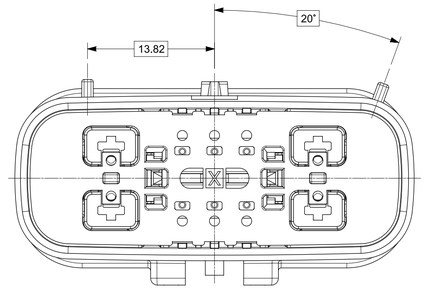
KEY C	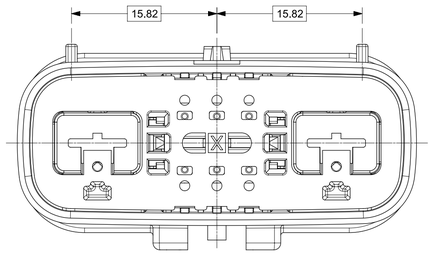	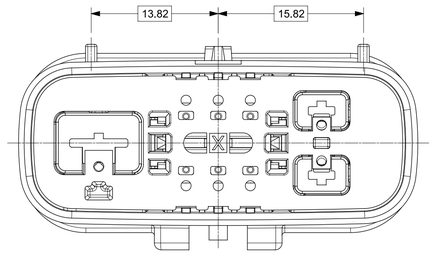	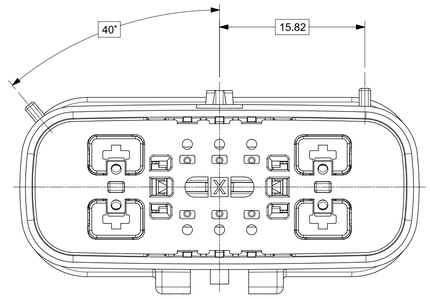
KEY D	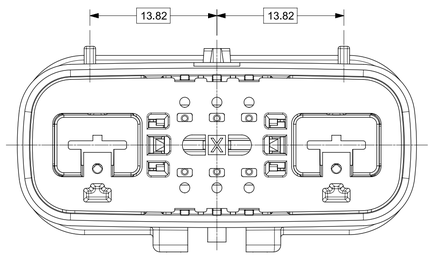	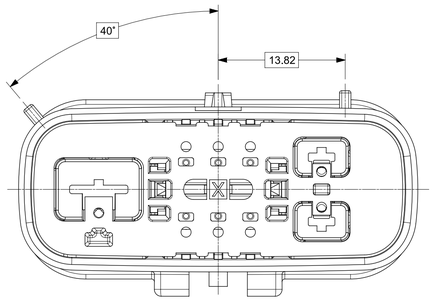	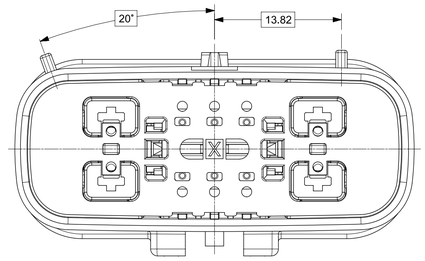

THIS DRAWING CONTAINS INFORMATION THAT IS PROPRIETARY TO MOLEX ELECTRONIC TECHNOLOGIES, LLC AND SHOULD NOT BE USED WITHOUT WRITTEN PERMISSION

FUNCTIONAL SYMBOLS
F A = 0
F C = 0
F P = 0
DIVISIONAL SYMBOLS

DIMENSION UNITS	SCALE
mm	3:1

GENERAL TOLERANCES (UNLESS SPECIFIED)

ANGULAR TOL	± 0.5°
4 PLACES	±
3 PLACES	±
2 PLACES	±
1 PLACE	±
0 PLACES	±

DRAFT WHERE APPLICABLE MUST REMAIN WITHIN DIMENSIONS

CURRENT REV DESC: Changed the document restriction to General Market.

STATUS: Production
DRWN: Mahesh KP 2023-03-21
CHK'D: Ryan Dunn 2023-03-21
APPR: Ryan Dunn 2023-03-21

THIRD ANGLE PROJECTION

DRAWING	SERIES
A1-SIZE	160077

molex

MX150 HYBRID BLADE DUAL ROW SEALED ASSY
DUAL ROW SEALED ASSEMBLY MAT SEAL

PRODUCT SALES DRAWING

DOCUMENT NUMBER	DOC TYPE	DOC PART	REVISION
1600770001	PSD	000	A5

MATERIAL NUMBER	CUSTOMER	SHEET NUMBER
	GENERAL MARKET	3 OF 7

FORMAT: TLdesignA1
REV: 2020-06-01
DATE: 2020/Mar/1

SHEET DESCRIPTION
BLADE CONNECTOR ASSEMBLY

CHARTED DIMENSIONS							
DESCRIPTION	DIMENSIONS						
	A	B	C	D	E	F	G
8 WAY HYBRID (1.5/6.3)	13.00	N/A	46.33	7	8	N/A	N/A
9 WAY HYBRID (1.5/2.8/6.3)	13.00	11.25	46.33	7	8	9	N/A
10 WAY HYBRID (1.5/2.8)	N/A	11.25	46.33	7	8	9	10

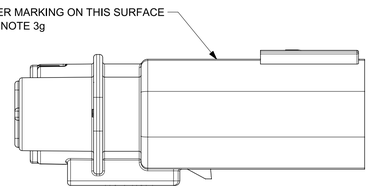

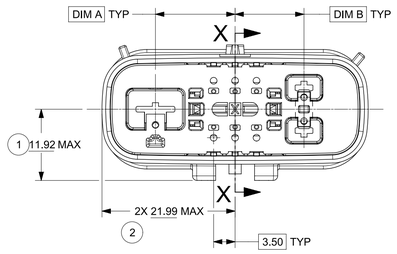

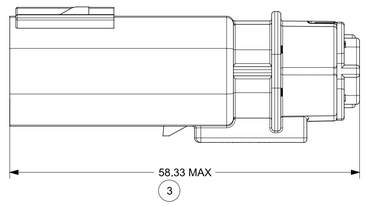

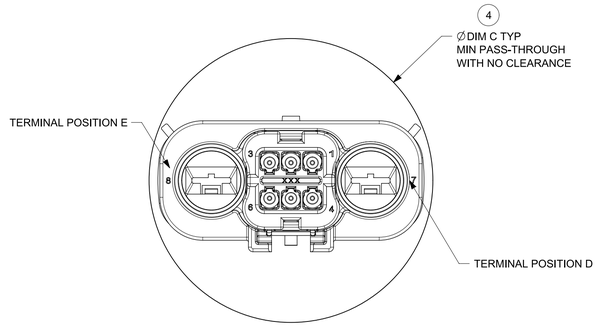

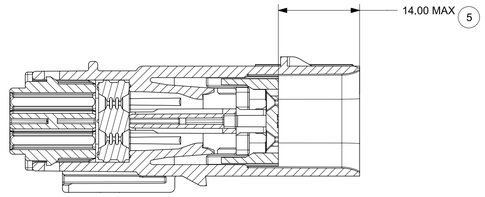

PRIMARY LOCK REINFORCEMENT (PLR)
SHOWN IN PRE - STAGE POSITION

SECTION Y-Y

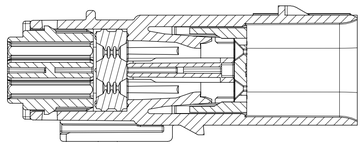

PRIMARY LOCK REINFORCEMENT (PLR)
SHOWN IN FINAL - STAGE POSITION

SECTION X-X

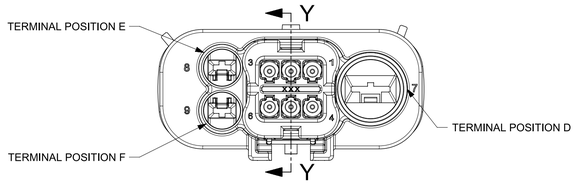

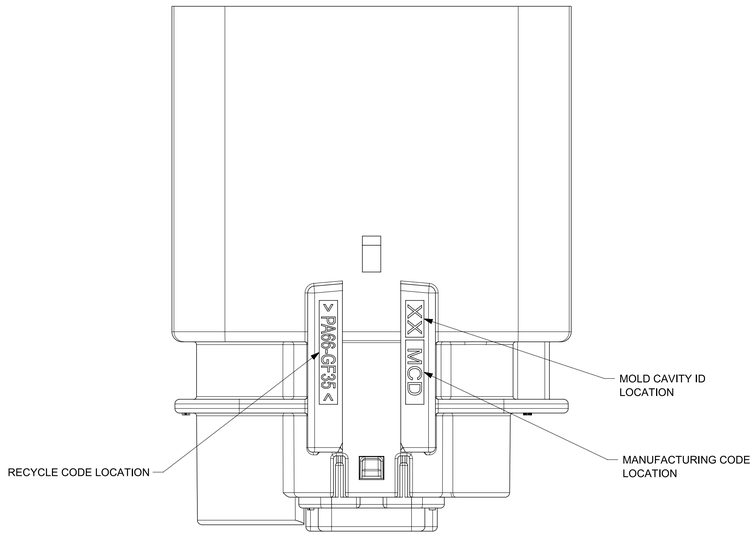

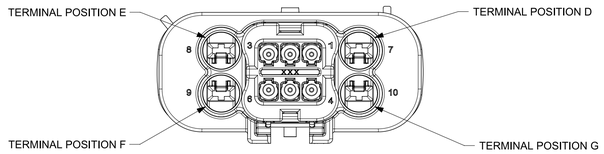

FUNCTIONAL SYMBOLS			
FA = 0	DIMENSION UNITS: mm	SCALE: 1:1	
FC = 0	GENERAL TOLERANCES (UNLESS SPECIFIED)		
FD = 0	ANGULAR TOL ± 0.5°		
	4 PLACES ±		
DIVISIONAL SYMBOLS	3 PLACES ±		
	2 PLACES ±		
	1 PLACE ±		
	0 PLACES ±		
	DRAFT WHERE APPLICABLE MUST REMAIN WITHIN DIMENSIONS		

THIS DRAWING CONTAINS INFORMATION THAT IS PROPRIETARY TO MOLEX ELECTRONIC TECHNOLOGIES, LLC AND SHOULD NOT BE USED WITHOUT WRITTEN PERMISSION

CURRENT REV DESC: Changed the document restriction to General Market.

STATUS: Production
DRWN: Mahesh KP 2023-03-21
CHK'D: Ryan Dunn 2023-03-21
APPR: Ryan Dunn 2023-03-21

THIRD ANGLE PROJECTION | DRAWING: A1-SIZE | SERIES: 160077

molex

MX150 HYBRID BLADE DUAL ROW SEALED ASSY
DUAL ROW SEALED ASSEMBLY MAT SEAL

PRODUCT SALES DRAWING

DOCUMENT NUMBER	DOC TYPE	DOC PART	REVISION
1600770001	PSD	000	A5

MATERIAL NUMBER	CUSTOMER	SHEET NUMBER
	GENERAL MARKET	4 OF 7

FORMAT: TD-Imperial-A
REVISION: B
DATE: 2022/04/01

SHEET DESCRIPTION
8W BILL OF MATERIALS

MX150 8W HYBRID BLADE

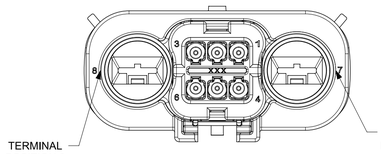

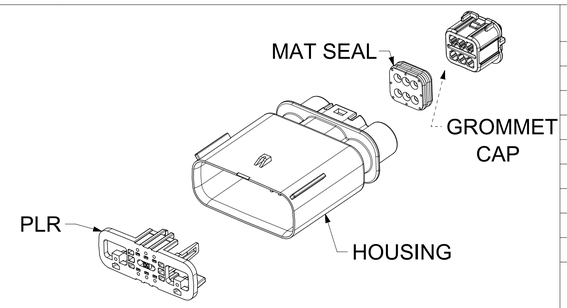

ABBREVATION	DESCRIPTION	COLOR	MATERIAL
A-BLK	HOUSING KEYING OPTION A	BLACK	DSM PA66 GF35
B-LG	HOUSING KEYING OPTION B	LIGHT GRAY	DSM PA66 GF35
C-DG	HOUSING KEYING OPTION C	DARK GRAY	DSM PA66 GF35
D-SG	HOUSING KEYING OPTION D	STONE GRAY	DSM PA66 GF35
A-BLK	HOUSING KEYING OPTION A - BLOCKED	BLACK	DSM PA66 GF35
GCP	GROMMET CAP (PLUGGED)	BLACK	DSM PA66 GF35
GCO	GROMMET CAP (OPEN)	BLACK	DSM PA66 GF35
PLR	PLR	NATURAL	DSM PA66 GF35
M	MAT SEAL	RUST RED	INHERENTLY LUBRICATED SILICONE

ASSEMBLY DESCRIPTION	ASSEMBLY PART NUMBER	COMPONENT THE PRESENCE OF AN ABBREVIATION INDICATES THE PRESENCE OF THAT COMPONENT.				BLOCKED TERMINALS CAVITY WITH A NUMBER INDICATES BLOCKED TERMINAL POSITION CAVITY WITHOUT A NUMBER INDICATES OPEN TERMINAL POSITION								STATUS	COMMENTS	OPTIONAL ATTATCHMENTS SOLD SEPERATELY	
		HOUSING KEY/COLOR	GROMMET CAP	PLR	MAT SEAL	1	2	3	4	5	6	7	8			BACKSHELL WITH RIBS	BACKSHELL WITHOUT RIBS
KEY A, BLACK	160079-3001	A-BLK	GCP	PLR	M									SALEABLE		TBD	TBD
KEY B, LIGHT GRAY	160079-3002	B-LG	GCP	PLR	M									SALEABLE		TBD	TBD
KEY C, DARK GRAY	160079-3003	C-DG	GCP	PLR	M									SALEABLE		TBD	TBD
KEY D, STONE GRAY	160079-3004	D-SG	GCP	PLR	M									SALEABLE		TBD	TBD
KEY A BLOCKED, BLACK	160079-3005	A-BLK	GCP	PLR	M							7		SALEABLE		TBD	TBD

THIS DRAWING CONTAINS INFORMATION THAT IS PROPRIETARY TO MOLEX ELECTRONIC TECHNOLOGIES, LLC AND SHOULD NOT BE USED WITHOUT WRITTEN PERMISSION

FUNCTIONAL SYMBOLS
FA = 0
FC = 0
FP = 0
DIVISIONAL SYMBOLS

DIMENSION UNITS	SCALE
mm	1:1

GENERAL TOLERANCES (UNLESS SPECIFIED)

ANGULAR TOL	±	0.5°
4 PLACES	±	
3 PLACES	±	
2 PLACES	±	
1 PLACE	±	
0 PLACES	±	

DRAFT WHERE APPLICABLE MUST REMAIN WITHIN DIMENSIONS

CURRENT REV DESC: Changed the document restriction to General Market.

STATUS: Production
DRWN: Mahesh KP 2023-03-21
CHK'D: Ryan Dunn 2023-03-21
APPR: Ryan Dunn 2023-03-21

THIRD ANGLE PROJECTION

DRAWING	SERIES
A1-SIZE	160077

molex

MX150 HYBRID BLADE DUAL ROW SEALED ASSY
DUAL ROW SEALED ASSEMBLY MAT SEAL

PRODUCT SALES DRAWING

DOCUMENT NUMBER	DOC TYPE	DOC PART	REVISION
1600770001	PSD	000	A5

MATERIAL NUMBER	CUSTOMER	SHEET NUMBER
	GENERAL MARKET	5 OF 7

FORMAT: 11-Engineer A1
REVISION: B
DATE: 2022/04/01

SHEET DESCRIPTION
9W BILL OF MATERIALS

MX150 9W HYBRID BLADE

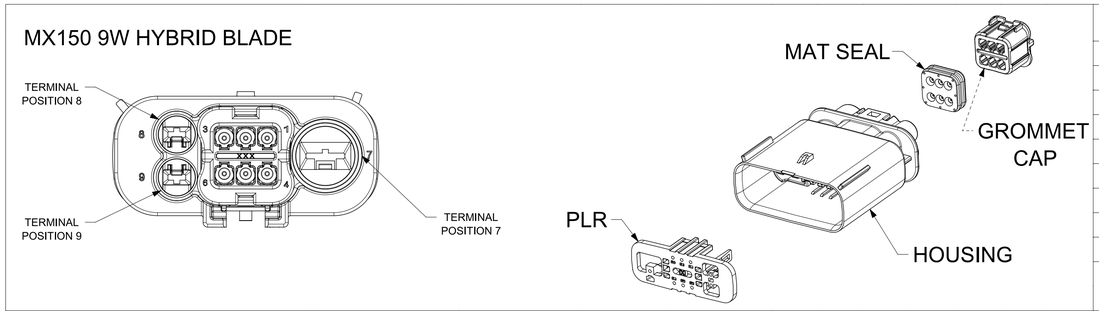

ABBREVIATION	DESCRIPTION	COLOR	MATERIAL
A-BLK	HOUSING KEYING OPTION A	BLACK	DSM PA66 GF35
B-LG	HOUSING KEYING OPTION B	LIGHT GRAY	DSM PA66 GF35
C-DG	HOUSING KEYING OPTION C	DARK GRAY	DSM PA66 GF35
D-SG	HOUSING KEYING OPTION D	STONE GRAY	DSM PA66 GF35
A-BLK	HOUSING KEYING OPTION A - BLOCKED	BLACK	DSM PA66 GF35
GCP	GROMMET CAP (PLUGGED)	BLACK	DSM PA66 GF35
GCO	GROMMET CAP (OPEN)	BLACK	DSM PA66 GF35
PLR	PLR	NATURAL	DSM PA66 GF35
M	MAT SEAL	RUST RED	INHERENTLY LUBRICATED SILICONE

ASSEMBLY DESCRIPTION	ASSEMBLY PART NUMBER	COMPONENT				BLOCKED TERMINALS									STATUS	COMMENTS	OPTIONAL ATTATCHMENTS SOLD SEPERATELY	
		THE PRESENCE OF AN ABBREVIATION INDICATES THE PRESENCE OF THAT COMPONENT.				CAVITY WITH A NUMBER INDICATES BLOCKED TERMINAL POSITION CAVITY WITHOUT A NUMBER INDICATES OPEN TERMINAL POSITION												
		HOUSING KEY/COLOR	GROMMET CAP	PLR	MAT SEAL	1	2	3	4	5	6	7	8	9			BACKSHELL WITH RIBS	BACKSHELL WITHOUT RIBS
KEY A, BLACK	160081-3001	A-BLK	GCP	PLR	M										SALEABLE		TBD	TBD
KEY B, LIGHT GRAY	160081-3002	B-LG	GCP	PLR	M										SALEABLE		TBD	TBD
KEY C, DARK GRAY	160081-3003	C-DG	GCP	PLR	M										SALEABLE		TBD	TBD
KEY D, STONE GRAY	160081-3004	D-SG	GCP	PLR	M										SALEABLE		TBD	TBD
KEY A BLOCKED, BLACK	160081-3005	A-BLK	GCP	PLR	M									9	SALEABLE		TBD	TBD

THIS DRAWING CONTAINS INFORMATION THAT IS PROPRIETARY TO MOLEX ELECTRONIC TECHNOLOGIES, LLC AND SHOULD NOT BE USED WITHOUT WRITTEN PERMISSION

FUNCTIONAL SYMBOLS
FA = 0
FC = 0
FP = 0
DIVISIONAL SYMBOLS

DIMENSION UNITS	SCALE
mm	1:1

GENERAL TOLERANCES (UNLESS SPECIFIED)

ANGULAR TOL	±	0.5°
4 PLACES	±	
3 PLACES	±	
2 PLACES	±	
1 PLACE	±	
0 PLACES	±	

DRAFT WHERE APPLICABLE MUST REMAIN WITHIN DIMENSIONS

CURRENT REV DESC: Changed the document restriction to General Market.

STATUS: Production
DRWN: Mahesh KP 2023-03-21
CHK'D: Ryan Dunn 2023-03-21
APPR: Ryan Dunn 2023-03-21

THIRD ANGLE PROJECTION

DRAWING	SERIES
A1-SIZE	160077

molex

MX150 HYBRID BLADE DUAL ROW SEALED ASSY
DUAL ROW SEALED ASSEMBLY MAT SEAL

PRODUCT SALES DRAWING

DOCUMENT NUMBER	DOC TYPE	DOC PART	REVISION
1600770001	PSD	000	A5

MATERIAL NUMBER	CUSTOMER	SHEET NUMBER
	GENERAL MARKET	6 OF 7

FORMAT: 11-Engineer A1
REVISION: B
DATE: 2022/04/01

SHEET DESCRIPTION
10W BILL OF MATERIALS

MX150 10W HYBRID BLADE

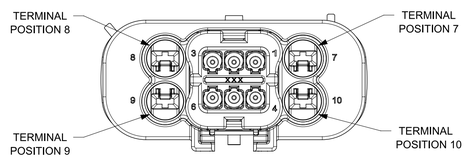

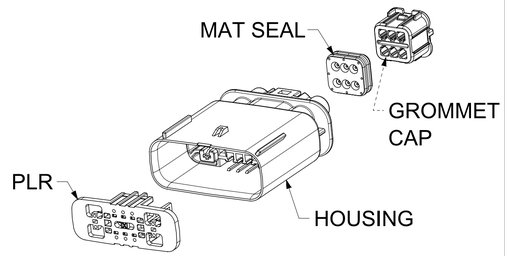

ABBREVIATION	DESCRIPTION	COLOR	MATERIAL
A-BLK	HOUSING KEYING OPTION A	BLACK	DSM PA66 GF35
B-LG	HOUSING KEYING OPTION B	LIGHT GRAY	DSM PA66 GF35
C-DG	HOUSING KEYING OPTION C	DARK GRAY	DSM PA66 GF35
D-SG	HOUSING KEYING OPTION D	STONE GRAY	DSM PA66 GF35
A-BLK	HOUSING KEYING OPTION A - BLOCKED	BLACK	DSM PA66 GF35
GCP	GROMMET CAP (PLUGGED)	BLACK	DSM PA66 GF35
GCO	GROMMET CAP (OPEN)	BLACK	DSM PA66 GF35
PLR	PLR	NATURAL	DSM PA66 GF35
M	MAT SEAL	RUST RED	INHERENTLY LUBRICATED SILICONE

ASSEMBLY DESCRIPTION	ASSEMBLY PART NUMBER	COMPONENT THE PRESENCE OF AN ABBREVIATION INDICATES THE PRESENCE OF THAT COMPONENT.				BLOCKED TERMINALS CAVITY WITH A NUMBER INDICATES BLOCKED TERMINAL POSITION CAVITY WITHOUT A NUMBER INDICATES OPEN TERMINAL POSITION										STATUS	COMMENTS	OPTIONAL ATTATCHMENTS SOLD SEPERATELY	
		HOUSING KEY/COLOR	GROMMET CAP	PLR	MAT SEAL	1	2	3	4	5	6	7	8	9	10			BACKSHELL WITH RIBS	BACKSHELL WITHOUT RIBS
KEY A, BLACK	160077-5001	A-BLK	GCP	PLR	M											SALEABLE		TBD	TBD
KEY B, LIGHT GRAY	160077-5002	B-LG	GCP	PLR	M											SALEABLE		TBD	TBD
KEY C, DARK GRAY	160077-5003	C-DG	GCP	PLR	M											SALEABLE		TBD	TBD
KEY D, STONE GRAY	160077-5004	D-SG	GCP	PLR	M											SALEABLE		TBD	TBD
KEY A BLOCKED, BLACK	160077-5005	A-BLK	GCP	PLR	M							7				SALEABLE		TBD	TBD
KEY A BLOCKED, BLACK	160077-5006	A-BLK	GCP	PLR	M									9	10	SALEABLE		TBD	TBD
KEY A BLOCKED, BLACK	160077-5007	A-BLK	GCP	PLR	M							7	8	9		SALEABLE		TBD	TBD
KEY A BLOCKED, BLACK	160077-5008	A-BLK	GCP	PLR	M							7	8		10	SALEABLE		TBD	TBD
KEY A, BLACK	160077-5009	A-BLK	GCP	PLR	M	1		3		5						SALEABLE		TBD	TBD
KEY A, BLACK	160077-5010	A-BLK	GCP	PLR	M		2		4		6					SALEABLE		TBD	TBD

THIS DRAWING CONTAINS INFORMATION THAT IS PROPRIETARY TO MOLEX ELECTRONIC TECHNOLOGIES, LLC AND SHOULD NOT BE USED WITHOUT WRITTEN PERMISSION

FUNCTIONAL SYMBOLS
FA = 0
FC = 0
FP = 0
DIVISIONAL SYMBOLS

DIMENSION UNITS	SCALE
mm	1:1

GENERAL TOLERANCES (UNLESS SPECIFIED)

ANGULAR TOL	± 0.5°
4 PLACES	±
3 PLACES	±
2 PLACES	±
1 PLACE	±
0 PLACES	±

DRAFT WHERE APPLICABLE MUST REMAIN WITHIN DIMENSIONS

CURRENT REV DESC: Changed the document restriction to General Market.

STATUS: Production
DRWN: Mahesh KP 2023-03-21
CHK'D: Ryan Dunn 2023-03-21
APPR: Ryan Dunn 2023-03-21

THIRD ANGLE PROJECTION

DRAWING	SERIES
A1-SIZE	160077

molex

MX150 HYBRID BLADE DUAL ROW SEALED ASSY
DUAL ROW SEALED ASSEMBLY MAT SEAL

PRODUCT SALES DRAWING

DOCUMENT NUMBER	DOC TYPE	DOC PART	REVISION
1600770001	PSD	000	A5

MATERIAL NUMBER	CUSTOMER	SHEET NUMBER
	GENERAL MARKET	7 OF 7

FORMAT: 11-Engineer A1
REVISION: B
DATE: 2022/04/01