REVISIONS					
REV	ECO	DESCRIPTION	DATE	BY	APPR
A1	--	FIRST RELEASED	NOV-23-2021	BLINK	TOMMY
A2	--	ADD IP68	APR-26-2023	JUN	TOMMY
A3	--	UPDATED SUITABLE CONTACT NOTE	MAY-16-2023	RO	RO

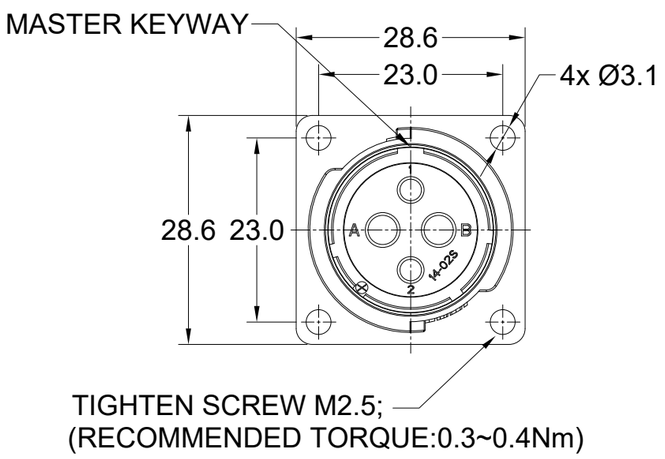

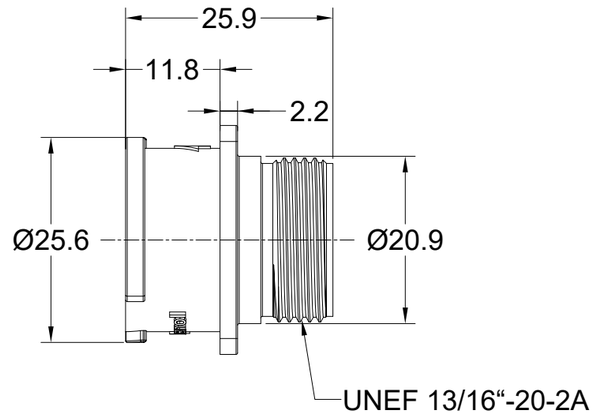

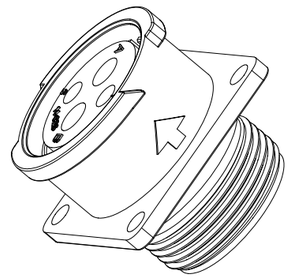

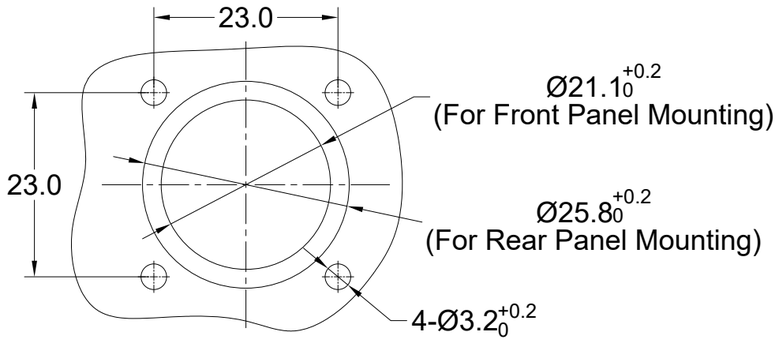

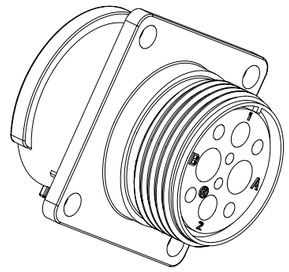

NOTES: (UNLESS OTHERWISE SPECIFIED)

1. MATERIAL:
   SHELL: THERMOPLASTIC, BLACK, UL94 V-0.
   INSERT: THERMOPLASTIC, BLACK, UL94 V-0.
2. SPECIFICATIONS:
   2.1 RATED CURRENT: SEE TABLE 2.
   2.2 RATED VOLTAGE: SEE TABLE 2.
   2.3 OPERATING TEMPERATURE: -40°C~125°C.
   2.4 DIELECTRIC WITHSTANDING VOLTAGE: SEE TABLE1.
   2.5 INSULATION RESISTANCE: 5000 MEGOHMS MIN.
   2.6 IP--CLASS: IP67,IP68 AND IP69K IN MATED CONDITION.
   2.7 MATING CYCLES DURABILITY: 500 CYCLES MIN.
   2.8 RoHS COMPLIANT.
3. SUITABLE CONTACTS : SEE TABLE 2.
4. ALL DIMENSIONS ARE FOR REFERENCE USE ONLY.

RECOMMENDED PANEL
MOUNTING HOLE

RECOMMENDED PANEL
THICKNESS 5.0MM MAX

QUANTITY	PART NUMBER	DESCRIPTION	ITEM

MATERIALS LIST

UNLESS OTHERWISE SPECIFIED
1) All dimensions are in metric(mm).
2) Tolerances are as follows:
1 PL DEC ±0.30
2 PL DEC ±0.15
3 PL DEC ±0.08
Fractions ±1/64
Angles ±1°
3) Note reference = X

MATERIAL SPECIFICATIONS:

PROCESS SPECIFICATIONS:

NEXT ASS'Y:

SIGNATURES		DATE
DRAWN:	JUN	APR-26-2023
CHECKED:	JOE	APR-28-2023
ENGINEER:		
APPROVAL:	TOMMY	MAY-02-2023
CUSTOMER:		

THIS DRAWING IS SUPPLIED FOR INFORMATION ONLY. DESIGN FEATURES, SPECIFICATIONS AND PERFORMANCE DATA SHOWN HEREON ARE THE PROPERTY OF THE AMPHENOL CORPORATION. NO RIGHTS OF REPRODUCTION ARE IMPLIED. ALL DIMENSIONS ARE SUBJECT TO NORMAL MANUFACTURING VARIATIONS.

Amphenol

Sine Systems - www.amphenol-sine.com
44724 Morley Drive
Clinton Township, MI 48036

EcoMate Aquarius,RECEPTACLE, SQUARE FLANGE,
xx POSITION, FEMALE,SHELL SIZE 14

SIZE	TYPE	DWG NO:	REVISION
B	C-	FLS014xxxS03	A2

SCALE: NONE SHEET 1 OF 5

TITLE: EcoMate Aquarius RECEPTACLE, SQUARE FLANGE, xx POSITION, FEMALE,SHELL SIZE 14
DWG NO: FLS014xxxS03
REV: A2
SH: 1
OF: 3

REVISIONS					
REV	ECO	DESCRIPTION	DATE	BY	APPR
A1	--	FIRST RELEASED	NOV-23-2021	BLINK	TOMMY
A2	--	ADD IP68	APR-26-2023	JUN	TOMMY
A3	--	UPDATED SUITABLE CONTACT NOTE	MAY-16-2023	RO	RO

ORDERING INFORMATION：

FLS014xxxS03

PROTECTION KEY:(SEE TABLE 1)：
- N KEY(STANADRD VERSION)
- W KEY
- X KEY
- Y KEY
- Z KEY

STANDS FOR INSERT ARRANGEMENT：
- 2 - 4(2+2) CORES.
- 3 - 3 CORES.
- 4 - 4 CORES.
- 7 - 7 CORES.
- 8 - 8 CORES.
- 12 - 12 CORES.
- 19 - 19 CORES.

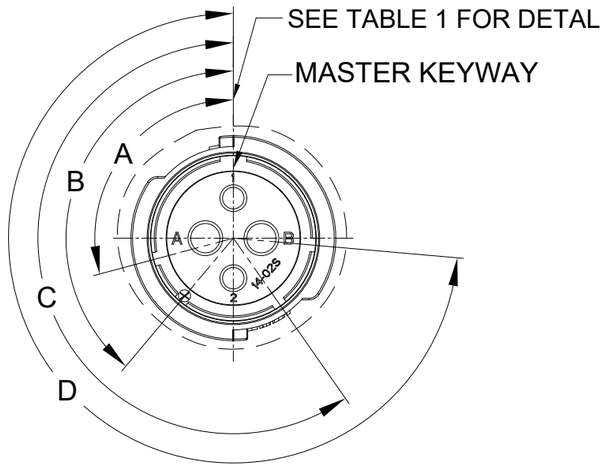

TABLE 1:

KEY POS	A	B	C	D
N	105°	140°	215°	265°
W	60°	140°	215°	265°
X	105°	160°	215°	265°
Y	105°	140°	225°	265°
Z	105°	140°	215°	295°

QUANTITY	PART NUMBER	DESCRIPTION	ITEM

MATERIALS LIST

UNLESS OTHERWISE SPECIFIED
1) All dimensions are in metric(mm).
2) Tolerances are as follows:
1 PL DEC ±0.30 | Fractions ±1/64
2 PL DEC ±0.15 | Angles ±1°
3 PL DEC ±0.08
3) Note reference = X

MATERIAL SPECIFICATIONS:

PROCESS SPECIFICATIONS:

NEXT ASS'Y:

SIGNATURES		DATE
DRAWN:	JUN	APR-26-2023
CHECKED:	JOE	APR-28-2023
ENGINEER:		
APPROVAL:	TOMMY	MAY-02-2023
CUSTOMER:		

THIS DRAWING IS SUPPLIED FOR INFORMATION ONLY. DESIGN FEATURES, SPECIFICATIONS AND PERFORMANCE DATA SHOWN HEREON ARE THE PROPERTY OF THE AMPHENOL CORPORATION. NO RIGHTS OF REPRODUCTION ARE IMPLIED. ALL DIMENSIONS ARE SUBJECT TO NORMAL MANUFACTURING VARIATIONS.

Amphenol
Sine Systems - www.amphenol-sine.com
44724 Morley Drive
Clinton Township, MI 48036

EcoMate Aquarius,RECEPTACLE, SQUARE FLANGE,
xx POSITION, FEMALE,SHELL SIZE 14

SIZE	TYPE	DWG NO:	REVISION
B	C-	FLS014xxxS03	A2

SCALE: NONE | SHEET 2 OF 5

TITLE: EcoMate Aquarius RECEPTACLE, SQUARE FLANGE, xx POSITION, FEMALE,SHELL SIZE 14
DWG NO: FLS014xxxS03
REV: A2
SH: 2
OF: 3

REVISIONS					
REV	ECO	DESCRIPTION	DATE	BY	APPR
A1	--	FIRST RELEASED	NOV-23-2021	BLINK	TOMMY
A2	--	ADD IP68	APR-26-2023	JUN	TOMMY
A3	--	UPDATED SUITABLE CONTACT NOTE	MAY-16-2023	RO	RO

TABLE 2:

PART NUMBER	FLS014x3S03	FLS014x4S03	FLS014x2S03	FLS014x7S03	FLS014x8S03
FEMALE INSERT ARRANGEMENT FRONT VIEW	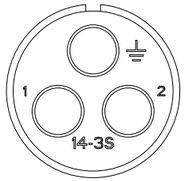	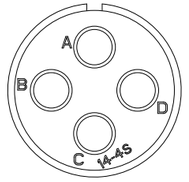	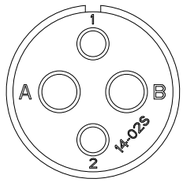	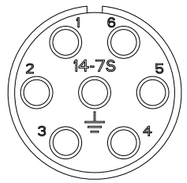	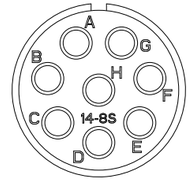
SUITABLE CONTACTS	3 x Size 8 (3.6mm²)	4 x Size 12 (2.5mm²)	2 x Size 16 (1.5mm²) 2 x Size 12 (2.5mm²)	7 x Size 16 (1.5mm²)	8 x Size 16 (1.5mm²)
RATED CURRENT	45A	25A-MACHINED CONT. 23A-STAMPED CONT.	(2.5mm) 25A-MACHINED CONT. (2.5mm) 23A-STAMPED CONT. (16#)13A	13A	13A
RATED VOLTAGE	600V AC/DC	500V AC/DC	500V AC/DC	500V AC/DC	500V AC/DC
DIELECTRIC WITHSTANDING VOLTAGE	2200V AC	2000V AC	2000V AC	2000V AC	2000V AC

PART NUMBER	FLS014x12S03	FLS014x19S03
FEMALE INSERT ARRANGEMENT FRONT VIEW	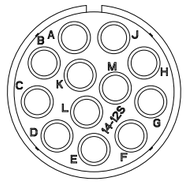	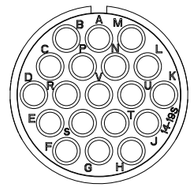
SUITABLE CONTACTS	16# CONTACTS	20# CONTACTS
RATED CURRENT	13A	7.5A-MACHINED CONT. 5A-STAMPED CONT.
RATED VOLTAGE	500V AC/DC	250V AC/DC
DIELECTRIC WITHSTANDING VOLTAGE	2000V AC	1500V AC

QUANTITY	PART NUMBER	DESCRIPTION	ITEM

MATERIALS LIST

UNLESS OTHERWISE SPECIFIED
1) All dimensions are in metric(mm).
2) Tolerances are as follows:
1 PL DEC ±0.30 | Fractions ±1/64
2 PL DEC ±0.15 | Angles ±1°
3 PL DEC ±0.08
3) Note reference = X

MATERIAL SPECIFICATIONS:

PROCESS SPECIFICATIONS:

NEXT ASS'Y:

SIGNATURES		DATE
DRAWN:	JUN	APR-26-2023
CHECKED:	JOE	APR-28-2023
ENGINEER:		
APPROVAL:	TOMMY	MAY-02-2023
CUSTOMER:		

THIS DRAWING IS SUPPLIED FOR INFORMATION ONLY. DESIGN FEATURES, SPECIFICATIONS AND PERFORMANCE DATA SHOWN HEREON ARE THE PROPERTY OF THE AMPHENOL CORPORATION. NO RIGHTS OF REPRODUCTION ARE IMPLIED. ALL DIMENSIONS ARE SUBJECT TO NORMAL MANUFACTURING VARIATIONS.

Amphenol
Sine Systems - www.amphenol-sine.com
44724 Morley Drive
Clinton Township, MI 48036

EcoMate Aquarius,RECEPTACLE, SQUARE FLANGE, xx POSITION, FEMALE,SHELL SIZE 14

SIZE	TYPE	DWG NO:	REVISION
B	C-	FLS014xxxS03	A2

SCALE: NONE | SHEET 3 OF 5

TITLE: EcoMate Aquarius,RECEPTACLE, SQUARE FLANGE, xx POSITION, FEMALE,SHELL SIZE 14
DWG NO: FLS014xxxS03
REV: A2
SH: 3
OF: 3

ecomate® RM/RSSM/Aquarius™ - Contact Size 3.6mm Options (1403 Insert Arrangement)

Machined, Crimp Contacts					
Part Number		Contact Size (AWG)	Wire Range (mm²)	For Use w End Cap	Plating
Male	Female				
MP10A23T-10	MS10A23T-10	8AWG	10.0 mm²	No	Tin
MP10A23S-10	MS10A23S-10	8AWG	10.0 mm²	No	Silver
MP10A23F-10	MS10A23F-10	8AWG	10.0 mm²	No	Gold Flash
MP10A23G5-10	MS10A23G5-10	8AWG	10.0 mm²	No	Gold 5µ"
MP10A23G10-10	MS10A23G10-10	8AWG	10.0 mm²	No	Gold 10µ"
MP10A23G15-10	MS10A23G15-10	8AWG	10.0 mm²	No	Gold 15µ"
MP10A23G30-10	MS10A23G30-10	8AWG	10.0 mm²	No	Gold 30µ"
MP10A23S-63	MS10A23S-63	12-10AWG	4.0 - 6.0 mm²	No	Silver
MP10A23F-63	MS10A23F-63	12-10AWG	4.0 - 6.0 mm²	No	Gold Flash
MP10A23TL	MS10A23T	12-10AWG	3.0 - 6.0 mm²	Yes	Tin
MP10A23SL	MS10A23S	12-10AWG	3.0 - 6.0 mm²	Yes	Silver
MP10A23FL	MS10A23F	12-10AWG	3.0 - 6.0 mm²	Yes	Gold Flash
MP10A23G5L	MS10A23G5	12-10AWG	3.0 - 6.0 mm²	Yes	Gold 5µ"
MP10A23G10L	MS10A23G10	12-10AWG	3.0 - 6.0 mm²	Yes	Gold 10µ"
MP10A23G15L	MS10A23G15	12-10AWG	3.0 - 6.0 mm²	Yes	Gold 15µ"
MP10A23G30L	MS10A23G30	12-10AWG	3.0 - 6.0 mm²	Yes	Gold 30µ"
MP10A23S-25	MS10A23S-25	16-14AWG	1.5 - 2.5 mm²	No	Silver
MP10A23F-25	MS10A23F-25	16-14AWG	1.5 - 2.5 mm²	No	Gold Flash

Machined, Tooling	
Part Number	Description
QXRT08	Contact Extraction Tool, # 8 (Ø 3.6mm) Contact
M300BT	Hand Crimper
WA27-300BT-EP	Pneumatic Crimper
TP968	Locator M3200BT and WA27-300BT-EP

Plating Options	
Symbol	Plating
T	Tin Plated (for Stamped & Formed Contacts)
S	Silver Plated 5Um (for Machined Contacts)
F	Gold Plated
G5	Gold Plated (Thickness 5µ")
G10	Gold Plated (Thickness 10µ")
G15	Gold Plated (Thickness 15µ")
G30	Gold Plated (Thickness 30µ")