# Automotive NR1640
# 200mA Ultra-low Noise Voltage Regulator

## KEY SPECIFICATIONS

- AEC-Q100 grade 1
- Input Voltage Range (Maximum Rating): 2.7 V to 5.5 V (6.5 V)
- Operating Temperature Range: −40 °C to 125 °C
- Output Voltage Range: 2.5 V to 4.8 V
- Output Current: 200 mA
- Quiescent Current: Typ.350 μA
- Output Noise Voltage: Typ.6 μVrms ($I_{OUT}$ = 100 mA)
- Ripple Rejection: Typ.80 dB (f = 1 kHz)
  Typ.80 dB (f = 100 kHz)
- Dropout Voltage: Typ.0.13 V
  ($I_{OUT}$ = 200 mA, $V_{SET}$ = 3.3 V)
- Thermal Shutdown Function: Typ.165 °C
- Slope of Output Voltage at Start-up:
  55 / 110 / 220 / 440 μs / V
  Selectable from 4 types
- Auto-discharge Function: Selectable by product name

## APPLICATIONS

- In-vehicle camera system
- High accuracy sensing systems

## OVERVIEW

The NR1640 is a CMOS-based ultra-low noise, high PSRR voltage regulator featuring 200 mA output current and 5.5 V maximum input voltage.
With noise characteristics of 6 μVrms and high ripple rejection of 80 dB or more @100 kHz, high quality power can be supplied, ideal for high precision sensing systems where noise is an issue.
The slope of output voltage at startup can be selected from 4 types.
These options will meet the demand of suppression of inrush current and start-up slope requirement. In addition, the auto discharge function option will contribute to make the output shutdown fast to discharge output capacitance with internal discharge FET.

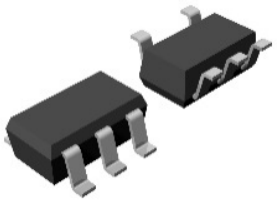

SOT-23-5-DC
2.9 × 2.8 × 1.1(㎜)

## TYPICAL APPLICATIONS

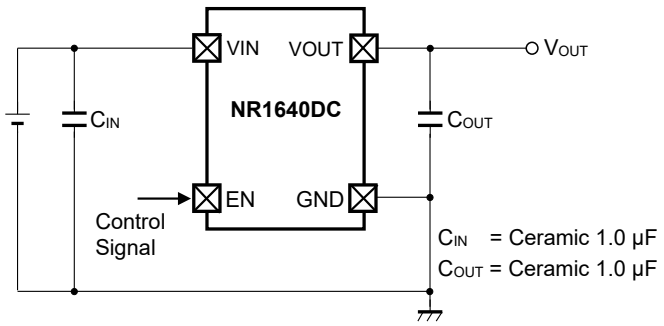


## PSRR TYPICAL CHARACTERISTICS

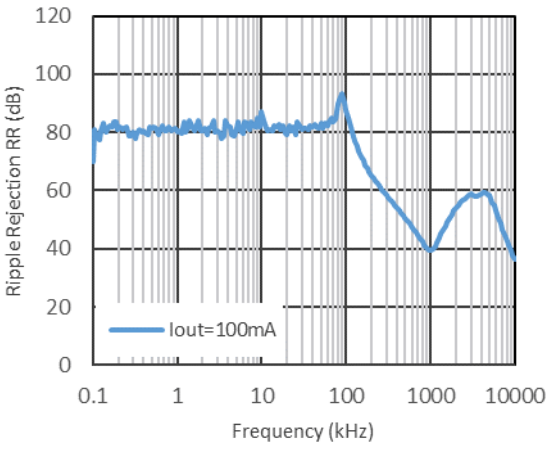


$V_{IN}$ = 5V, $V_{SET}$ = 3.3V

## ■ PRODUCT NAME INFORMATION

**NR1640 aa bbb c dd e**

Description of configuration

| composition | Item | Description |
|---|---|---|
| aa | Package Code | Indicates the package. Refer to the order information. |
| bbb | Output Voltage | Set Output Voltage ($V_{SET}$)<br>We have a lineup of major voltages in the range of 2.5 V (250) to 4.8 V (480). |
| c | Version | Indicates Slope of Output Voltage at Start-up and the selection of the auto discharge function. |
| dd | Packing | Refer to the packing specifications. |
| e | Grade | Indicates the quality grade. |

Version

| c | Slope of Output Voltage at Start-up | Auto-discharge Function |
|---|---|---|
| A | 55 µs / V | Yes |
| B | 110 µs / V | Yes |
| C | 220 µs / V | Yes |
| D | 440 µs / V | Yes |
| E | 55 µs / V | No |
| F | 110 µs / V | No |
| G | 220 µs / V | No |
| H | 440 µs / V | No |

Grade

| e | Applications | Operating Temperature Range | Test Temperature |
|---|---|---|---|
| P | Chassis, Body control and In-vehicle | −40°C to 125°C | 25°C, 125°C |
| Q | Powertrain and Safety driving related | −40°C to 125°C | -40°C, 25°C, 125°C |

## ■ ORDER INFORMATION

| PRODUCT NAME | PACKAGE | RoHS | HALOGEN-FREE | Plating Composition | MARKING | WEIGHT (mg) | Quantity per Reel (pcs) |
|---|---|---|---|---|---|---|---|
| NR1640DCbbbcE1e | SOT-23-5-DC | Yes | Yes | Sn | Reference | 13.6 | 3000 |

Click here for details.
Note: Contact our sales representatives for other voltages.

## ■ PIN DESCRIPTIONS

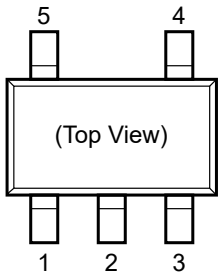


**SOT-23-5-DC Pin Configuration**

| Pin No. | Pin Name | I/O | Description |
|---|---|---|---|
| 1 | VIN | Power | Power Supply Input Pin<br>Connect the input capacitor between the VIN pin and GND. |
| 2 | GND | - | Ground Pin |
| 3 | EN | I | Enable Pin (Active-high)<br>Can be set the active state with "High" input, the shutdown state with "Low".<br>This pin is pulled down internally. |
| 4 | NC | - | No Connection<br>It is recommended to make it open to prevent short circuit with adjacent pins during mounting. |
| 5 | VOUT | O | Output Pin<br>Connect the output capacitor ($C_{OUT}$) between VOUT pin and GND. |

Please refer to "*TYPICAL APPLICATION CIRCUIT*" or "*THEORY OF OPERATION*" for details.

## ■ Internal Equivalent Circuit Diagram of Pin

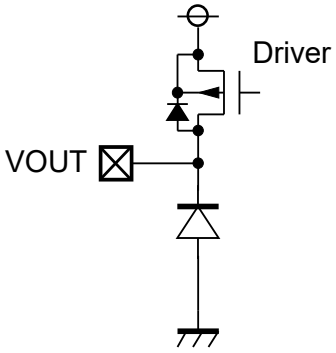


**Internal equivalent circuit diagram of VOUT pin**

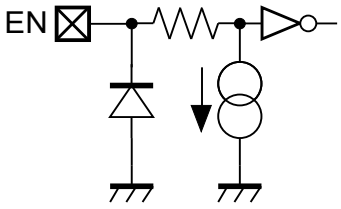


**Internal equivalent circuit diagram of EN pin**

## ■ ABSOLUTE MAXIMUM RATINGS

| Item | Symbol | Ratings | Unit |
|---|---|---|---|
| Input Voltage | $V_{IN}$ | −0.3 to 6.5 | V |
| EN Pin Input Voltage | $V_{EN}$ | −0.3 to 6.5 | V |
| Output Voltage | $V_{OUT}$ | −0.3 to $V_{IN}$ + 0.3 | V |
| Junction Temperature Range *1 | $T_j$ | −40 to 150 | °C |
| Storage Temperature Range | $T_{stg}$ | −55 to 150 | °C |

**ABSOLUTE MAXIMUM RATINGS**

Electronic and mechanical stress momentarily exceeded absolute maximum ratings may cause permanent damage and may degrade the lifetime and safety for both device and system using the device in the field. The functional operation at or over these absolute maximum ratings is not assured.

*1 Calculate the power consumption of the IC from the operating conditions, and calculate the junction temperature with the thermal resistance.
Please refer to "*THERMAL CHARACTERISTICS*" for the thermal resistance under our measurement board conditions.

## ■ THERMAL CHARACTERISTIC

| Item | Measurement Result |
|---|---|
| Thermal Resistance (θja) | θja = 150°C/W |
| Thermal Characterization Parameter (ψjt) | ψjt = 51°C/W |

θja : Junction-to-Ambient Thermal Resistance
ψjt : Junction-to-Top Thermal Characterization Parameter

## ■ ELECTROSTATIC DISCHARGE(ESD) PROTECTION VOLTAGE

| Item | Conditions | Protection Voltage |
|---|---|---|
| $V_{HBM}$ | HBM : C = 100 pF, R = 1.5 kΩ | ±2000 V |
| $V_{CDM}$ | CDM | ±1000 V |

ELECTROSTATIC DISCHARGE RATINGS

The electrostatic discharge test is done based on JESD47.
In the HBM method, ESD is applied using the power supply pin and GND pin as reference pins.

## ■ RECOMMENDED OPERATING CONDITIONS

| Item | Symbol | Ratings | Unit |
|---|---|---|---|
| Input Voltage | $V_{IN}$ | 2.7 to 5.5 | V |
| Operating Temperature Range | $T_a$ | −40 to 125 | °C |
| Output Current | $I_{OUT}$ | 0 to 200 | mA |

RECOMMENDED OPERATING CONDITIONS

All of electronic equipment should be designed that the mounted semiconductor devices operate within the recommended operating conditions. The semiconductor devices cannot operate normally over the recommended operating conditions, even if when they are used over such conditions by momentary electronic noise or surge. And the semiconductor devices may receive serious damage when they continue to operate over the recommended operating conditions.

## ■ ELECTRICAL CHARACTERISTICS

$V_{IN}$ = $V_{SET}$ + 1 V (Max. 5.5 V) , $I_{OUT}$ = 1 mA, $C_{IN}$ = 1.0 µF, $C_{OUT}$ = 1.0 µF
Unless otherwise specified.
For parameter that do not describe the temperature condition, the MIN / MAX value under the condition of −40 °C ≤ $T_a$ ≤ 125 °C is described.

**NR1640DCxxxxE1x**

| Parameter | Symbol | Conditions | | MIN | TYP | MAX | Unit |
|---|---|---|---|---|---|---|---|
| Output Voltage | $V_{OUT}$ | $T_a$ = 25°C | | ×0.99 | - | ×1.01 | V |
| | | −40°C ≤ $T_a$ ≤ 125°C | | ×0.985 | - | ×1.015 | V |
| Quiescent Current | $I_Q$ | $V_{IN}$ = $V_{SET}$ + 1 V (Max. 5.5 V)<br>$I_{OUT}$ = 0 mA | | - | 350 | 450 | µA |
| Shutdown Current | $I_{SD}$ | $V_{IN}$ = 5.5 V, $V_{EN}$ = 0 V | | - | 0.1 | 2.0 | µA |
| Load Regulation | $\Delta V_{OUT}/\Delta I_{OUT}$ | 1 mA ≤ $I_{OUT}$ ≤ 200 mA | | - | - | 20 | mV |
| Line Regulation | $\Delta V_{OUT}/\Delta V_{IN}$ | 2.5 V ≤ $V_{SET}$ ≤ 3.9 V, $V_{SET}$ + 0.5 V ≤ $V_{IN}$ ≤ 5.5 V<br>$I_{OUT}$ = 1 mA | | - | - | 0.1 | %/V |
| | | 3.9 V < $V_{SET}$ < 4.5 V, $V_{SET}$ + 0.5 V ≤ $V_{IN}$ ≤ 5.5 V<br>$I_{OUT}$ = 1 mA | | - | - | 0.15 | |
| | | 4.5 V ≤ $V_{SET}$ ≤ 4.8 V, $V_{SET}$ + 0.3 V ≤ $V_{IN}$ ≤ 5.5 V<br>$I_{OUT}$ = 1 mA | | | | | |
| Dropout Voltage | $V_{DO}$ | $I_{OUT}$ = 200 mA | 2.5 V ≤ $V_{SET}$ < 2.9 V | - | 0.15 | 0.23 | V |
| | | | 2.9 V ≤ $V_{SET}$ < 4 V | - | 0.13 | 0.2 | |
| | | | 4 V ≤ $V_{SET}$ ≤ 4.8 V | - | 0.095 | 0.15 | |
| Ripple Rejection | RR | f = 1 kHz | | - | 80 | - | dB |
| | | f = 100 kHz | | - | 80 | - | dB |
| Output Noise Voltage | $V_{NOISE}$ | f = 10 Hz to 100 kHz, $I_{OUT}$ = 100 mA | | - | 6 | - | µVrms |
| UVLO Release Voltage*1 | $V_{UVLOREL}$ | $V_{IN}$ = Rising | | - | - | 2.7 | V |
| UVLO Detection Voltage*1 | $V_{UVLODET}$ | $V_{IN}$ = Falling | | 2.5 | - | - | V |
| Output Current Limit | $I_{LIM}$ | $V_{IN}$ = $V_{SET}$ + 1 V (Max. 5.5 V) | | 200 | 280 | - | mA |
| Short Current Limit | $I_{SC}$ | $V_O$ = 0 V | | 40 | 75 | 100 | mA |
| Limit Current at Start-up | $I_{LIMRISE}$ | $V_O$ = 0 V | | 100 | 140 | 180 | mA |
| Slope of Output Voltage at Start-up | $V_{OUTSS}$ | NR1640DCxxxA/E | | 37.5 | 55 | 72.5 | µs/V |
| | | NR1640DCxxxB/F | | 75 | 110 | 145 | |
| | | NR1640DCxxxC/G | | 150 | 220 | 290 | |
| | | NR1640DCxxxD/H | | 300 | 440 | 580 | |
| EN Pin High Input Voltage | $V_{ENH}$ | | | 1.0 | - | - | V |
| EN Pin Low Input Voltage | $V_{ENL}$ | | | 0 | - | 0.4 | V |
| EN Pin Current | $I_{EN}$ | $V_{IN}$ = $V_{EN}$ = 5.5 V | | 0.05 | 0.37 | 0.6 | µA |
| Discharge FET On-resistance (ver. A/B/C/D) | $R_{ONDIS}$ | $V_{IN}$ = 3.6 V, $V_{EN}$ = 0 V, $V_O$ = 0.1 V | | - | 15 | 30 | Ω |
| Thermal shutdown detection temperature | $T_{SDDET}$ | $T_j$ = Rising | | 150 | 165 | - | °C |
| Thermal shutdown release temperature | $T_{SDREL}$ | $T_j$ = Falling | | 125 | 135 | - | °C |

All test parameters listed in Electrical Characteristics are done under the following conditions, except for ripple removal and output noise voltage.

NR1640DCxxxxxxP $T_j \approx T_a$ = 25°C, 125°C
NR1640DCxxxxxxQ $T_j \approx T_a$ = -40°C, 25°C, 125°C

*1 Due to the circuit configuration, $V_{UVLOF} \geq V_{UVLOR}$ does not hold. The hysteresis is Typ.0.08 V

## ■ PRODUCT-SPECIFIC ELECTRICAL CHARACTERISTICS

| PRODUCT NAME | $V_{OUT}$ ($T_a$ = 25°C) | | | $V_{OUT}$ (-40 ≤ $T_a$ ≤ 125°C) | | |
|---|---|---|---|---|---|---|
| | MIN | TYP | MAX | MIN | TYP | MAX |
| NR1640DC250xxxx | 2.475 | 2.5 | 2.525 | 2.462 | 2.5 | 2.538 |
| NR1640DC280xxxx | 2.772 | 2.8 | 2.828 | 2.758 | 2.8 | 2.842 |
| NR1640DC290xxxx | 2.871 | 2.9 | 2.929 | 2.856 | 2.9 | 2.944 |
| NR1640DC300xxxx | 2.970 | 3.0 | 3.030 | 2.955 | 3.0 | 3.045 |
| NR1640DC330xxxx | 3.267 | 3.3 | 3.333 | 3.250 | 3.3 | 3.350 |
| NR1640DC340xxxx | 3.366 | 3.4 | 3.434 | 3.349 | 3.4 | 3.451 |
| NR1640DC480xxxx | 4.752 | 4.8 | 4.848 | 4.728 | 4.8 | 4.872 |

Above parameters are all tested under the following conditions:

NR1640DCxxxxxxP $T_j \approx T_a$ = 25°C, 125°C
NR1640DCxxxxxxQ $T_j \approx T_a$ = -40°C, 25°C, 125°C

## ■ TYPICAL APPLICATION CIRCUIT

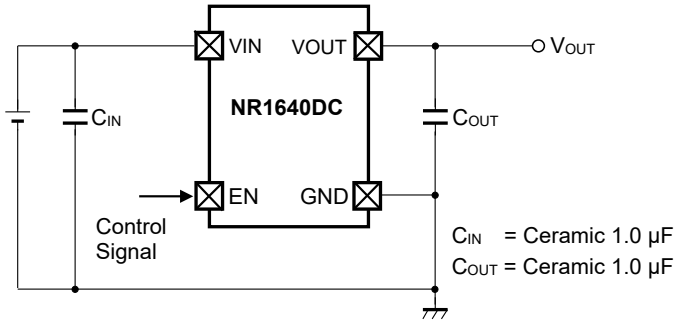


**NR1640DC Typical Application Circuit**

### Technical Notes Related to External Components

Ensure the VIN and GND lines are sufficiently robust. If their impedances are too high, noise pickup or unstable operation may result. Connect a 1.0 µF or more input capacitor ($C_{IN}$) between the VIN and GND pins with shortest-distance wiring.

It is recommended to use a ceramic capacitor of 6.3 V and more such as the X7R having small temperature dependence to ESR, ESL, and capacitance.

Phase compensation is provided to secure stable operation even when the load current is varied. For this purpose, use a ceramic capacitor of 1.0 µF or more with ESR (Equivalent Series Resistance) of up to 300 mΩ to connect an output capacitor ($C_{OUT}$) between the VOUT and GND pins with shortest-distance wiring. Besides, set for the output capacitor to ensure the following effective capacitance in consideration of the dependence of temperature, DC bias, and package size.

| Set Output Voltage ($V_{SET}$) | Effective Capacity |
|---|---|
| 2.5 V ≤ $V_{SET}$ ≤ 3.3 V | 0.7 µF |
| 3.3 V < $V_{SET}$ ≤ 4.8 V | 0.6 µF |

In case of using an output capacitor of 1.0 µF or more, place a 1.0 µF ceramic capacitor as close as possible.
When using a capacitor with a large ESR such as a tantalum capacitor, select a component that satisfies the stability of the ESR. When using a capacitor with a large ESR such as a tantalum capacitor, select a component that satisfies the stability of the ESR. It is recommend using a low ESR capacitor that is sufficient for stable operation.

## ■ BLOCK DIAGRAMS

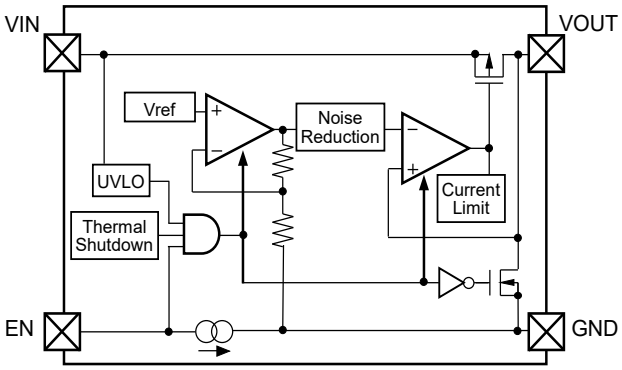


NR1640DCxxxA/B/C/D Block Diagram

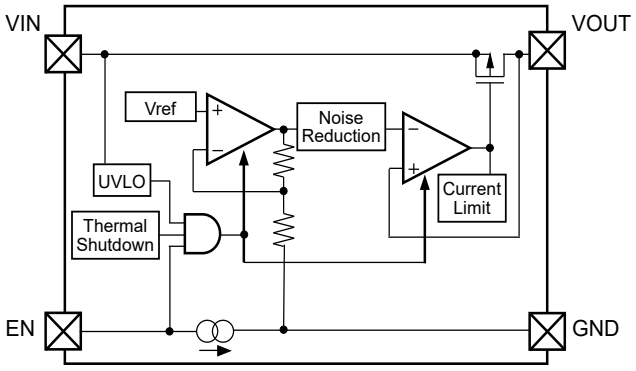


NR1640DCxxxE/F/G/H Block Diagram

## ■ THEORY OF OPERATION

### ● Enable Function

Forcing above designated "High" voltage to EN pin, the NR1640 becomes active. Forcing below designated "Low" voltage to EN pin shuts down the NR1640. The EN pin is pulled down with a constant current of Typ.0.37 μA inside the IC. In shutdown condition, all functions are disabled except Auto Discharge function. (Option) With Auto-Discharge option, the MOSFET to discharge the output capacitor turns on and the output is pulled down to GND. Without Auto-Discharge option, the output becomes "Hi-Z". EN pin can accept input range voltage regardless of the input of VIN pin. If Enable function is not necessary, tie EN pin to VIN pin or other designated "High" voltage node at start-up.

### ● Auto Discharge Function

When turned off, the Vout voltage drops rapidly to near 0V by discharging the charge stored in the output capacitor through the MOSFET connected between the VOUT and GND pins. The auto discharge function is enabled when the EN pin = "low" or the thermal shutdown detection. This function is effective when the input voltage aboves the minimum operating voltage. On-resistance of MOSFET is Typ.15Ω.

### ● Thermal Shutdown

When the junction temperature exceeds the thermal shutdown detection temperature (Typ.165°C), this IC cuts off the output and suppresses the self-heating. When the junction temperature falls below the thermal shutdown release temperature (Typ.135°C), this IC will restart with the soft start operation.

- Soft-start / Inrush Current Limit

The soft start function is a function that makes the rise of the output voltage ($V_{SET}$) a fixed time ($V_{SET}$ x $V_{OUTSS}$) by starting up the internal reference voltage generated inside the IC with the selected slope of output voltage at start-up ($V_{OUTSS}$) .
By this function, the output voltage at start-up rises up slowly and the inrush current at start-up can be suppressed. NR1640 builts in the Inrush current limit circuit. After the EN pin becomes "High", the inrush current which flows at charging the $C_{OUT}$, is limited at Typ.140 mA.
If an effective capacitance value of the connected $C_{OUT}$ is larger than 0.14 x $V_{OUTSS}$, the charging current is limited. So, the output voltage rises more slowly than the selected slope of output voltage at start-up ($V_{OUTSS}$). If the load current ($I_{LOAD}$) is smaller than the charging current to the $C_{OUT}$, the output voltage ramp up time is determined by the inrush current limit value and $C_{OUT}$ value. When the effective capacity value of $C_{OUT}$ is about 0.14 x $V_{OUTSS}$ or more, the output turning on time ($t_{ON}$) can be calculated from the following equation:

$t_{ON} = t_D + C_{OUT} \times V_{SET} / I_{LIMRISE}$
$t_D$ : Delay Time at Start-up 35µs
$V_{SET}$ : Set Output Voltage
$I_{LIMRISE}$ : Limit Current at Start-up Typ.140mA

If the load current ($I_{LOAD}$) exists other than the charge current to $C_{OUT}$ during start-up, the start-up time is extended.
The load current over $I_{LIMRISE}$ may interfere charging of $C_{OUT}$ and the output does not rise up.

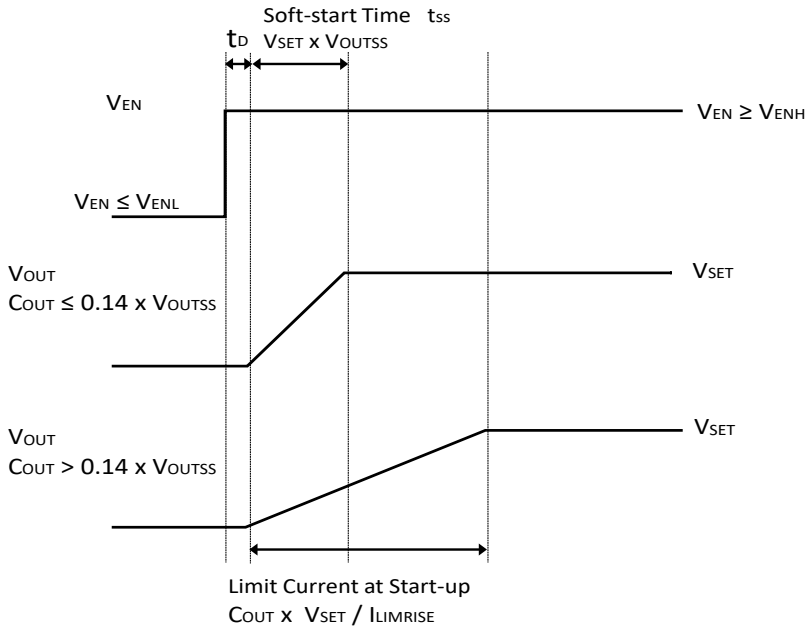

## ■THERMAL CHARACTERISTICS

Thermal characteristics depend on the mounting conditions.
The following measurement conditions are based on JEDEC STD. 51.

**Measurement Conditions**

| Item | Measurement Conditions |
|---|---|
| Measurement status | Mounting on Board (Wind Velocity = 0 m/s) |
| Board material | Glass Cloth Epoxy Plastic (Four-Layer Board) |
| Board size | 76.2 mm × 114.3 mm × 0.8 mm |
| Wiring rate | Outer Layer (First Layer):<br>Less than 95% of 50 mm Square<br>Inner Layers (Second and Third Layers):<br>Approx. 100% of 50 mm Square<br>Outer Layer (Fourth Layer):<br>Approx. 100% of 50 mm Square |
| Through hole | ϕ 0.3 mm ×7 pcs |

**Measurement Result**

| Item | Measurement Result |
|---|---|
| Thermal Resistance (θja) | θja = 150°C/W |
| Thermal Characterization Parameter (ψjt) | ψjt = 51°C/W |

θja : Junction-to-Ambient Thermal Resistance

ψjt : Junction-to-Top Thermal Characterization Parameter

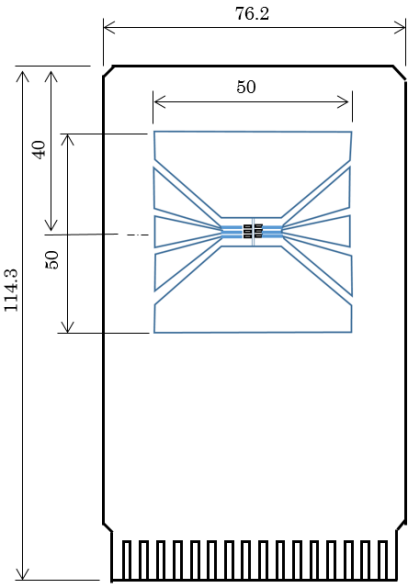


**Measurement Board Pattern**

## ■CALCULATION METHOD OF JUNCTION TEMPERATURE

The junction temperature ($T_j$) can be calculated from the following formula.

$T_j = T_a + \theta ja \times P$
$T_j = Tc\ (top) + \psi jt \times P$

$T_a$: Ambient temperature
Tc (top) : Package mark side center temperature
P (Power consumption under user's conditions) : $(V_{IN} - V_{OUT}) \times I_{OUT}$

## ■ MARKING SPECIFICATION

①②③ : Product Code (Abbreviation)
④⑤ : Lot Number ··· Alphanumeric Serial Number

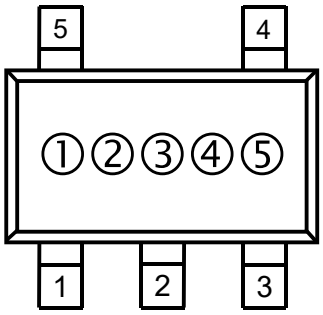


**SOT-23-5-DC Marking**

| NOTICE |
| --- |
| There can be variation in the marking when different AOI (Automated Optical Inspection) equipment is used. In the case of recognizing the marking characteristic with AOI, please contact our sales or distributor before attempting to use AOI. |

■ ORDER INFORMATION (ALL)

| PRODUCT NAME | PACKAGE | RoHS | HALOGEN-FREE | Plating Composition | MARKING | WEIGHT (mg) | Quantity per Reel (pcs) |
|---|---|---|---|---|---|---|---|
| NR1640DC250AE1e | SOT-23-5-DC | Yes | Yes | Sn | A00 | 13.6 | 3000 |
| NR1640DC280AE1e | | | | | A01 | | |
| NR1640DC290AE1e | | | | | A06 | | |
| NR1640DC300AE1e | | | | | A02 | | |
| NR1640DC330AE1e | | | | | A03 | | |
| NR1640DC340AE1e | | | | | A04 | | |
| NR1640DC480AE1e | | | | | A05 | | |
| NR1640DC250BE1e | | | | | B00 | | |
| NR1640DC280BE1e | | | | | B01 | | |
| NR1640DC290BE1e | | | | | B06 | | |
| NR1640DC300BE1e | | | | | B02 | | |
| NR1640DC330BE1e | | | | | B03 | | |
| NR1640DC340BE1e | | | | | B04 | | |
| NR1640DC480BE1e | | | | | B05 | | |
| NR1640DC250CE1e | | | | | C00 | | |
| NR1640DC280CE1e | | | | | C01 | | |
| NR1640DC290CE1e | | | | | C06 | | |
| NR1640DC300CE1e | | | | | C02 | | |
| NR1640DC330CE1e | | | | | C03 | | |
| NR1640DC340CE1e | | | | | C04 | | |
| NR1640DC480CE1e | | | | | C05 | | |
| NR1640DC250DE1e | | | | | D00 | | |
| NR1640DC280DE1e | | | | | D01 | | |
| NR1640DC290DE1e | | | | | D06 | | |
| NR1640DC300DE1e | | | | | D02 | | |
| NR1640DC330DE1e | | | | | D03 | | |
| NR1640DC340DE1e | | | | | D04 | | |
| NR1640DC480DE1e | | | | | D05 | | |
| NR1640DC250EE1e | | | | | E00 | | |
| NR1640DC280EE1e | | | | | E01 | | |
| NR1640DC290EE1e | | | | | E06 | | |
| NR1640DC300EE1e | | | | | E02 | | |
| NR1640DC330EE1e | | | | | E03 | | |
| NR1640DC340EE1e | | | | | E04 | | |
| NR1640DC480EE1e | | | | | E05 | | |
| NR1640DC250FE1e | | | | | F00 | | |
| NR1640DC280FE1e | | | | | F01 | | |
| NR1640DC290FE1e | | | | | F06 | | |
| NR1640DC300FE1e | | | | | F02 | | |
| NR1640DC330FE1e | | | | | F03 | | |
| NR1640DC340FE1e | | | | | F04 | | |
| NR1640DC480FE1e | | | | | F05 | | |

| PRODUCT NAME | PACKAGE | RoHS | HALOGEN-FREE | Plating Composition | MARKING | WEIGHT (mg) | Quantity per Reel (pcs) |
|---|---|---|---|---|---|---|---|
| NR1640DC250GE1e | SOT-23-5-DC | Yes | Yes | Sn | G00 | 13.6 | 3000 |
| NR1640DC280GE1e | | | | | G01 | | |
| NR1640DC290GE1e | | | | | G06 | | |
| NR1640DC300GE1e | | | | | G02 | | |
| NR1640DC330GE1e | | | | | G03 | | |
| NR1640DC340GE1e | | | | | G04 | | |
| NR1640DC480GE1e | | | | | G05 | | |
| NR1640DC250HE1e | | | | | H00 | | |
| NR1640DC280HE1e | | | | | H01 | | |
| NR1640DC290HE1e | | | | | H06 | | |
| NR1640DC300HE1e | | | | | H02 | | |
| NR1640DC330HE1e | | | | | H03 | | |
| NR1640DC340HE1e | | | | | H04 | | |
| NR1640DC480HE1e | | | | | H05 | | |

## ■ APPLICATION NOTES

### Phase Compensation

Phase compensation is provided to secure stable operation even when the load current is varied by utilizing capacity of the output ceramic capacitor and Equivalent Series Resistance (ESR). For this purpose, use a capacitor for Cout with the capacity of equal or more than 1.0 µF. Depending on the ESR, the output may oscillate, so evaluate carefully including the temperature characteristics and frequency characteristics. Connect a capacitor (CIN) of 1.0 µF or more between the VDD and GND pins, and keep the wiring as short as possible.

### Thermal Shutdown Function

The thermal shutdown function prevents the IC from fuming and ignition but does not ensure the IC's reliability or keep the IC below the absolute maximum ratings.

The thermal shutdown function does not operate on the heat generated by other than the normal IC operation such as latch-up and overvoltage application.

The thermal shutdown function operates in a state over the absolute maximum ratings, therefore the thermal shutdown function should not be used for a system design.

### Evaluation Board / PCB Layout

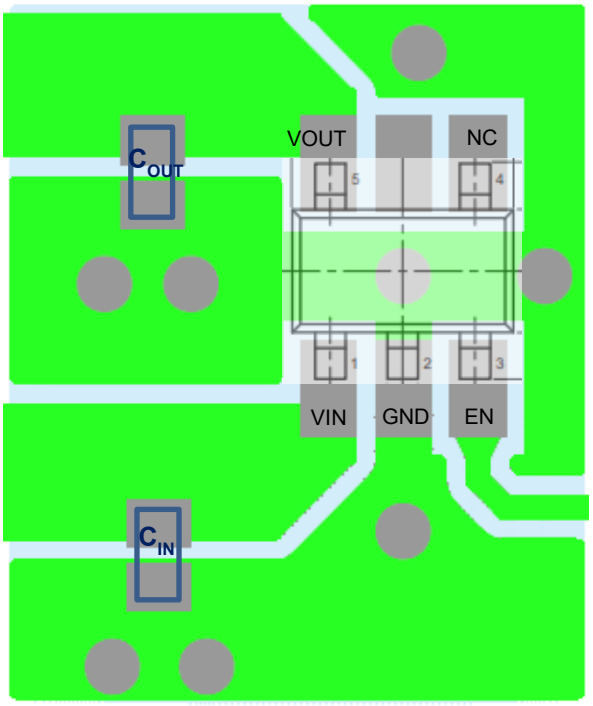

## ■ TYPICAL CHARACTERISTICS

Note: Typical Characteristics are intended to be used as reference data; they are not guaranteed.

1) Output Voltage vs Temperature
$V_{IN}$ = $V_{SET}$ + 1 V (Max = 5.5 V), $I_{OUT}$ = 1 mA, $C_{IN}$ = $C_{OUT}$ = 1.0 µF

NR1640DC250x

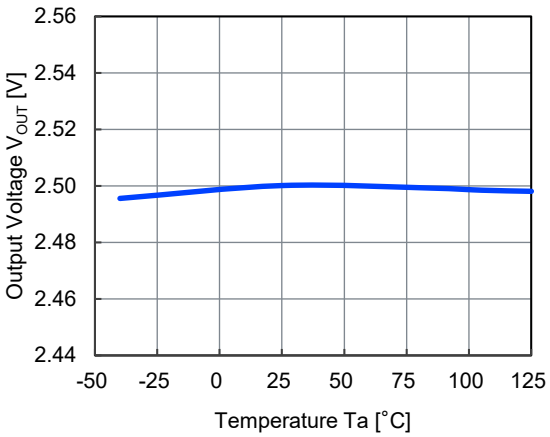


NR1640DC330x

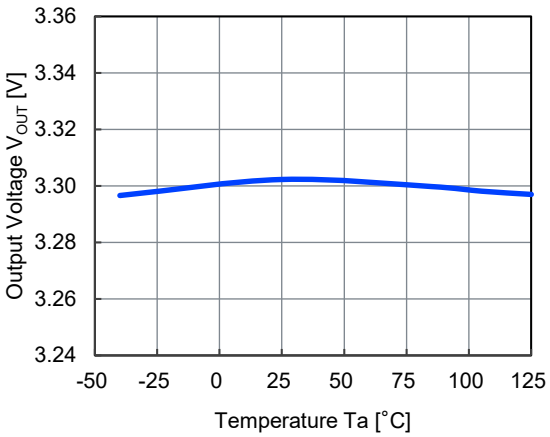


NR1640DC480x

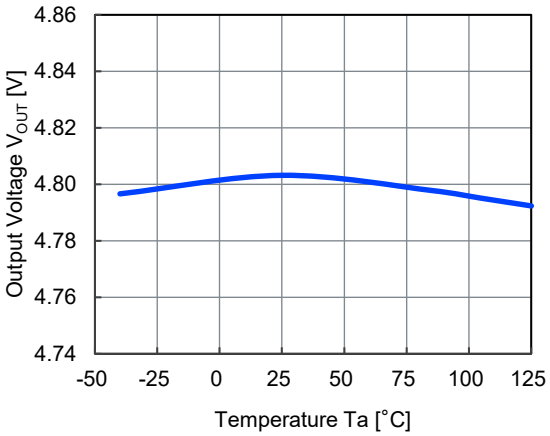


2) Quiescent Current vs Temperature
$V_{IN}$ = $V_{SET}$ + 1 V (Max = 5.5 V), $C_{IN}$ = $C_{OUT}$ = 1.0 µF

NR1640DC250x

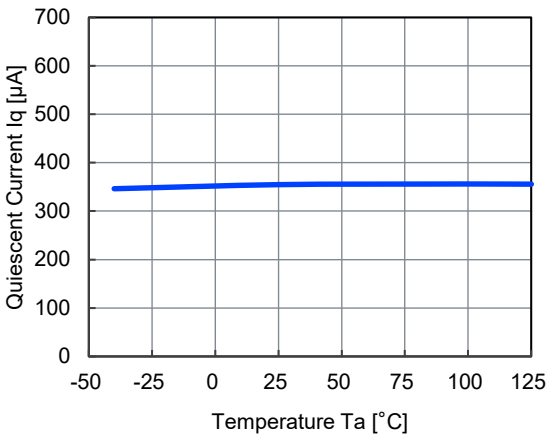


NR1640DC330x

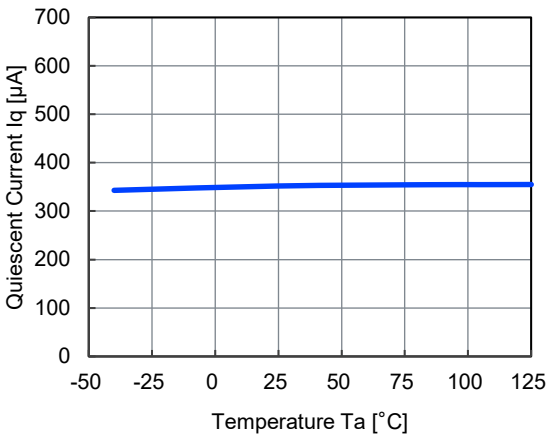

NR1640DC480x

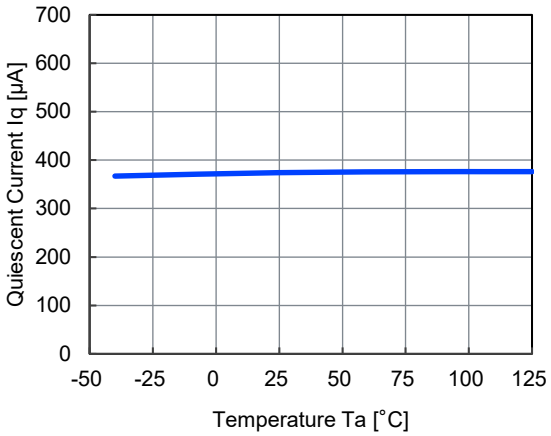


3) Dropout Voltage vs Output Current
$C_{IN}$ = $C_{OUT}$ = 1.0 μF
NR1640DC330x

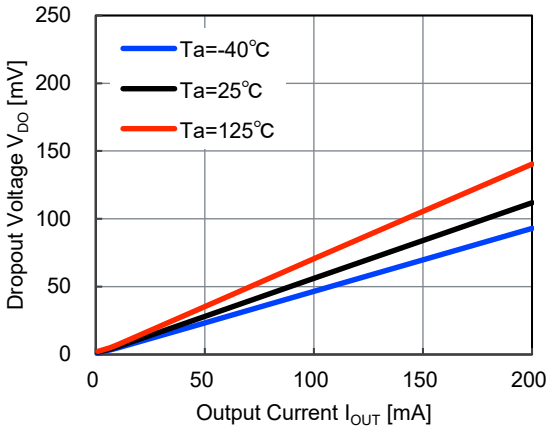


NR1640DC480x

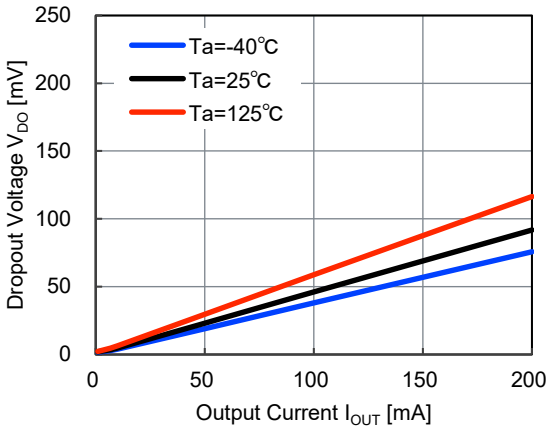


4) Dropout Voltage vs Set Output Voltage
$C_{IN}$ = $C_{OUT}$ = 1.0 μF, $T_a$ = 25°C
NR1640DCxxxx

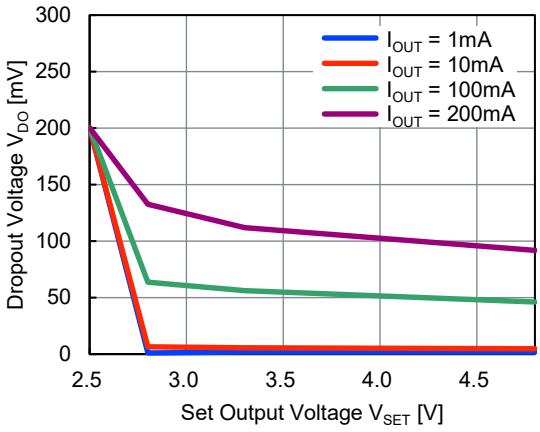

5) Output Voltage vs Output Current
$V_{IN}$ = $V_{SET}$ + 1 V (Max = 5.5 V), $C_{IN}$ = $C_{OUT}$ = 1.0 µF, Ta = 25°C

NR1640DC250x

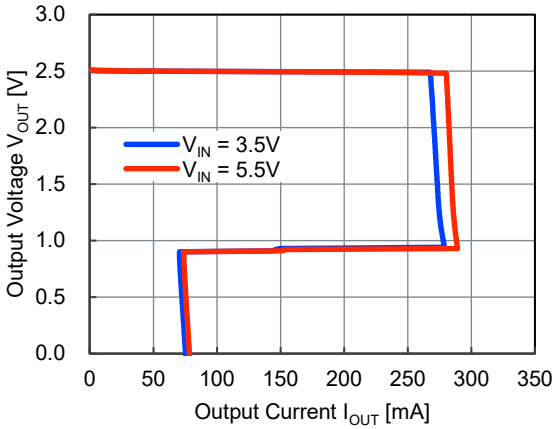


NR1640DC330x

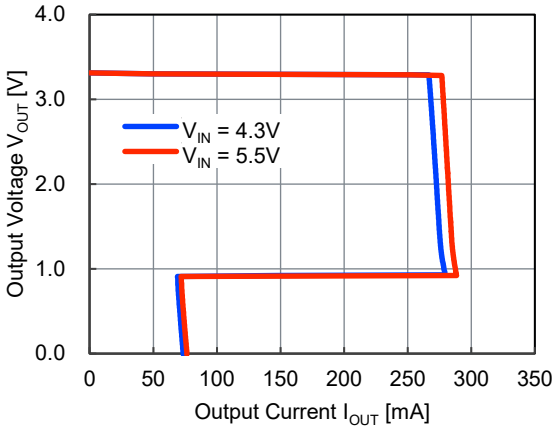


NR1640DC480x

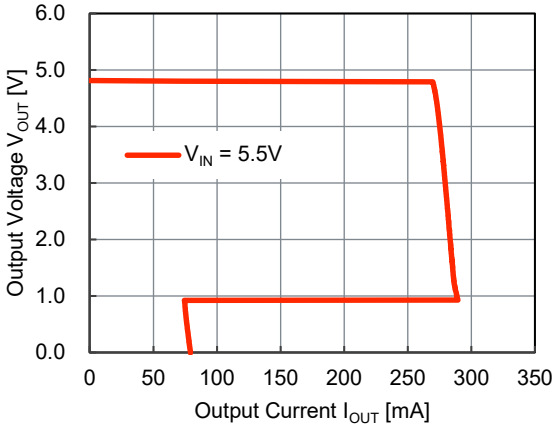


6) Output Voltage vs Input Voltage
$V_{IN}$ = $V_{SET}$ + 1 V (Max = 5.5 V) to 0 V, $C_{IN}$ = $C_{OUT}$ = 1.0 µF, $T_a$ = 25°C

NR1640DC250x, ($V_{IN}$=2.5V to 3.5V)

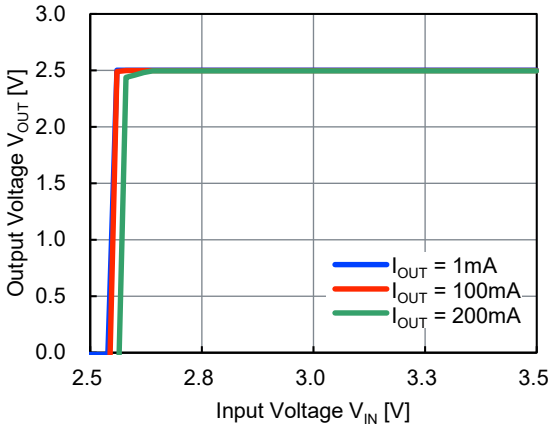


NR1640DC250x, ($V_{IN}$=2.3V to 2.8V)

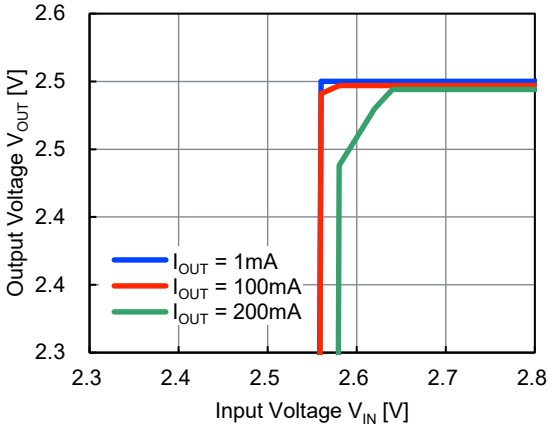

NR1640DC330x, ($V_{IN}$=2.5V to 4.3V)

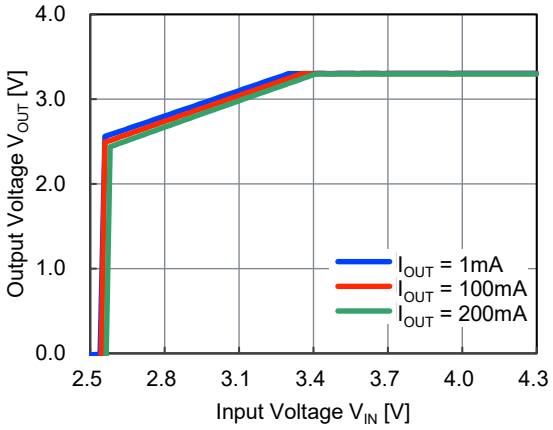


NR1640DC330x, ($V_{IN}$=3.1V to 3.7V)

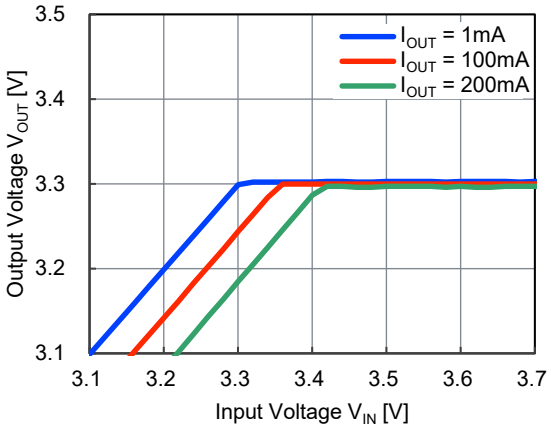


NR1640DC480x, ($V_{IN}$=2.5V to 5.5V)

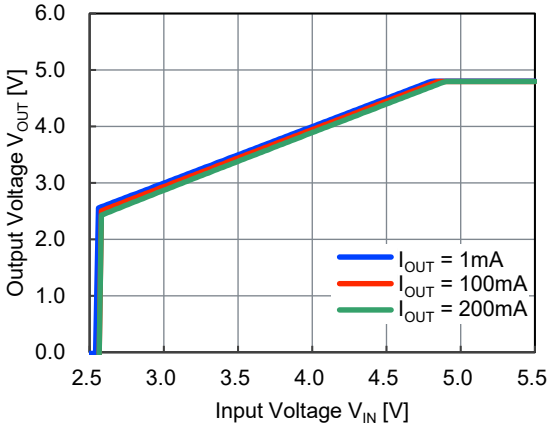


NR1640DC480x, ($V_{IN}$=4.6V to 5.5V)

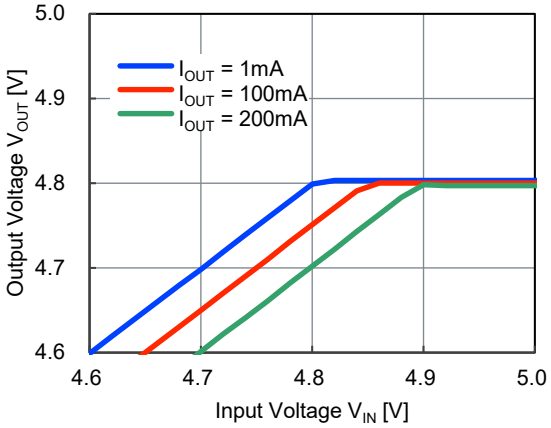


7) Quiescent Current vs Input Voltage

$V_{IN}$ = $V_{SET}$ + 1 V (Max = 5.5 V) to 0 V, $C_{IN}$ = $C_{OUT}$ = 1.0 µF, $T_a$ = 25°C

NR1640DC250x

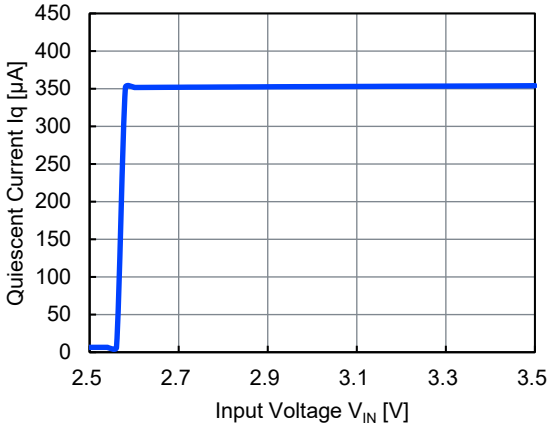


NR1640DC330x

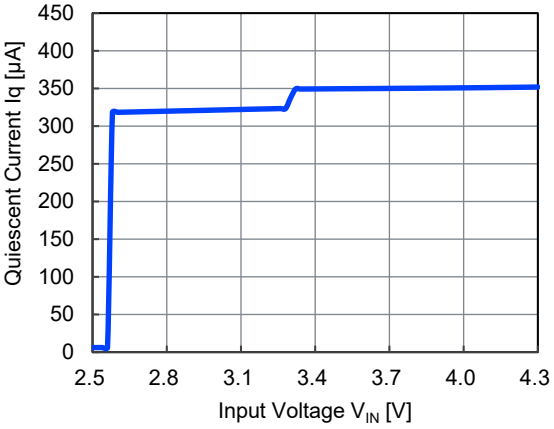

NR1640DC480x

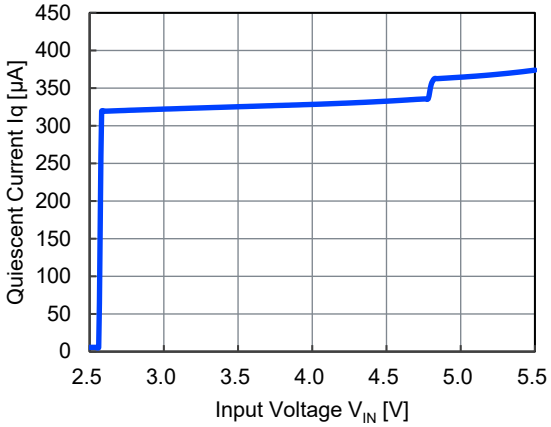


8) EN "High / Low" Input Voltage vs Temperature
$V_{IN}$ = $V_{SET}$ + 1 V (Max = 5.5 V), $C_{IN}$ = $C_{OUT}$ = 1.0 µF
NR1640DCxxxx, EN = "High"

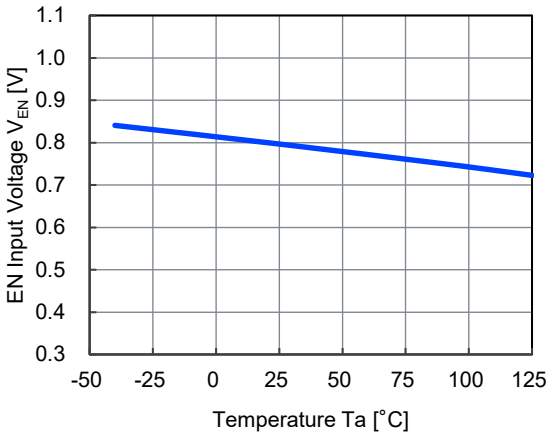


NR1640DCxxxx, EN = "Low"

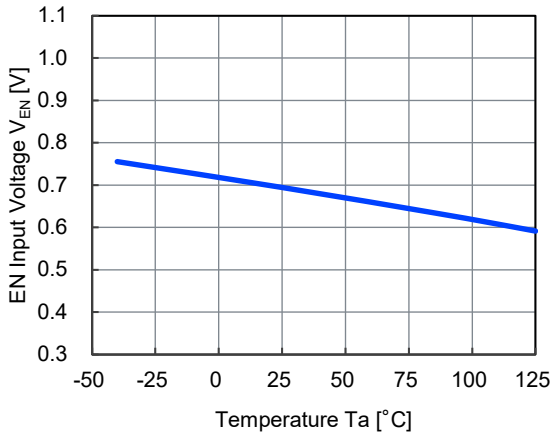


9) Ripple Rejection vs Frequency
$V_{IN}$ = $V_{SET}$ + 1 V (Max = 5.5 V), Vripple = 0.2 Vp-p, $C_{OUT}$ = 1.0 µF, $T_a$ = 25°C
NR1640DC250x

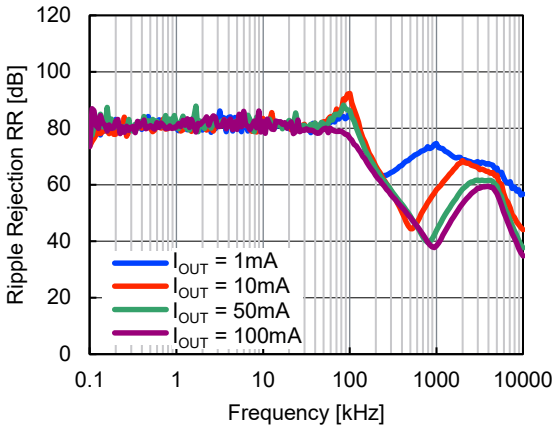


NR1640DC290x

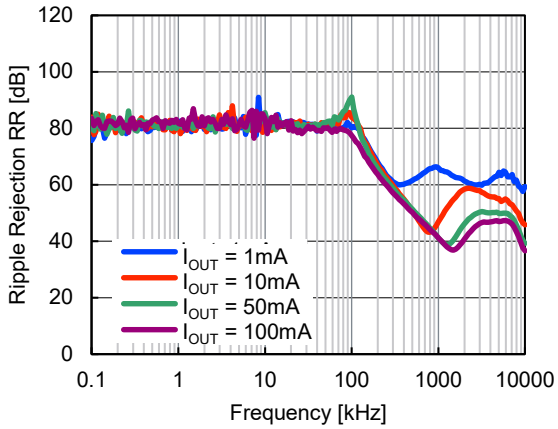

NR1640DC330x

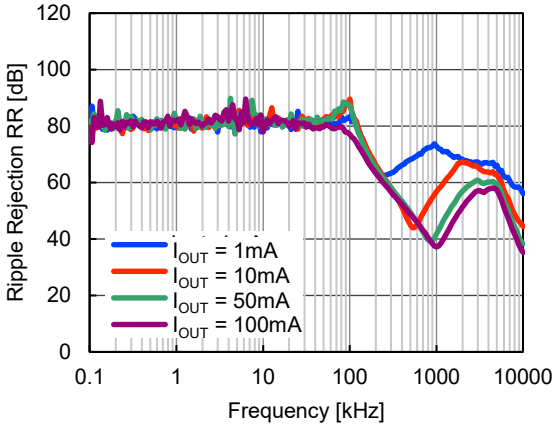


NR1640DC480x

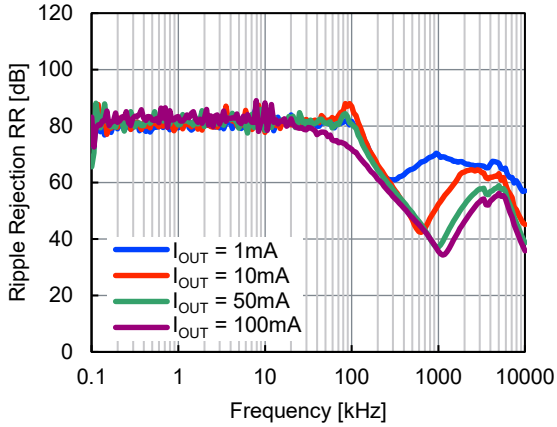


10) Ripple Rejection vs Input Voltage

$V_{IN}$ = $V_{SET}$ to 5.5 V (Min = 2.7 V), Vripple = 0.2 Vp-p, $C_{OUT}$ = 1.0 µF, $T_a$ = 25°C

NR1640DC250x, $I_{OUT}$ = 1 mA

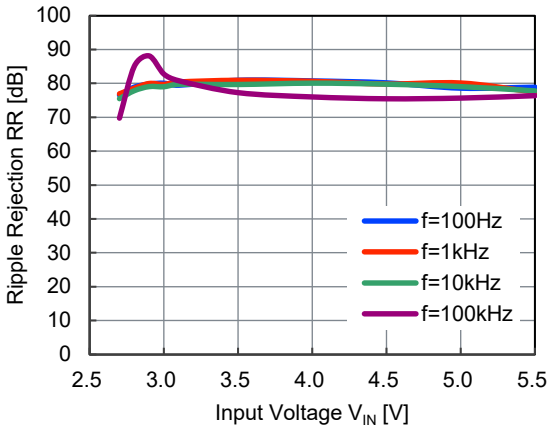


NR1640DC250x, $I_{OUT}$ = 10 mA

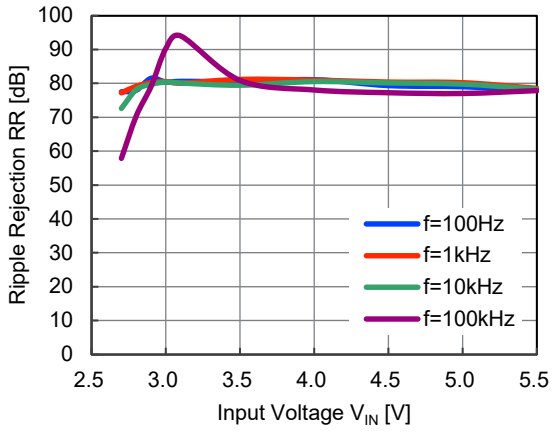


NR1640DC250x, $I_{OUT}$ = 50 mA

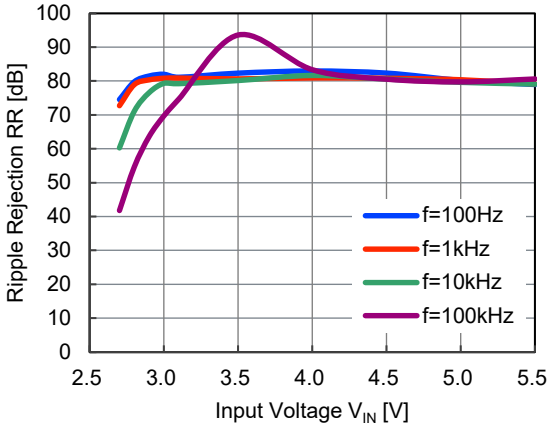


NR1640DC250x, $I_{OUT}$ = 100 mA

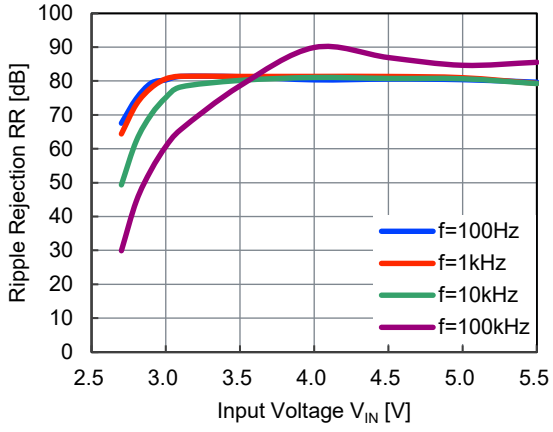

NR1640DC290x, $I_{OUT}$ = 1 mA

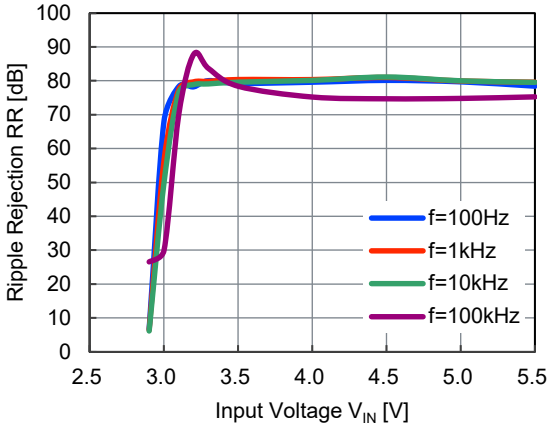


NR1640DC290x, $I_{OUT}$ = 10 mA

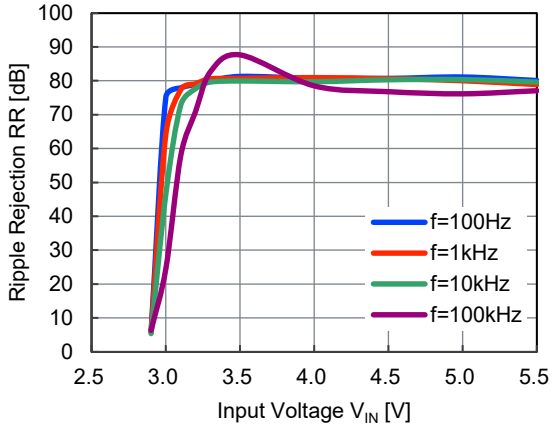


NR1640DC290x, $I_{OUT}$ = 50 mA

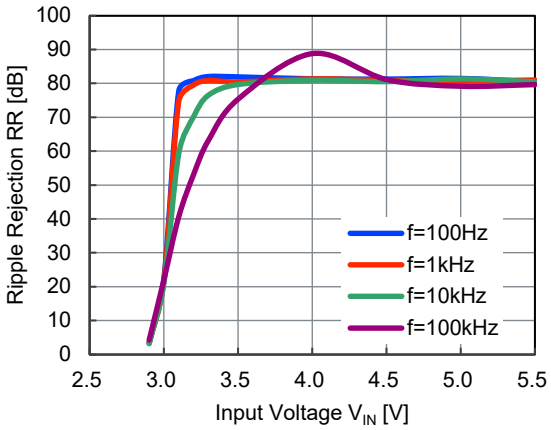


NR1640DC290x, $I_{OUT}$ = 100 mA

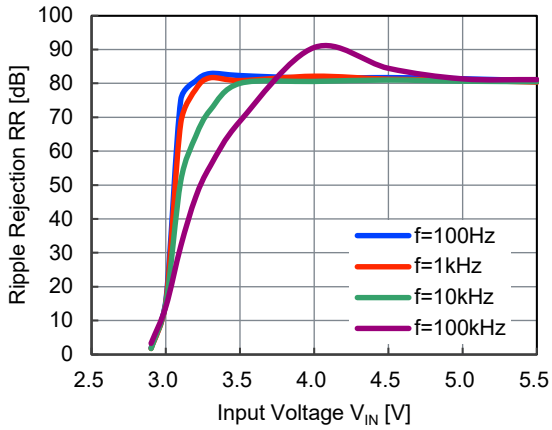


NR1640DC330x, $I_{OUT}$ = 1 mA

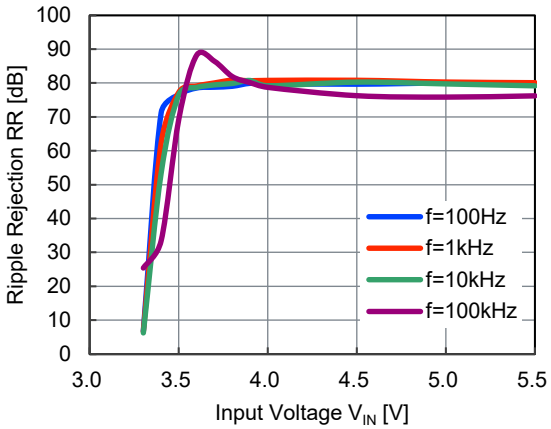


NR1640DC330x, $I_{OUT}$ = 10 mA

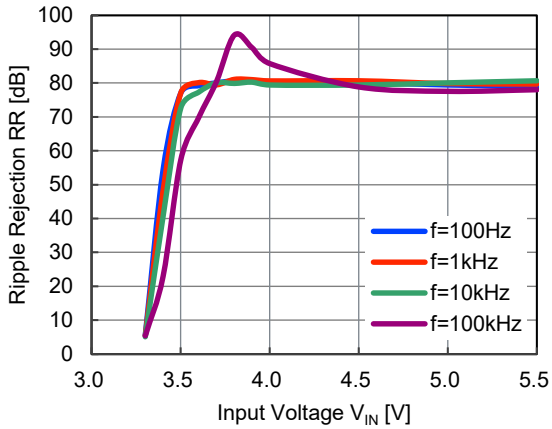

NR1640DC330x, $I_{OUT}$ = 50 mA

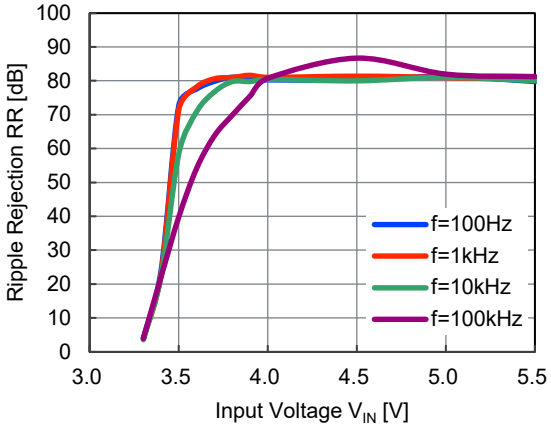


NR1640DC330x, $I_{OUT}$ = 100 mA

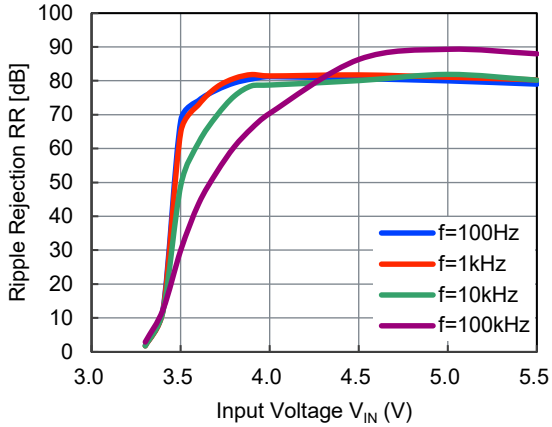


NR1640DC480x, $I_{OUT}$ = 1 mA

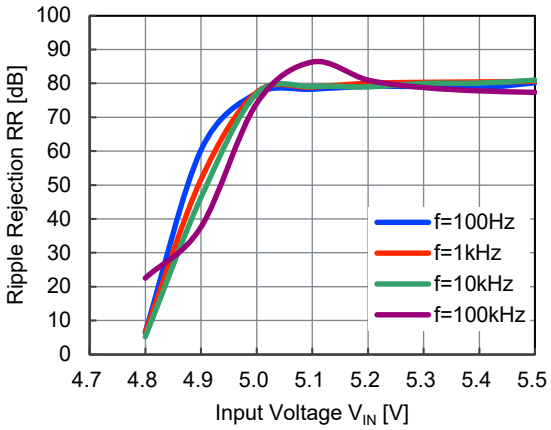


NR1640DC480x, $I_{OUT}$ = 10 mA

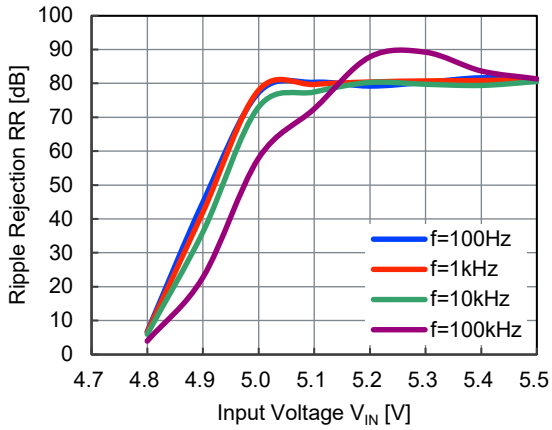


NR1640DC480x, $I_{OUT}$ = 50 mA

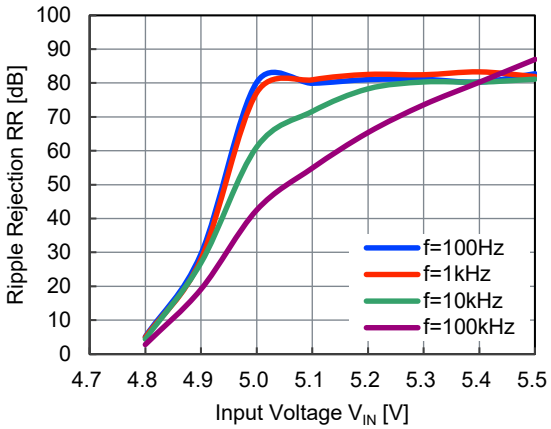


NR1640DC480x, $I_{OUT}$ = 100 mA

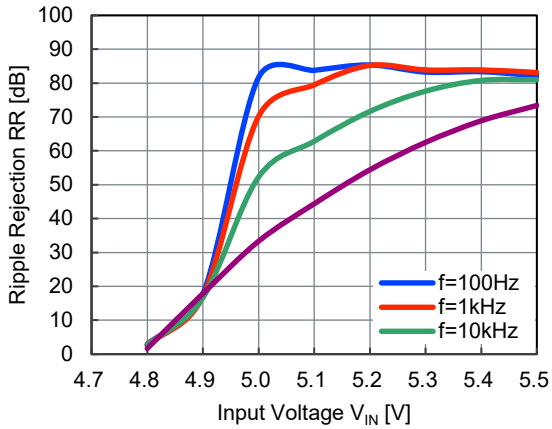

11) Output Noise Spectral Density vs Frequency
$V_{IN}$ = $V_{SET}$ + 1 V (Max = 5.5 V), $C_{IN}$ = $C_{OUT}$ = 1.0 µF, $T_a$ = 25°C

NR1640DC250x

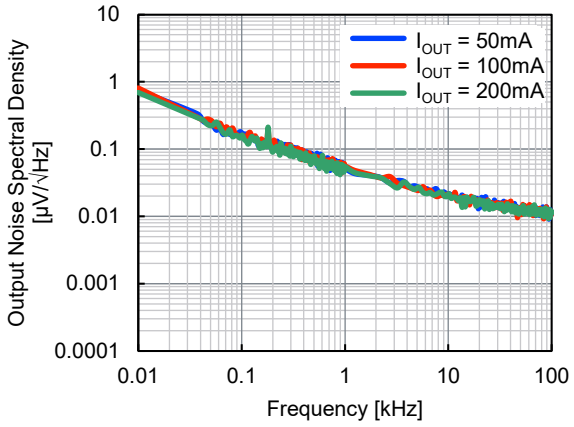


NR1640DC290x

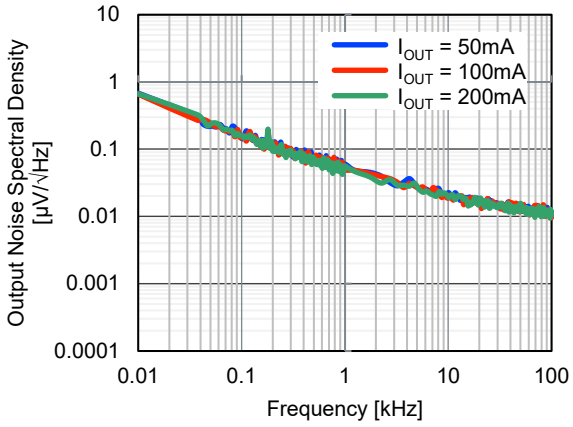


NR1640DC330x

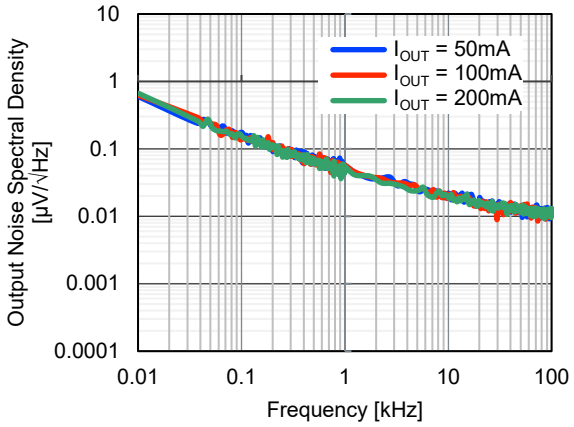


NR1640DC480x

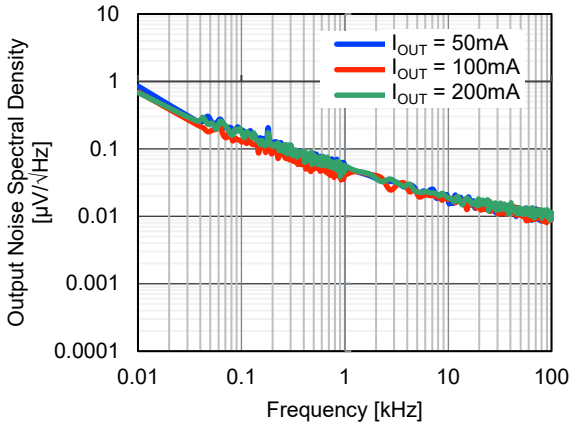


12) Input Transient Response
$I_{OUT}$ = 1 mA, tr = tf = 5 µs, $C_{IN}$ = $C_{OUT}$ = 1.0 µF, $T_a$ = 25°C

NR1640DC250x

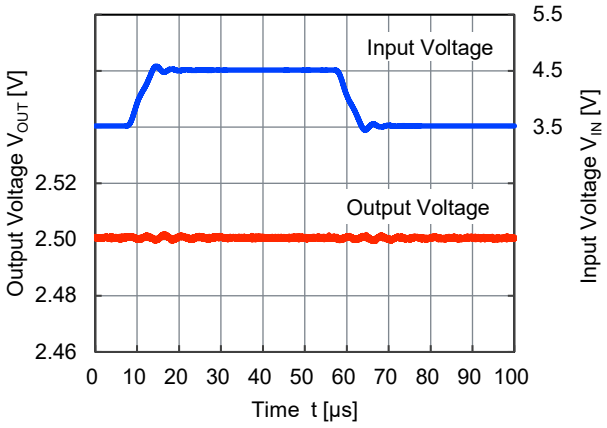


NR1640DC330x

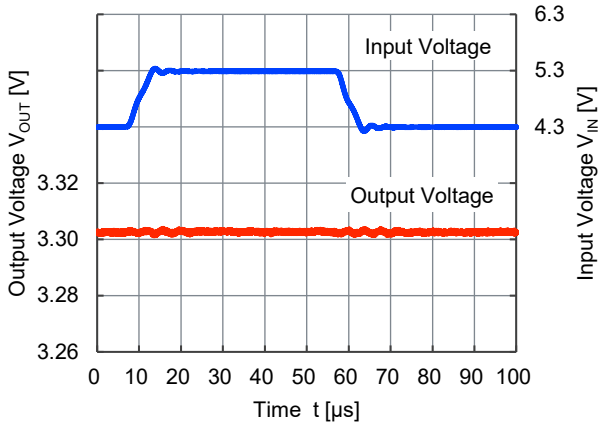

13) Load Transient Response

$V_{IN}$ = $V_{SET}$ + 1 V (Max = 5.5 V), tr = tf = 0.5 µs, $C_{IN}$ = 1.0 µF, $T_a$ = 25°C

NR1640DC250x

$C_{OUT}$ =1.0 µF, $I_{OUT}$ = 1 mA⇔100 mA

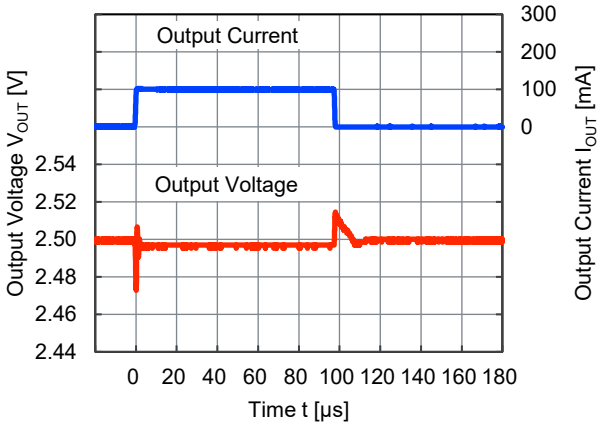


$C_{OUT}$ =10 µF, $I_{OUT}$ = 1 mA⇔100 mA

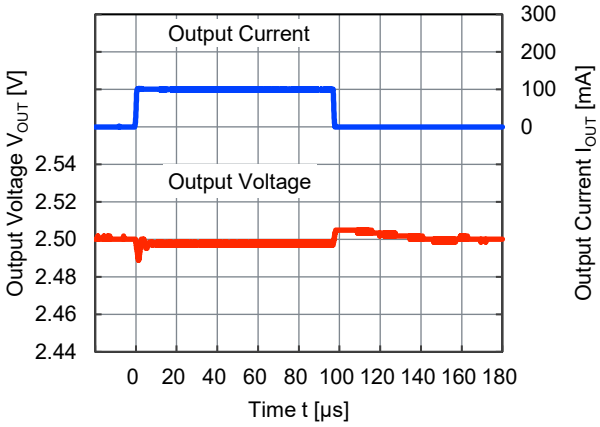


$C_{OUT}$ =1.0 µF, $I_{OUT}$ = 1 mA⇔200 mA

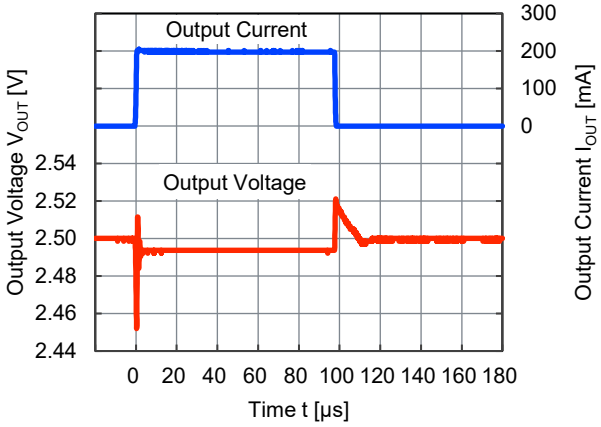


$C_{OUT}$ =10 µF, $I_{OUT}$ = 1 mA⇔200 mA

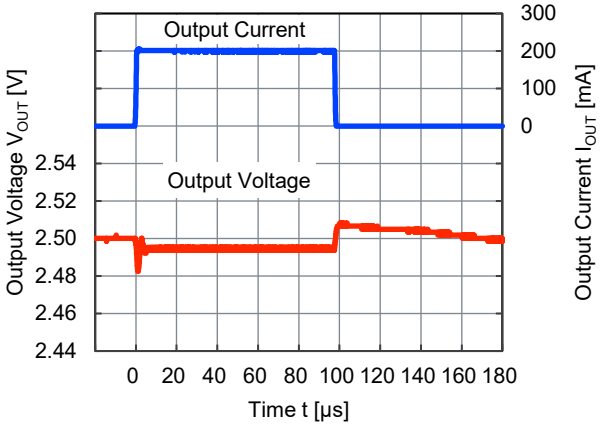


NR1640DC290x

$C_{OUT}$ =1.0 µF, $I_{OUT}$ = 1 mA⇔100 mA

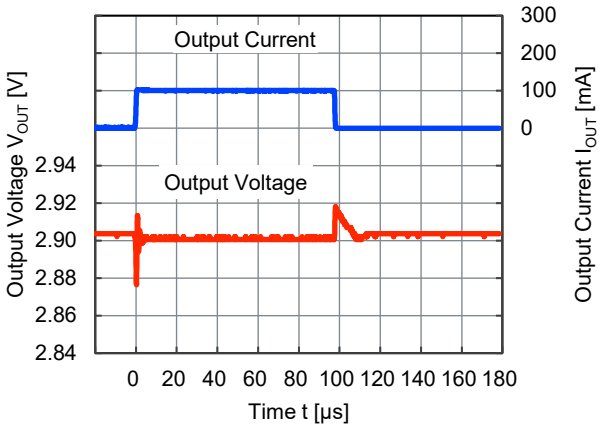


$C_{OUT}$ =10 µF, $I_{OUT}$ = 1 mA⇔100 mA

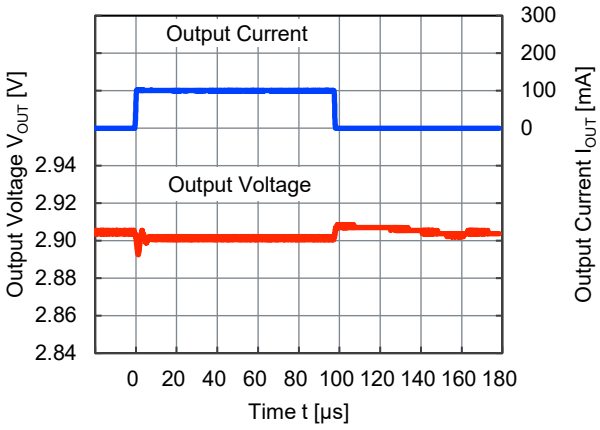

$C_{OUT}$ =1.0 µF, $I_{OUT}$ = 1 mA⇔200 mA

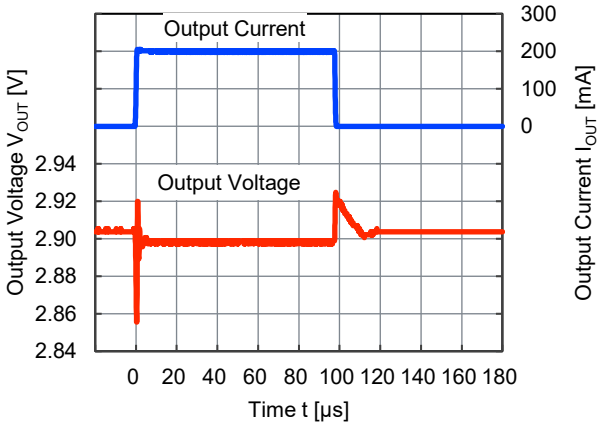


$C_{OUT}$ =10 µF, $I_{OUT}$ = 1 mA⇔200 mA

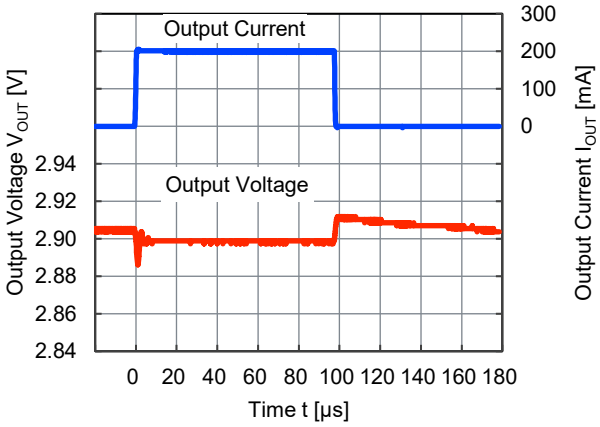


NR1640DC330x

$C_{OUT}$ = 1.0 µF, $I_{OUT}$ = 1 mA⇔100 mA

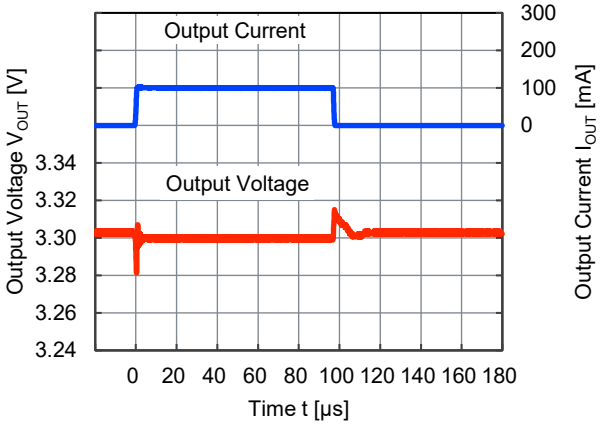


$C_{OUT}$ =10 µF, $I_{OUT}$ = 1 mA⇔100 mA

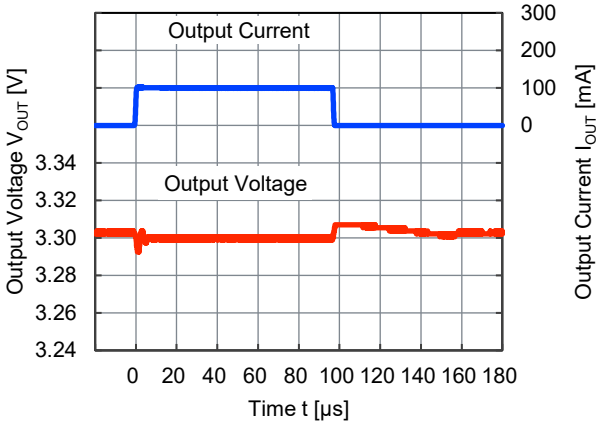


$C_{OUT}$ = 1.0 µF, $I_{OUT}$ = 1 mA⇔200 mA

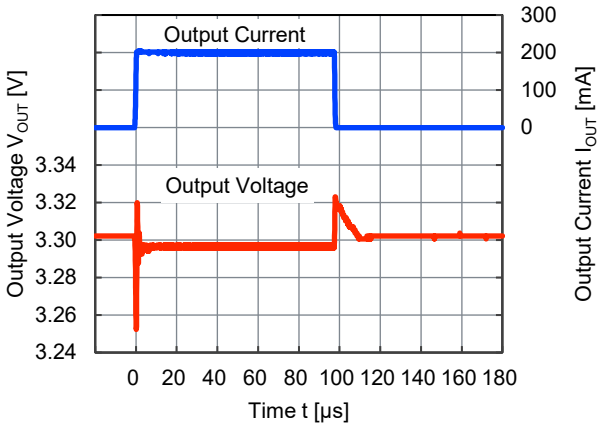


$C_{OUT}$ = 10 µF, $I_{OUT}$ = 1 mA⇔200 mA

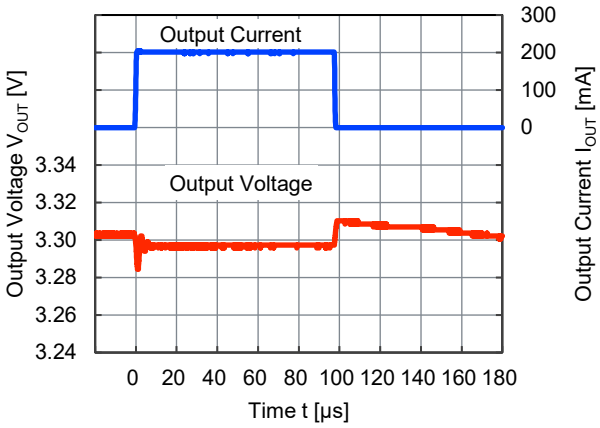

NR1640DC480x

$C_{OUT}$ = 1.0 µF, $I_{OUT}$ = 1 mA⇔100 mA

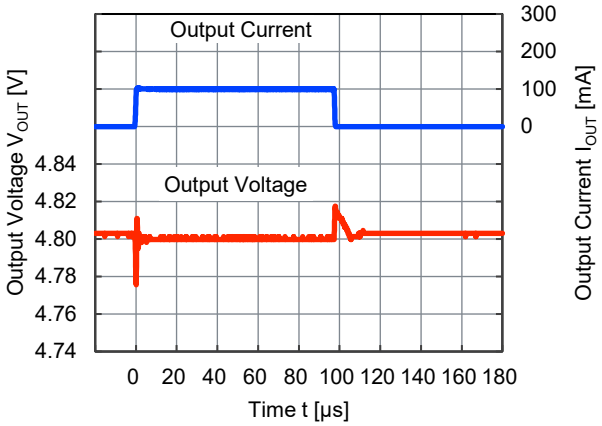


$C_{OUT}$ = 10 µF, $I_{OUT}$ = 1 mA⇔100 mA

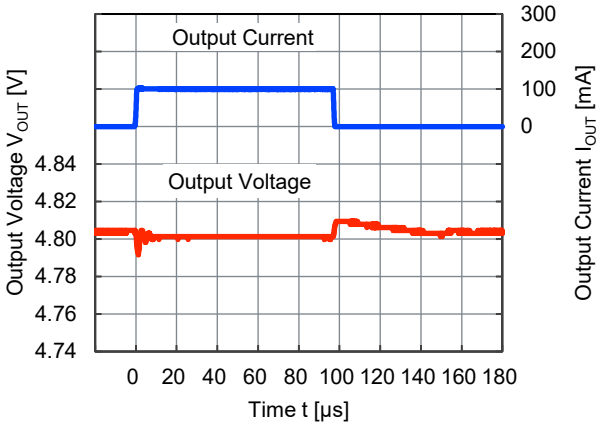


$C_{OUT}$ = 1.0 µF, $I_{OUT}$ = 1 mA⇔200 mA

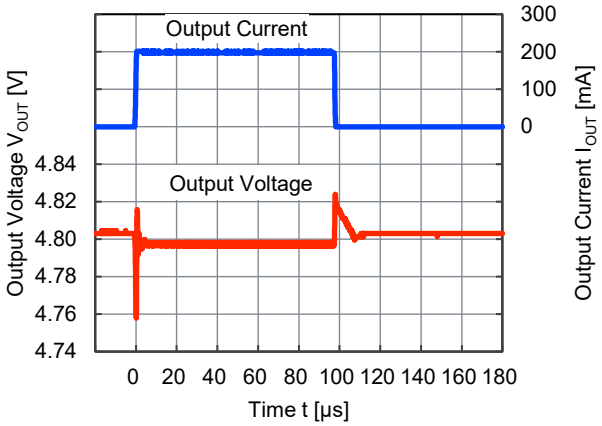


$C_{OUT}$ = 10 µF, $I_{OUT}$ = 1 mA⇔200 mA

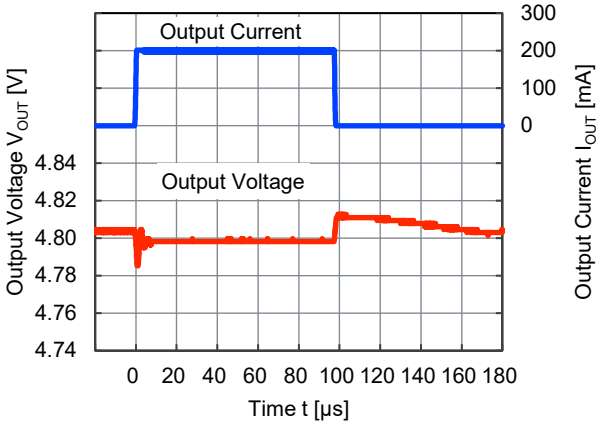


14) Turn on Speed with EN Pin

$V_{IN}$ = $V_{SET}$ + 1 V (Max = 5.5 V), $C_{IN}$ = $C_{OUT}$ = 1.0 µF, $T_a$ = 25°C

NR1640DC250A/E

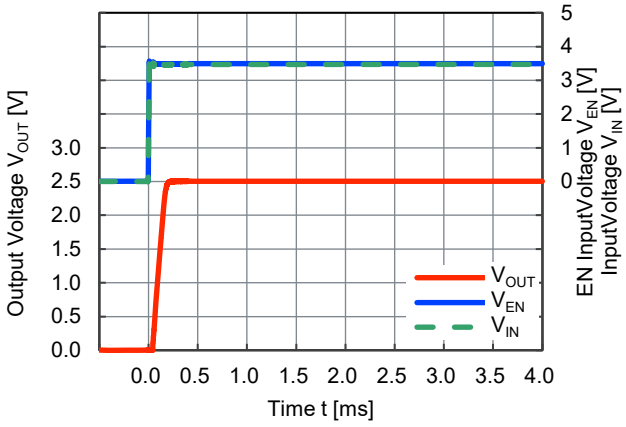


NR1640DC330A/E

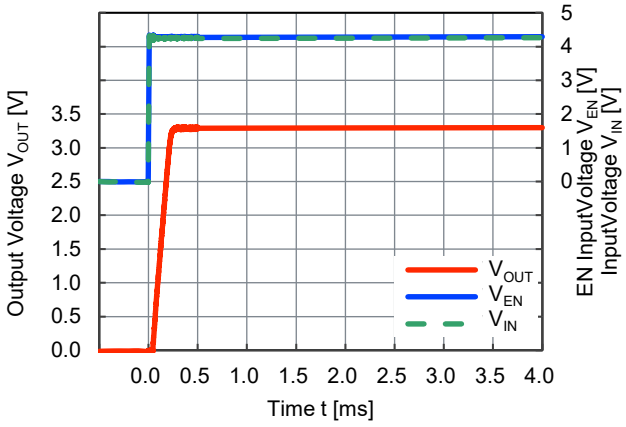

NR1640DC480D/H

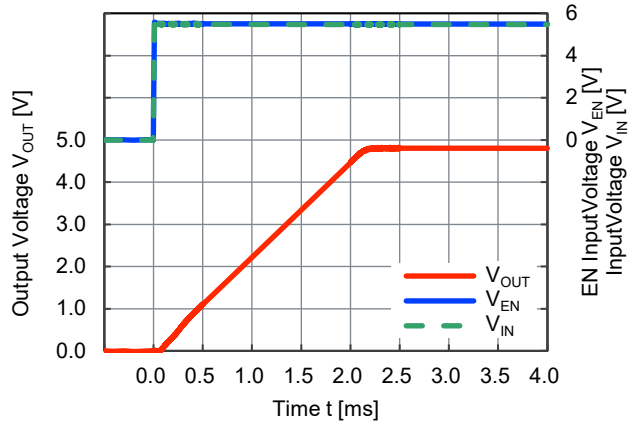


15) Inrush Current vs Ouput Capacitor

$V_{IN}$ = $V_{SET}$ + 1 V (Max = 5.5 V), $C_{IN}$ = $C_{OUT}$ = 1.0 µF, $T_a$ = 25°C

NR1640DC250A/E

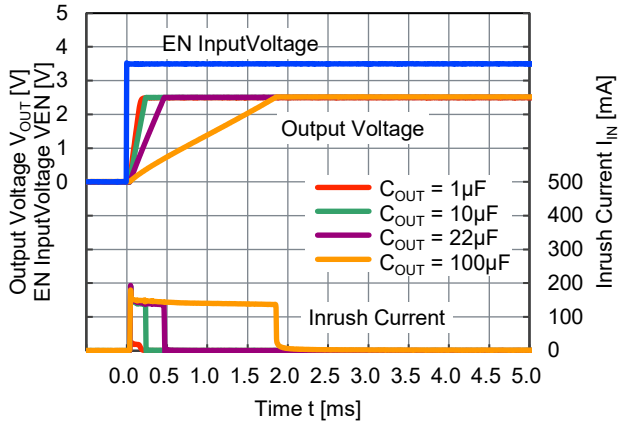


NR1640DC330A/E

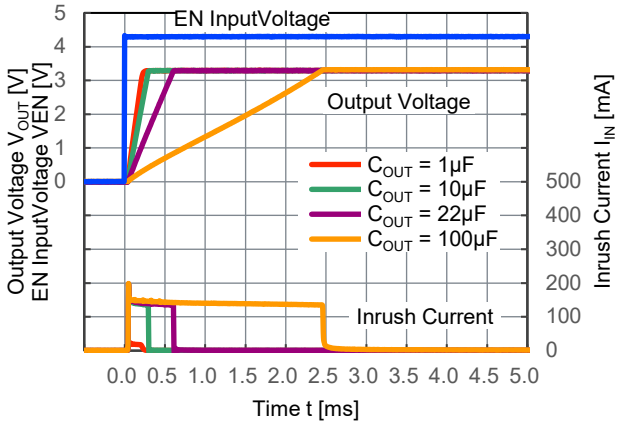


NR1640DC480D/H

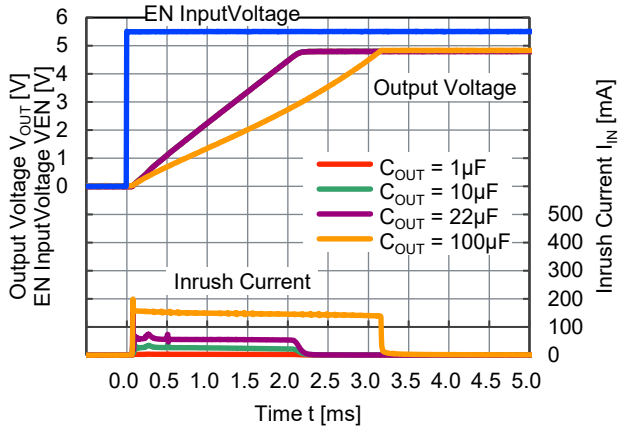

16) Turn off Speed with EN Pin

$V_{IN}$ = $V_{SET}$ + 1 V (Max = 5.5 V), $C_{IN}$ = $C_{OUT}$ = 1.0 µF, $T_a$ = 25°C

NR1640DC250A/E

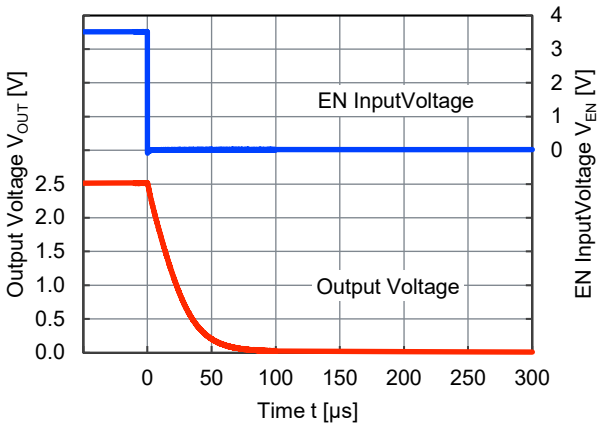


NR1640DC330A/E

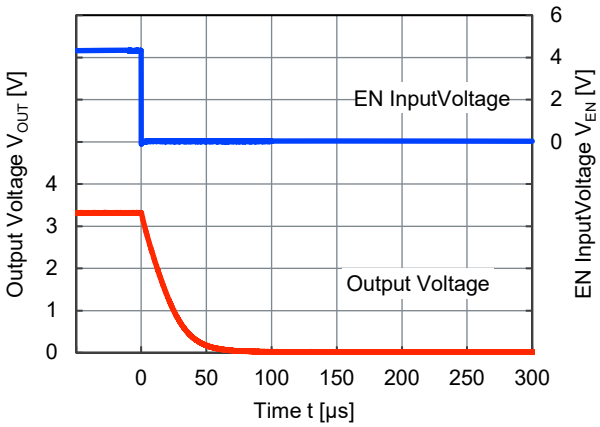


NR1640DC480D/H

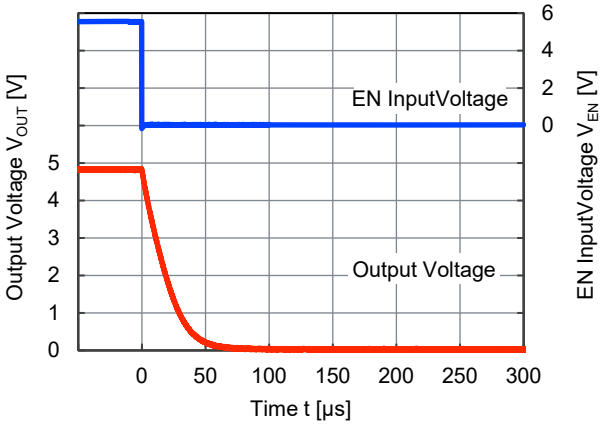


17) Soft start time

$V_{IN}$ = $V_{SET}$ + 1 V (Max = 5.5 V), $C_{IN}$ = $C_{OUT}$ = 1.0 µF, $T_a$ = 25°C

NR1640DC250x

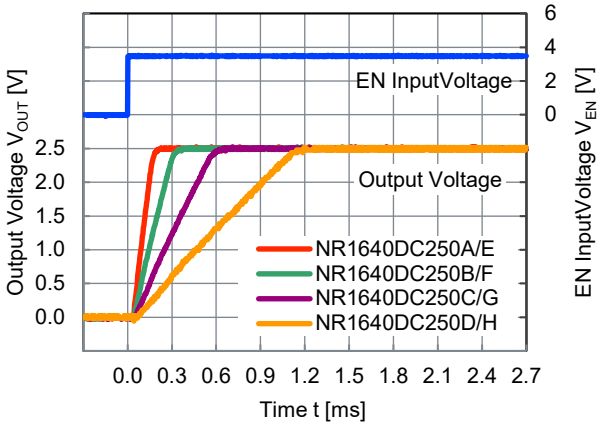


NR1640DC330x

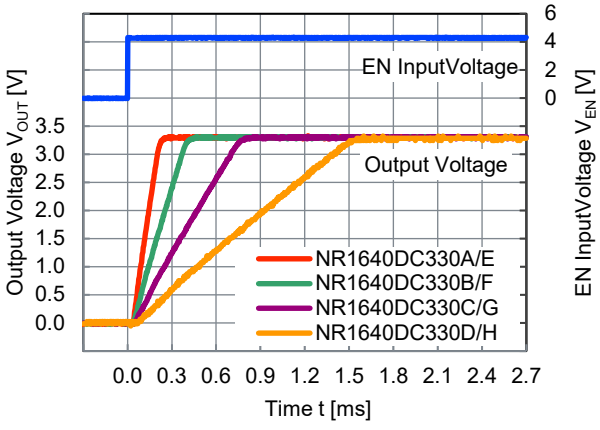

NR1640DC480x

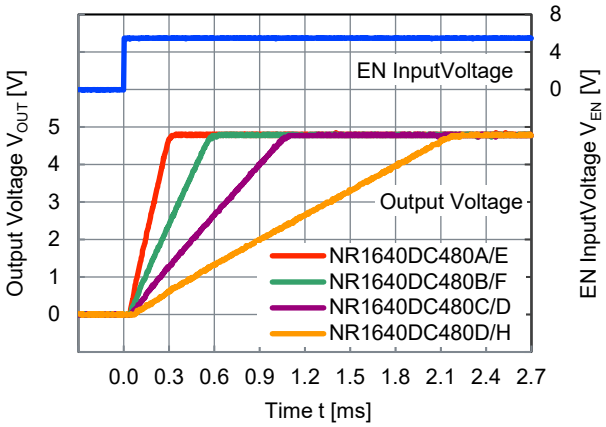

■TEST CIRCUIT

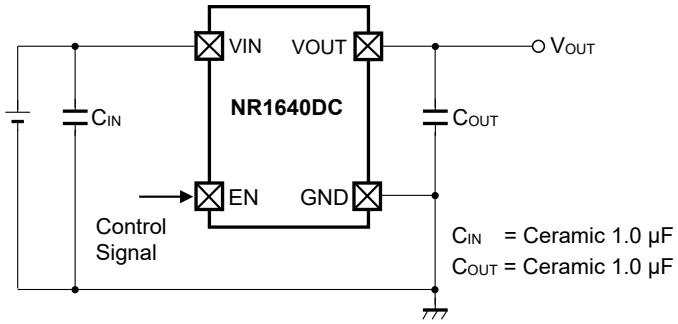


**NR1640DC Test Circuit**

【Components list for our evaluation】

| Symbol | Measurement Item | | Parts Number |
|---|---|---|---|
| $C_{IN}$ | All Items | 1 µF | GCM155C71A105K |
| $C_{OUT}$ | All Items | 1 µF | GCM155C71A105K |
| | No.12,15 | 10 µF | CGA4J1X7S1C106K |
| | No.15 | 22 µF | GCM32ER71A226KE12L |
| | No.15 | 100 µF | GRM32EE70J107ME15L |

# Nisshinbo Micro Devices Inc.

SOT-23-5-DC

PI-SOT-23-5-DC-E-F

## ■ PACKAGE DIMENSIONS

UNIT: mm

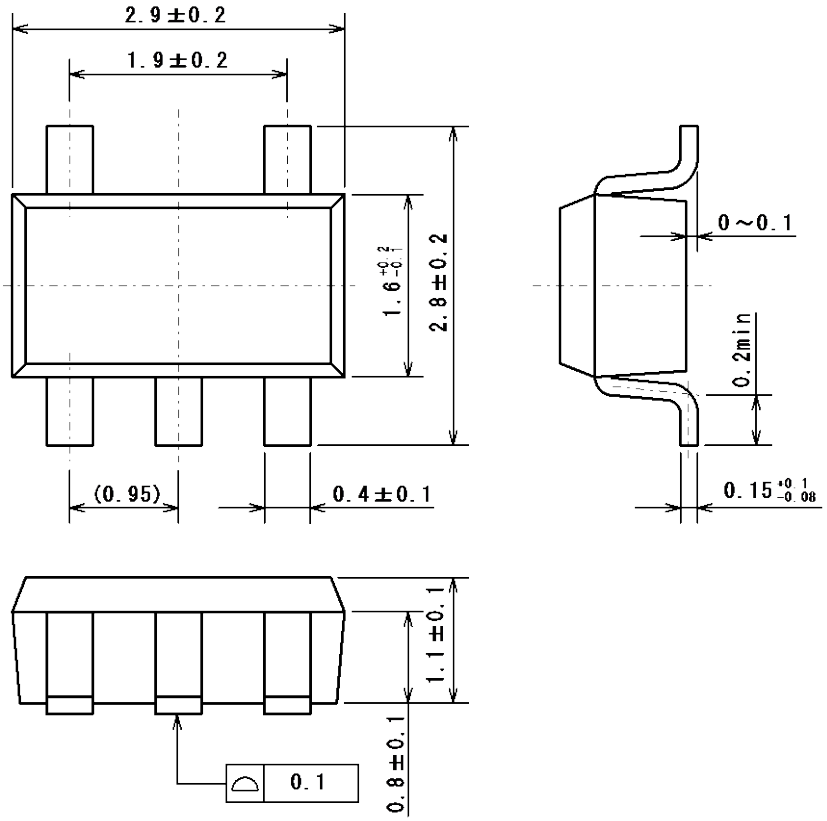


## ■ EXAMPLE OF SOLDER PADS DIMENSIONS

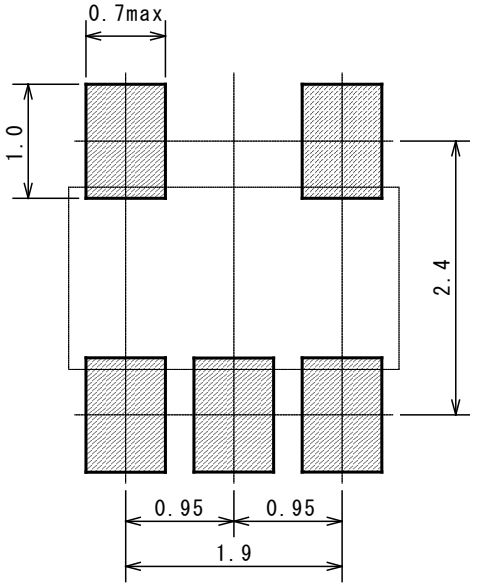

**Nisshinbo Micro Devices Inc.**

SOT-23-5-DC

PI-SOT-23-5-DC-E-F

## ■ PACKING SPEC

UNIT: mm

(1) Taping dimensions / Insert direction

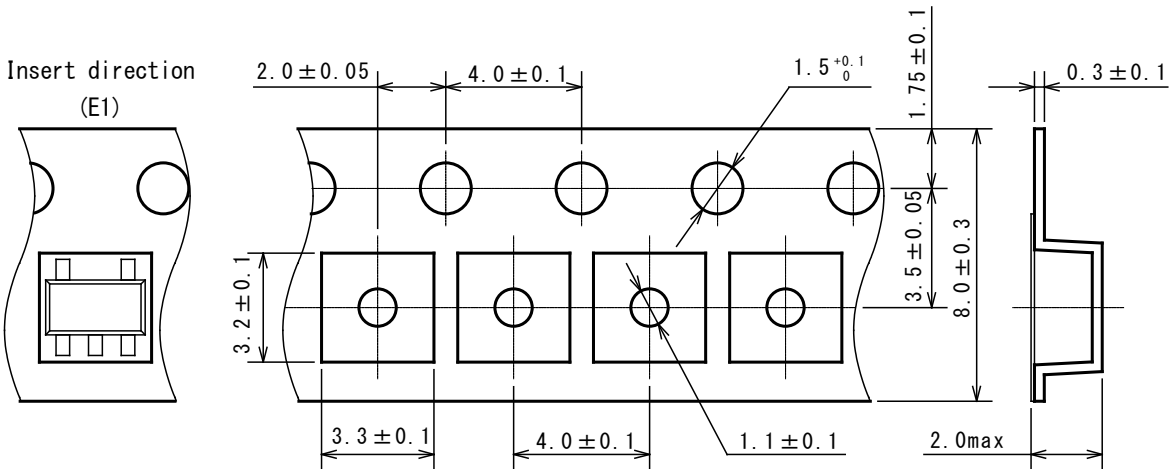


(2) Taping state

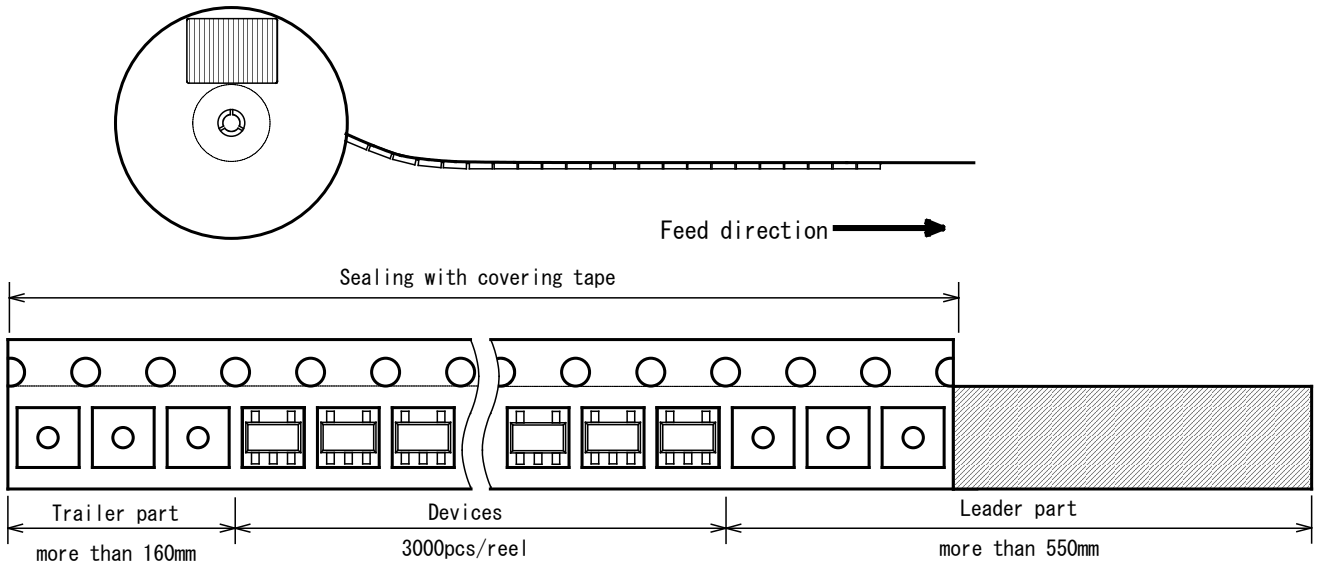

(3) Reel dimensions

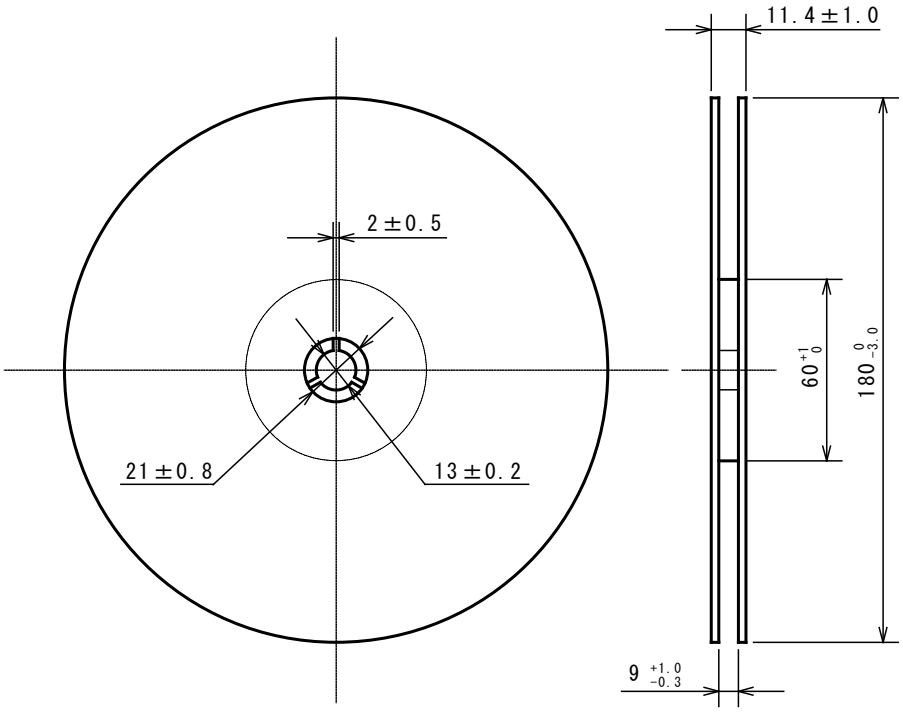


(4) Peeling strength

Peeling strength of cover tape

- Peeling angle 165 to 180° degrees to the taped surface.
- Peeling speed 300mm/min
- Peeling strength 0.1 to 1.0N

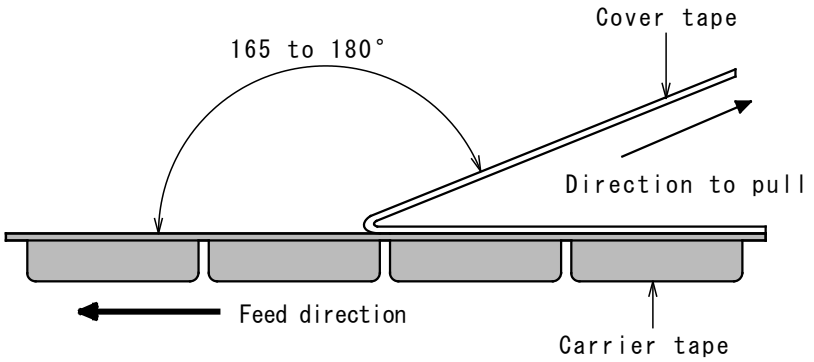

(5) Packing state

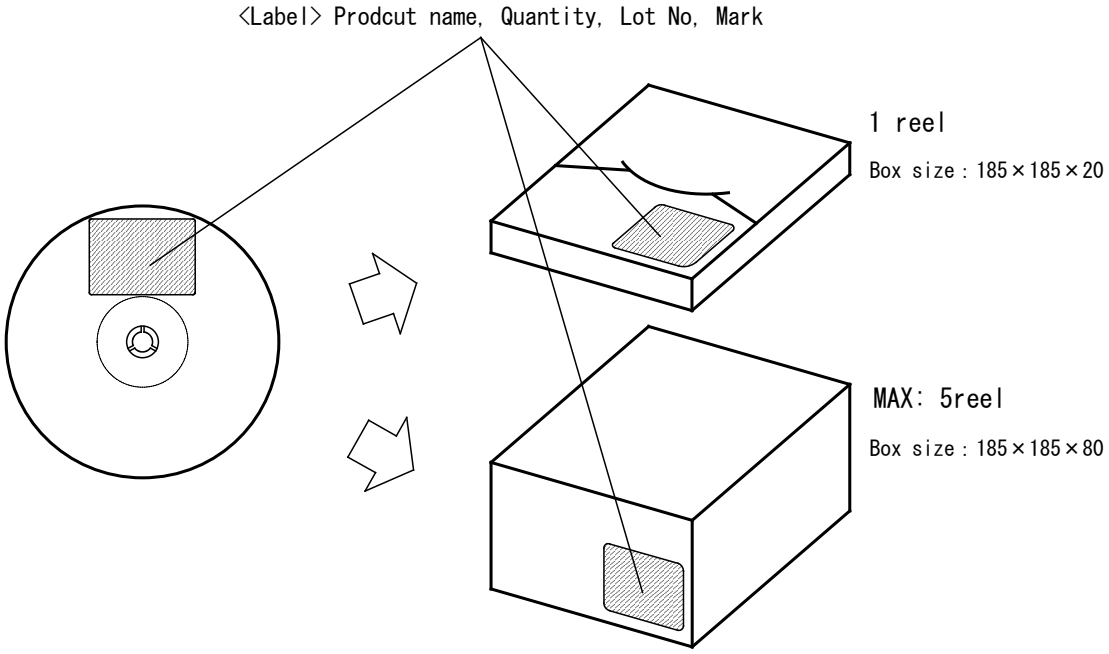


■ **HEAT-RESISTANCE PROFILES**

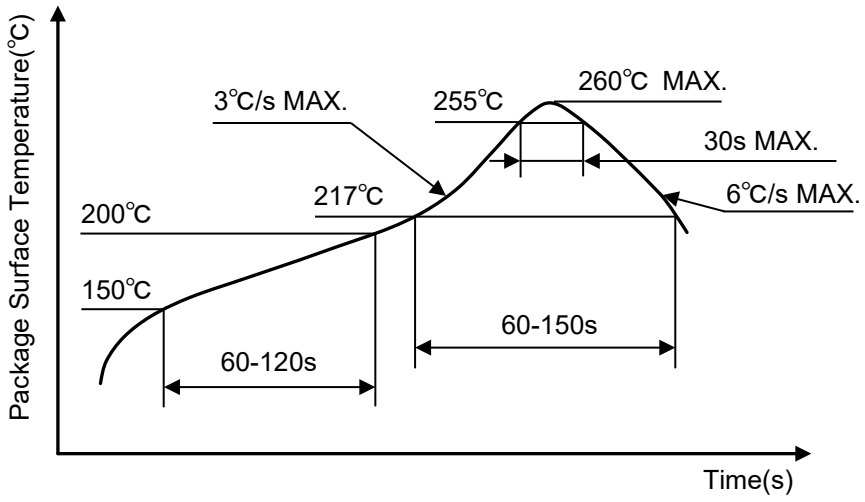


Reflow profile

## ■ Revision History

| Date | Version | Contents of Changes |
|---|---|---|
| Jan. 7. 2022 | 1.0 | Initial release |
| Apr. 28. 2022 | 1.1 | Add NR1640DC290x to the lineup<br><br>ELECTROSTATIC DISCHARGE(ESD) PROTECTION VOLTAGE<br>" Symbol " → " Item " |
| Aug. 18. 2022 | 1.2 | ・WEIGHT (mg) 15 → 13.6<br>・「The following measurement conditions are based on JEDEC STD. 51-7.」<br>→「The following measurement conditions are based on JEDEC STD. 51.」<br>・BLOCK DIAGRAMS → THEORY OF OPERATION<br>・ELECTRICAL CHARACTERISTICS<br>→ PRODUCT-SPECIFIC ELECTRICAL CHARACTERISTICS |
| Jan. 6. 2023 | 1.3 | ・Moved "Marking Specification" from "SOT-23-5-DC Package Information" to previous page of "Order Information".<br>・Updated "SOT-23-5-DC Package Information" to the latest version.<br>(PI-SOT-23-5-DC-E-A → PI-SOT-23-5-DC-E-C) |
| Apr. 7. 2023 | 1.4 | ・Updated "SOT-23-5-DC Package Information" to the latest version.<br>(PI-SOT-23-5-DC-E-C → PI-SOT-23-5-DC-E-D) |
| June 12, 2023 | 1.5 | AEC-Q100 grade 1 Under Evaluation → Compliant |
| Sep. 1. 2023 | 1.6 | ・Updated "SOT-23-5-DC Package Information" to the latest version.<br>(PI-SOT-23-5-DC-E-D → PI-SOT-23-5-DC-E-E) |
| Feb. 2. 2024 | 1.7 | ・Updated "SOT-23-5-DC Package Information" to the latest version.<br>(PI-SOT-23-5-DC-E-E → PI-SOT-23-5-DC-E-F) |

1. The products and the product specifications described in this document are subject to change or discontinuation of production without notice for reasons such as improvement. Therefore, before deciding to use the products, please refer to our sales representatives for the latest information thereon.
2. The materials in this document may not be copied or otherwise reproduced in whole or in part without the prior written consent of us.
3. This product and any technical information relating thereto are subject to complementary export controls (so-called KNOW controls) under the Foreign Exchange and Foreign Trade Law, and related politics ministerial ordinance of the law. (Note that the complementary export controls are inapplicable to any application-specific products, except rockets and pilotless aircraft, that are insusceptible to design or program changes.) Accordingly, when exporting or carrying abroad this product, follow the Foreign Exchange and Foreign Trade Control Law and its related regulations with respect to the complementary export controls.
4. The technical information described in this document shows typical characteristics and example application circuits for the products. The release of such information is not to be construed as a warranty of or a grant of license under our or any third party's intellectual property rights or any other rights.
5. The products listed in this document are intended and designed for automotive applications. Those customers intending to use a product in an application requiring extreme quality and reliability, for example, in a highly specific application where the failure or misoperation of the product could result in human injury or death should first contact us.
    - Aerospace Equipment
    - Equipment Used in the Deep Sea
    - Power Generator Control Equipment (nuclear, steam, hydraulic, etc.)
    - Life Maintenance Medical Equipment
    - Fire Alarms / Intruder Detectors
    - Vehicle Control Equipment (airplane, railroad, ship, etc.)
    - Various Safety Devices
    - Traffic control system
    - Combustion equipment

    In case your company desires to use this product for any applications other than general electronic equipment mentioned above, make sure to contact our company in advance. Note that the important requirements mentioned in this section are not applicable to cases where operation requirements such as application conditions are confirmed by our company in writing after consultation with your company.
6. We are making our continuous effort to improve the quality and reliability of our products, but semiconductor products are likely to fail with certain probability. In order to prevent any injury to persons or damages to property resulting from such failure, customers should be careful enough to incorporate safety measures in their design, such as redundancy feature, fire containment feature and fail-safe feature. We do not assume any liability or responsibility for any loss or damage arising from misuse or inappropriate use of the products.
7. The products have been designed and tested to function within controlled environmental conditions. Do not use products under conditions that deviate from methods or applications specified in this datasheet. Failure to employ the products in the proper applications can lead to deterioration, destruction or failure of the products. We shall not be responsible for any bodily injury, fires or accident, property damage or any consequential damages resulting from misuse or misapplication of the products.
8. Quality Warranty

    8-1. Quality Warranty Period

    In the case of a product purchased through an authorized distributor or directly from us, the warranty period for this product shall be one (1) year after delivery to your company. For defective products that occurred during this period, we will take the quality warranty measures described in section 8-2. However, if there is an agreement on the warranty period in the basic transaction agreement, quality assurance agreement, delivery specifications, etc., it shall be followed.

    8-2. Quality Warranty Remedies

    When it has been proved defective due to manufacturing factors as a result of defect analysis by us, we will either deliver a substitute for the defective product or refund the purchase price of the defective product.
    Note that such delivery or refund is sole and exclusive remedies to your company for the defective product.

    8-3. Remedies after Quality Warranty Period

    With respect to any defect of this product found after the quality warranty period, the defect will be analyzed by us. On the basis of the defect analysis results, the scope and amounts of damage shall be determined by mutual agreement of both parties. Then we will deal with upper limit in Section 8-2. This provision is not intended to limit any legal rights of your company.
9. Anti-radiation design is not implemented in the products described in this document.
10. The X-ray exposure can influence functions and characteristics of the products. Confirm the product functions and characteristics in the evaluation stage.
11. WLCSP products should be used in light shielded environments. The light exposure can influence functions and characteristics of the products under operation or storage.
12. Warning for handling Gallium and Arsenic (GaAs) products (Applying to GaAs MMIC, Photo Reflector). These products use Gallium (Ga) and Arsenic (As) which are specified as poisonous chemicals by law. For the prevention of a hazard, do not burn, destroy, or process chemically to make them as gas or power. When the product is disposed of, please follow the related regulation and do not mix this with general industrial waste or household waste.
13. Please contact our sales representatives should you have any questions or comments concerning the products or the technical information.

NISSHINBO

**Nisshinbo Micro Devices Inc.**

**Official website**
**https://www.nisshinbo-microdevices.co.jp/en/**

**Purchase information**
**https://www.nisshinbo-microdevices.co.jp/en/buy/**