MODEL: CMM-3424DT-26165-TR | DESCRIPTION: MEMS MICROPHONE

FEATURES

- IPX7 rated
- top port
- digital
- omnidirectional

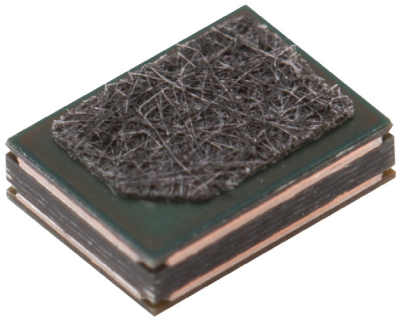

ELECTRICAL

parameter	conditions/description	min	typ	max	units
directivity	omnidirectional				
sensitivity (S)[1]	at 94 dB SPL, 1 kHz	-27	-26	-25	dB FS
supply voltage (V_{DD})[1]		1.6		3.6	V
current consumption (I_{DD})[1, 6]	standard mode low-power mode		600 250	700 300	µA µA
stanby current (ISTANDBY)[5, 6]	F_{CLOCK} < 250 kHz		50		µA
signal to noise ratio (S/N)	at 94 dB SPL, 1 kHz (A-weighted)		65		dBA
total harmonic distortion (THD)	at 115 dB SPL, 1 kHz at 120 dB SPL, 1 kHz			2 10	% %
power supply rejection ratio (PSSR)	200 mVp-p sine wave @ 1 kHz VDD=1.8 V VDD=3.3 V		 65 65		 dB dB
power supply rejection (PSR)	100 mVp-p square wave @ 217 Hz VDD=1.8 V VDD=3.3 V		 -80 -80		 dB FS dB FS
polarity	increasing sound pressure		increasing density of 1's		

DIGITAL INTERFACE

parameter	conditions/description	min	typ	max	units
clock frequency	standard mode low-power mode	1 350		4.8 800	MHz kHz
fall-asleep time[2, 3]	F_{CLOCK} < 1 kHz, V_{DD} = On			10	ms
wake-up time[2, 4]	F_{CLOCK} ≥ 1 MHz, V_{DD} = On			10	ms
data format	1/2 cycle PDM				
short circuit output current (I_{SC})	grounded output pin		1	10	mA
output load (C_{LOAD})				100	pF
logic input high (V_{IH})		0.65xV_{DD}			V
logic input low (V_{IL})				0.35xV_{DD}	V
logic output high (V_{OH})	I_{OUT} = 2 mA			V_{DD}+0.3	V
logic output low (V_{OL})	I_{OUT} = 2 mA	-0.3			V
clock duty cycle		40		60	%
clock rise time	t_{cr}			10	ns
clock fall time	t_{ct}			10	ns
delay time for valid data (t_{dv}) CLK=3.072 MHz oscilloscope	data trans high VDD=1.8 V VDD=3.3 V	 26 20		 82 80	 ns ns
	data trans low VDD=1.8 V VDD=3.3 V	 25 21		 80 81	 ns ns
delay time to for high Z (t_{dz}) CLK=3.072 MHz oscilloscope	data trans high VDD=1.8 V VDD=3.3 V	 0 0		 25 24	 ns ns
	data trans low VDD=1.8 V VDD=3.3 V	 0 0		 26 25	 ns ns
settling time (t_s)	VDD=1.8 V VDD=3.3 V		2.65 2.65	5.5 5.5	ms ms
startup time	powered down => active mode VDD=1.8 V VDD=3.3 V		 2.65 2.45	 5.5 5.3	 ms ms

Notes:
1. 100% tested.
2. Valid microphone states are: Power Down Mode (mic off), Sleep Mode (low current, no output, fast start-up), and Active Mode (normal operation).
3. Time from fclock < 1KHz to sleep current specification is met when transitioning from Active to Sleep Mode.
4. Time from fclock ≥ 1MHz to all applicable specifications when transitioning from Sleep to Active Mode.
5. ΔIDD = 0.5 × VDD × CLOAD × fclock.
6. Specified max values are measured at VDD = +3.6V
7. All specifications measured at 15~25°C, humidity at 60~70%, V_{DD} = 1.8 V, F_{CLOCK} = 3.072 MHz (768 kHz in low-power mode), no load, unless otherwise noted.

TIMING CHARACTERISTICS

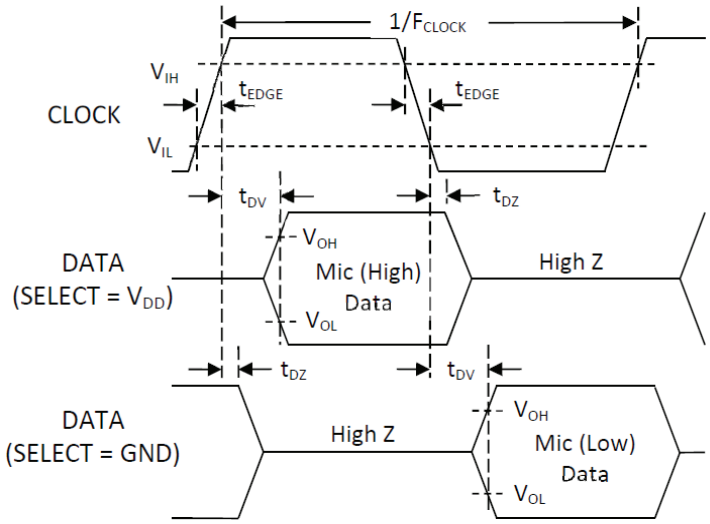

Label	Select	Drives Data After	High-Z After
Data_H	High	rising clock edge	falling clock edge
Data_L	Low(default)	falling clock edge	rising clock edge

RECOMMENDED INTERFACE CIRCUIT

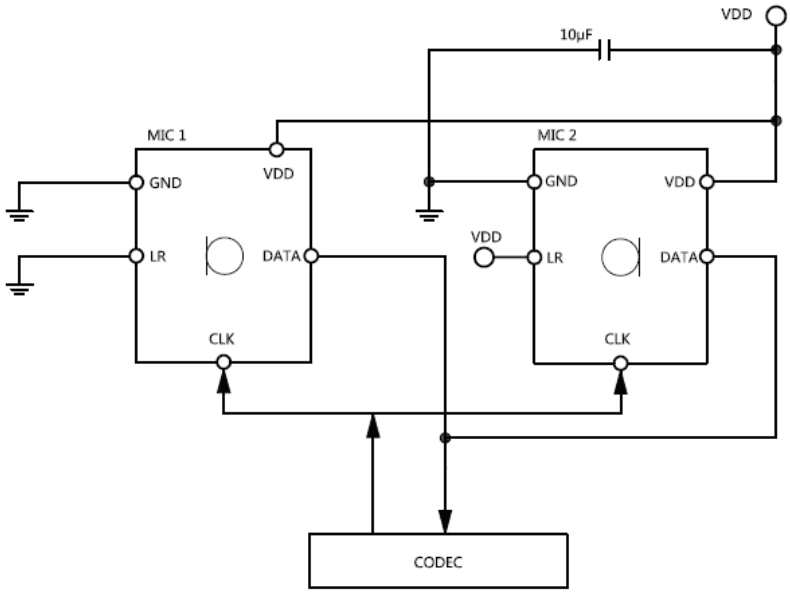

ENVIRONMENTAL

parameter	conditions/description	min	typ	max	units
operating temperature		-40		100	°C
storage temperature	in packaging	-40		100	°C
RoHS	yes				
IP level	IPX7				

MECHANICAL

parameter	conditions/description	min	typ	max	units
dimensions	4.00 x 3.00 x 1.15				mm
acoustic port	top				
terminals	surface mount				
weight			0.03		g

MECHANICAL DRAWING

units: mm
tolerance: ±0.10 mm

TERMINAL CONNECTIONS	
TERM.	FUNCTION
1	VDD
2	select
3	CLOCK
4	DATA
5	GND
6	GND
7	GND
8	GND

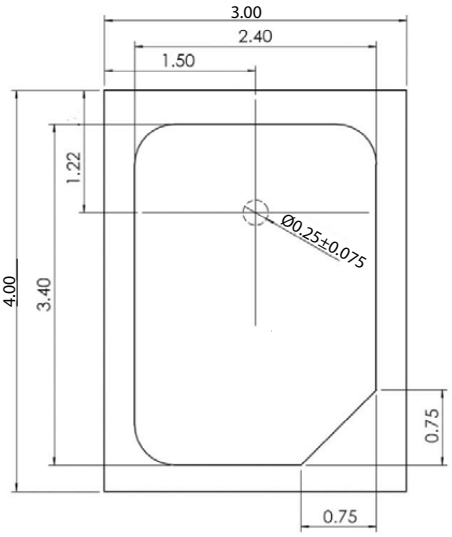

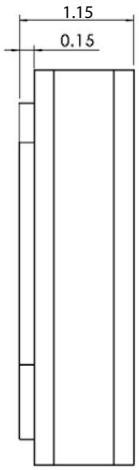

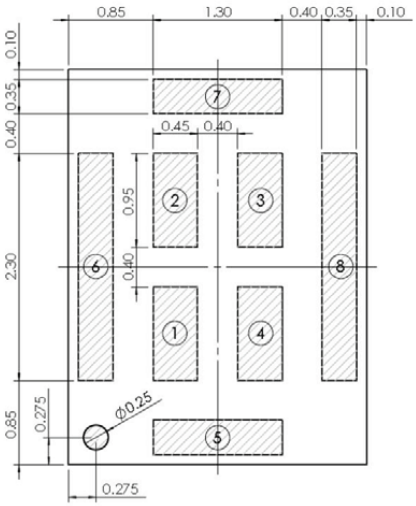

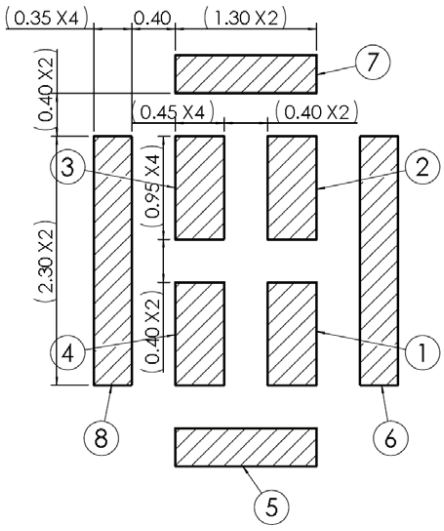

Recommended PCB Layout
Top View

FREQUENCY RESPONSE CURVE

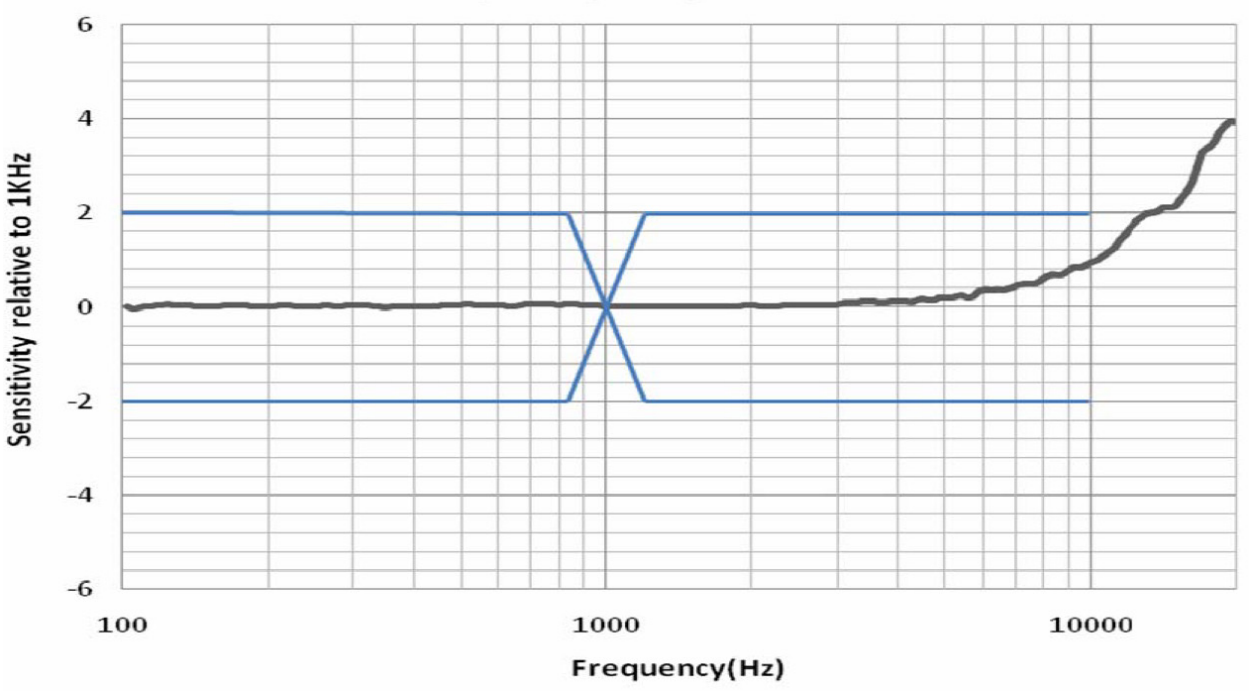

MICROPHONE STATE DIAGRAM

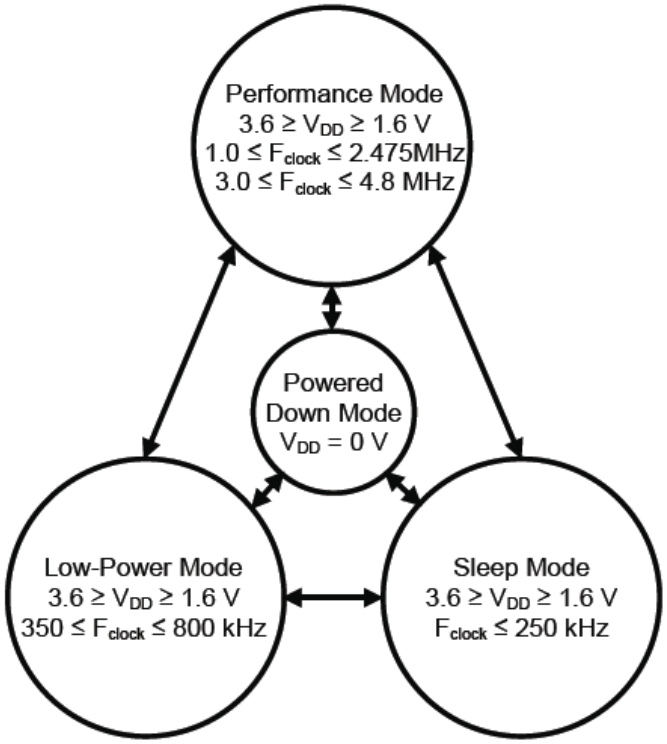

SOLDERABILITY

parameter	conditions/description	min	typ	max	units
reflow soldering[8]	see reflow profile			260	°C

Note: 8. Not recommended to exceed 3 reflow cycles.

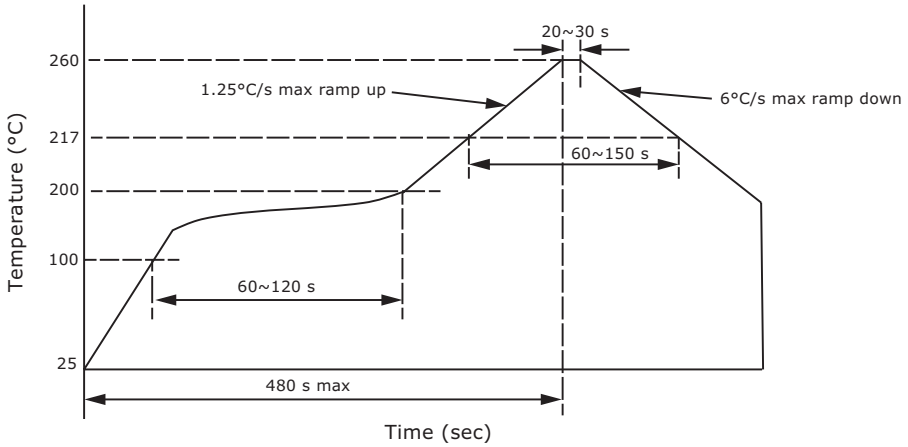

HANDLING RECOMMENDATIONS

1. Not recommended to blow air heavily over acoustic port as debris could impact mic function.
2. Not suitable for wash process after reflow.
3. Not recommended to brush board with or without solvents after reflow process.
4. Not recommended to directly expose to ultrasonic processing or cleaning.
5. Not recommended to inserty any object in port of device at any time.
6. Not recommended to apply over 30 psi of air pressure into the port hole.
7. Not recommended to pull a vacuum over port hole.
8. Not recommended to apply a vacuum when repackaging into sealed bag a rate faster than 0.5 atm/sec.
9. Not recommended to clean table or carried plate with air guarding system that could induce particle floating inside mic.

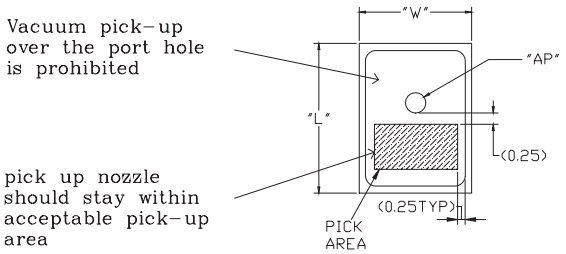

Recommended Vacuum Nozzle Pickup
Top View

PACKAGING

parameter	conditions/description	min	typ	max	units
MSL	Class 1				
reel size	Ø330 mm				
reel QTY	5,200 pcs per reel				
carton size	350 x 175 x 355 mm				
carton QTY	26,000 pcs				

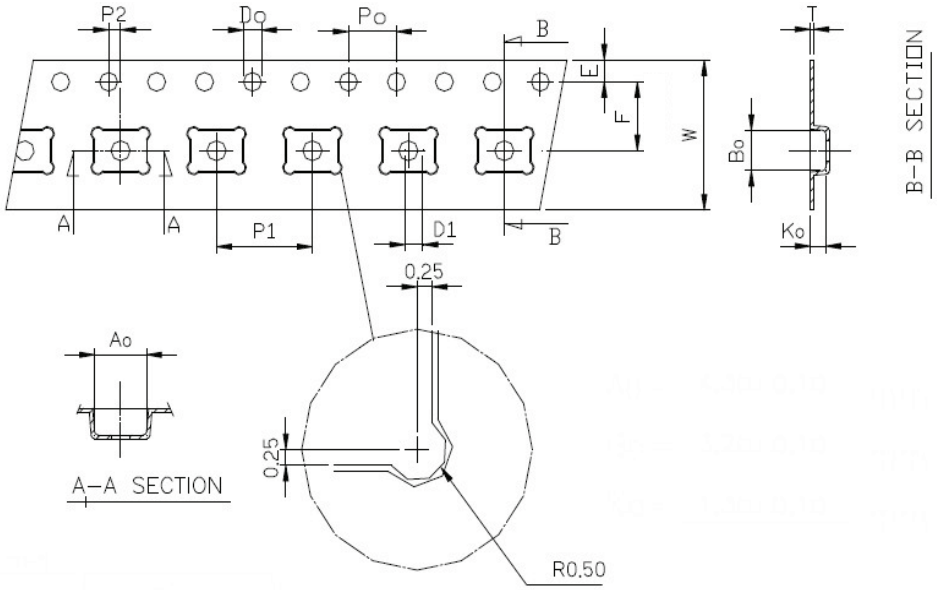

Item	W	E	F	ØDO	D1	Ao	Ko
DIM(mm)	12.0±0.30	1.75±0.10	5.50±0.10	1.55±0.05	1.50 (min)	4.30±0.10	1.30±0.10
Item	PO	10PO	P1	P2	T	Bo	--
DIM(mm)	4.0±0.10	40.0±0.10	8.0±0.10	1.0±0.10	0.30±0.05	3.20±0.10	--

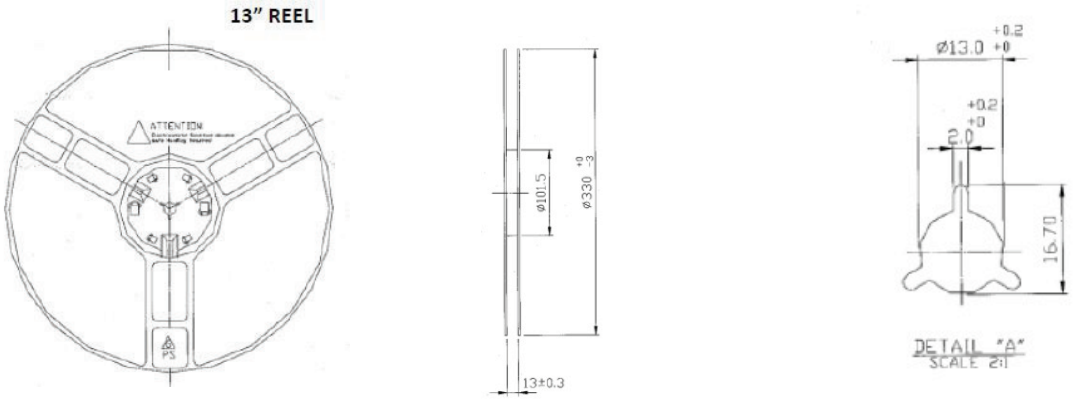

REVISION HISTORY

rev.	description	date
1.0	initial release	05/17/2023

The revision history provided is for informational purposes only and is believed to be accurate.

CUI Devices offers a one (1) year limited warranty. Complete warranty information is listed on our website.

CUI Devices reserves the right to make changes to the product at any time without notice. Information provided by CUI Devices is believed to be accurate and reliable. However, no responsibility is assumed by CUI Devices for its use, nor for any infringements of patents or other rights of third parties which may result from its use.

CUI Devices products are not authorized or warranted for use as critical components in equipment that requires an extremely high level of reliability. A critical component is any component of a life support device or system whose failure to perform can be reasonably expected to cause the failure of the life support device or system, or to affect its safety or effectiveness.

cuidevices.com