2432408-8 ✔ ACTIVE

TE Internal #: 2432408-8

TE Internal Description: RPQ-1-25

View on TE.com >

EMI & EMC Solutions > Line Reactors


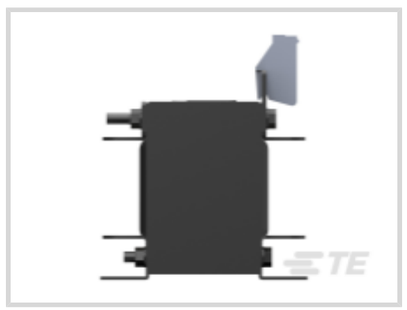

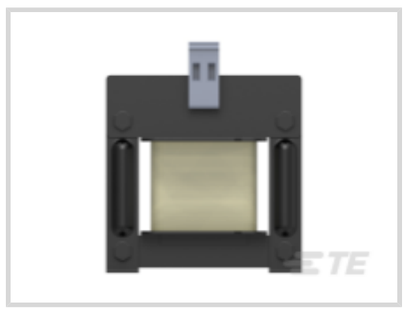


Wiring Configuration: **Single Phase**

Current Rating: **25 A**

Features

Product Type Features

Output Termination Type	Terminal Block
Input Termination Type	Terminal Block

Configuration Features

Wiring Configuration	Single Phase

Electrical Characteristics

Operating Voltage (Max)	250 VAC
%Impedence @ 50Hz and Rated Current	4% @ 230VAC
Power Rating	6.94 hp
Operating Voltage	230 VAC
Current Rating	25 A

Mechanical Attachment

Product Mount Type	Chassis

Product Compliance

For compliance documentation, visit the product page on TE.com>

EU RoHS Directive 2011/65/EU	Compliant
EU ELV Directive 2000/53/EC	Not Yet Reviewed
China RoHS 2 Directive MIIT Order No 32, 2016	No Restricted Materials Above Threshold

EU REACH Regulation (EC) No. 1907/2006	Current ECHA Candidate List: JAN 2024 (240) Candidate List Declared Against: JUNE 2023 (235) Does not contain REACH SVHC
Halogen Content	Low Halogen - Br, Cl, F, I < 900 ppm per homogenous material. Also BFR/CFR/PVC Free
Solder Process Capability	Not reviewed for solder process capability

Product Compliance Disclaimer

This information is provided based on reasonable inquiry of our suppliers and represents our current actual knowledge based on the information they provided. This information is subject to change. The part numbers that TE has identified as EU RoHS compliant have a maximum concentration of 0.1% by weight in homogenous materials for lead, hexavalent chromium, mercury, PBB, PBDE, DBP, BBP, DEHP, DIBP, and 0.01% for cadmium, or qualify for an exemption to these limits as defined in the Annexes of Directive 2011/65/EU (RoHS2). Finished electrical and electronic equipment products will be CE marked as required by Directive 2011/65/EU. Components may not be CE marked.Additionally, the part numbers that TE has identified as EU ELV compliant have a maximum concentration of 0.1% by weight in homogenous materials for lead, hexavalent chromium, and mercury, and 0.01% for cadmium, or qualify for an exemption to these limits as defined in the Annexes of Directive 2000/53/EC (ELV). Regarding the REACH Regulations, TE's information on SVHC in articles for this part number is still based on the European Chemical Agency (ECHA) 'Guidance on requirements for substances in articles'(Version: 2, April 2011), applying the 0.1% weight on weight concentration threshold at the finished product level. TE is aware of the European Court of Justice ruling of September 10th, 2015 also known as O5A (Once An Article Always An Article) stating that, in case of 'complex object', the threshold for a SVHC must be applied to both the product as a whole and simultaneously to each of the articles forming part of its composition. TE has evaluated this ruling based on the new ECHA "Guidance on requirements for substances in articles" (June 2017, version 4.0) and will be updating its statements accordingly.

Compatible Parts

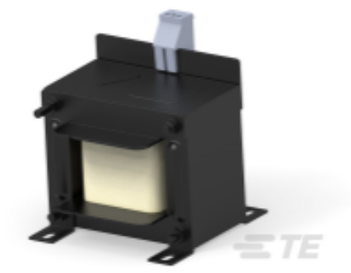

TE Part # 2432408-9
RPQ-1-30



TE Part # 2432408-7
RPQ-1-20

Documents

Product Drawings

RPQ-1-25

English

CAD Files

Customer View Model

ENG_CVM_CVM_2432408-8_A.3d_igs.zip

English

Customer View Model

ENG_CVM_CVM_2432408-8_A.3d_stp.zip

English

Customer View Model

ENG_CVM_CVM_2432408-8_A.2d_dxf.zip

English

3D PDF

3D

By downloading the CAD file I accept and agree to the Terms and Conditionsof use.

Datasheets & Catalog Pages

2450027-1_Single Line AC Reactor_STD

English