Floyd Bell Inc
SOUND SOLUTIONS

Twin Turbo Series
TLHS-V88G-930-S



More Information

RoHS Rohs Compliant

Specifications

Mounting	Panel Mount with Volume Control
Color	Green
Operating Mode	Siren Tone
Operating Voltage	9-30 Vdc
Operating Frequency	3000±250 Hz
Typical Operating Current	110 mA at 9 Vdc 50 mA at 30 Vdc
Typical Sound Pressure	85 ±5 dB(A) at 9 Vdc at 24 inches (61 cm), at 25°C 103 ±5 dB(A) at 30 Vdc at 24 inches (61 cm), at 25°C
Termination	Quick Connect Blades with Screws
Termination Strength	Pull test with a maximum of 22 pounds (10 kg) load
Operating Temperature	-20_C to +65_C
Storage Temperature	-40_C to +85_C
Surge Voltage	20% over maximum rated voltage for less than 5 minutes
Reverse Voltage Protection	To the maximum operating voltage
Construction Materials	Lens/Case- Green Translucent Polycarbonate 94 VO Potting- 2 parts epoxy resin or silicone, black
Gasket	Gasket (Included) 0.125" thick, 60 Durometer Neoprene
Construction Materials	ASTM B117 Certified - Withstands exposure to salt spray for 300 hours IP 68 Certified - Withstands water submergence and dust exposure Humidity- 95% relative humidity at +40_C continuously for 100 hours. Vibration- Withstands vibration between 0 and 55 Hz. on all axes.
Life Expectancy	10 years under normal operating conditions.
Warranty	For a period of two years from the date of manufacture under normal operating conditions.
Notes	This product is not intended as a life safety device.
Terms and Conditions of Sale	Link here

Dimensions

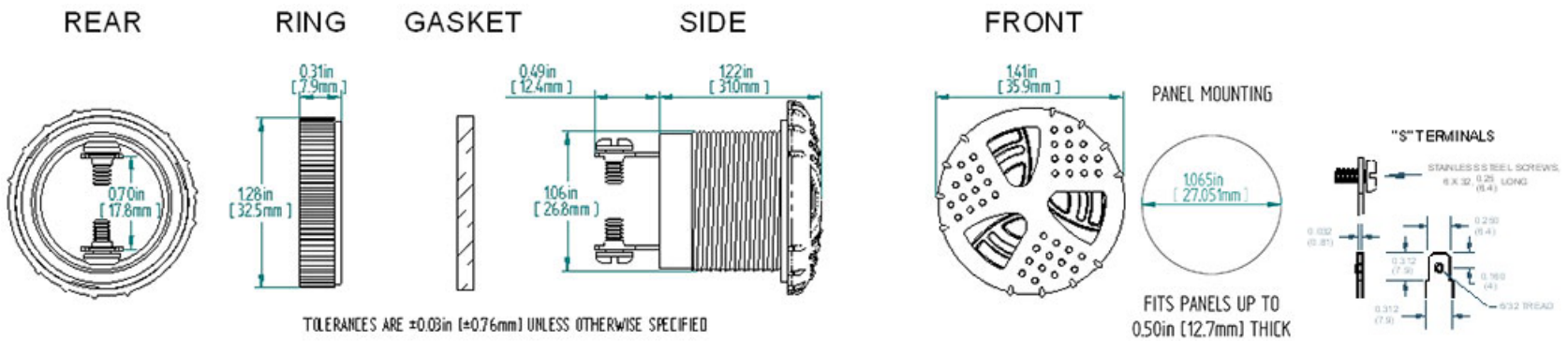
REAR
RING
GASKET
SIDE
FRONT
0.70in [17.8mm]
0.31in [7.9mm]
1.28in [32.5mm]
0.49in [12.4mm]
1.22in [31.0mm]
1.06in [26.8mm]
1.41in [35.9mm]
PANEL MOUNTING
1.065in [27.051mm]
FITS PANELS UP TO 0.50in [12.7mm] THICK
"S" TERMINALS
TOLERANCES ARE ±0.03in [±0.76mm] UNLESS OTHERWISE SPECIFIED