ELECTRONICS, INC.
44 FARRAND STREET
BLOOMFIELD, NJ 07003
(973) 748–5089
http://www.nteinc.com

NTE7407
Integrated Circuit
TTL – Hex Buffer/Driver
with Open Collector High Voltage Outputs

Description:

The NTE7407 is a hex buffer/driver in a 14–Lead plastic DIP type package that features high voltage open collector outputs to interface with high level circuits (such as MOS), or for driving high current loads, and also is characterized for use as a buffer for driving TTL inputs.

This device is compatible with most TTL families. Inputs are diode–clamped to minimize transmission effects, which simplifies design. Typical power dissipation is 140mW, and average propagation delay time is 12ns.

Features:

- Converts TTL Voltage Levels to MOS Levels
- High Sink–Current Capability
- Input Clamping Diodes Simplify System Design
- Open–Collector Driver for Indicator Lamps and Relays
- Inputs Fully Compatible with Most TTL Circuits

Absolute Maximum Ratings: (Note 1)

Supply Voltage, V_{CC} 7V
DC Input Voltage, V_{IN} 5.5V
Output Voltage (Note 2), V_O 30V
Operating Temperature Range, T_A . . . . . 0°C to +70°C
Storage Temperature Range, T_{stg} . . . . . –65°C to +150°C

Note 1. Unless otherwise specified, all voltages are referenced to GND.
Note 2. This is the maximum voltage that should be applied to any output when it is in the off state.

Recommended Operating Conditions:

Parameter	Symbol	Min	Typ	Max	Unit
Supply Voltage	V_{CC}	4.75	5.0	5.25	V
High–Level Input Voltage	V_{IH}	2.0	–	–	V
Low–Level Input Voltage	V_{IL}	–	–	0.8	V
High–Level Output Voltage	V_{OH}	–	–	30	V
Low–Level Output Current	I_{OL}	–	–	40	mA
Operating Temperature Range	T_A	0	–	+70	°C

Electrical Characteristics: (Note 3, Note 4)

Parameter	Symbol	Test Conditions	Min	Typ	Max	Unit
Input Clamp Voltage	V_{IK}	V_{CC} = MIN, I_I = −12mA	–	–	−1.5	V
High Level Output Current	I_{OH}	V_{CC} = MIN, V_{IL} = 0.8V, V_{OH} = 30V	–	–	0.25	mA
Low Level Output Voltage	V_{OL}	V_{CC} = MIN, V_{IH} = 2V, I_{OL} = 16mA	–	–	0.4	V
		V_{CC} = MIN, V_{IH} = 2V, I_{OL} = 40mA	–	–	0.7	V
Input Current	I_I	V_{CC} = MAX, V_I = 5.5V	–	–	1	mA
High Level Input Current	I_{IH}	V_{CC} = MAX, V_I = 2.4V	–	–	40	μA
Low Level Input Current	I_{IL}	V_{CC} = MAX, V_I = 0.4V	–	–	−1.6	mA
High Level Supply Current	I_{CCH}	V_{CC} = MAX	–	29	41	mA
Low Level Supply Current	I_{CCL}	V_{CC} = MAX	–	21	30	mA

Note 3. .For conditions shown as MIN or MAX, use the appropriate value specified under “Recommended Operation Conditions”.

Note 4. All typical values are at V_{CC} = 5V, T_A = +25°C.

Switching Characteristics: (V_{CC} = 5V, T_A = +25°C unless otherwise specified)

Parameter	Symbol	Test Conditions	Min	Typ	Max	Unit
Propagation Delay Time From A Input to Y Output)	t_{PLH}	R_L = 110Ω, C_L = 15pF	–	6	10	ns
	t_{PHL}		–	20	30	ns

Pin Connection Diagram

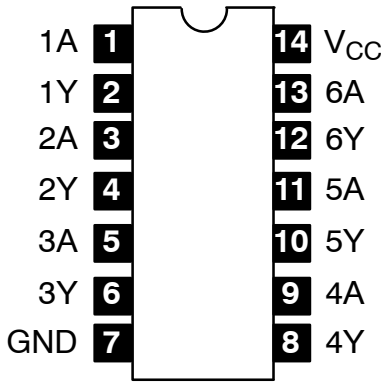

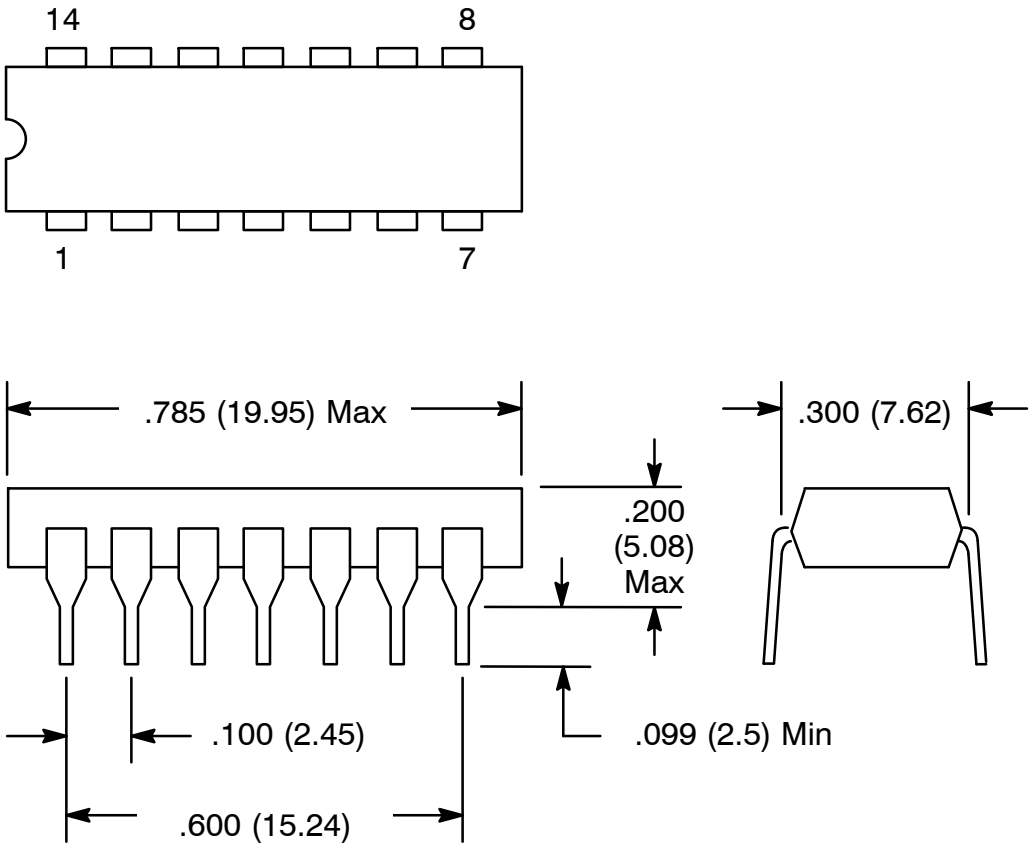
14
8
1
7
.785 (19.95) Max
.300 (7.62)
.200
(5.08)
Max
.100 (2.45)
.099 (2.5) Min
.600 (15.24)