EVQ6628-F-00A

40V, 0.8A, Octal Half-Bridge Motor Driver with Serial Input Control Evaluation Board, AEC-Q100 Qualified

DESCRIPTION

The EVQ6628-F-00A is an evaluation board designed to demonstrate the capabilities of the MPQ6628, a motor driver with serial input control and eight half-bridges. The input voltage (V_{IN}) ranges from 5.5V to 40V, with up to 0.8A of output current (I_{OUT}) capability.

The eight half-bridges can be controlled separately via a standard serial data interface, and have various diagnostic functions, including shorted output, open load, over-temperature (OT), over-voltage (OV), and under-voltage (UV).

The MPQ6628 has a very low quiescent current (I_Q) in standby mode, and requires a minimum number of readily available, standard external components. The MPQ6628 is available in a TSSOP-28EP package, and is AEC-Q100 Grade 1 qualified.

The MPQ6628 is suitable for motor drivers, telecommunication half-bridge power supplies, and avionics DC/DC converters.

PERFORMANCE SUMMARY

Specifications are at T_A = 25°C, unless otherwise noted.

Parameters	Conditions	Value
Input power supply voltage (V_S) range		5.5V to 40V
Maximum output current (I_{OUT})		0.8A

EVQ6628-F-00A EVALUATION BOARD

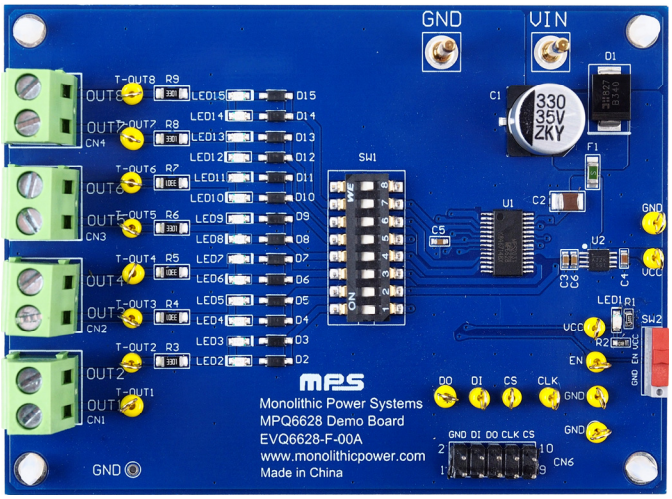

LxWxH (9.7cmx7.2cmx2.5cm)

Board Number	MPS IC Number
EVQ6628-F-00A	MPQ6628GF-AEC1

MPS Proprietary Information. Patent Protected. Unauthorized Photocopy and Duplication Prohibited.
© 2022 MPS. All Rights Reserved.

QUICK START GUIDE

The EVQ6628-R-00A evaluation board is easy to set up and use to evaluate the performance of the MPQ6628. For proper measurement equipment set-up, refer to Figure 1 and follow the steps below:

1. Pull SW2 down to enable the IC.
2. Apply external SPI signals to CN6.
3. Connect the loads from OUT1 to OUT8.
4. The 3.3V logic power supply is on the board.
5. Connect the V_{IN} power supply terminals (recommended operating voltage range is 5.5V to 40V) to:
   a. Positive (+): VIN
   b. Negative (-): GND

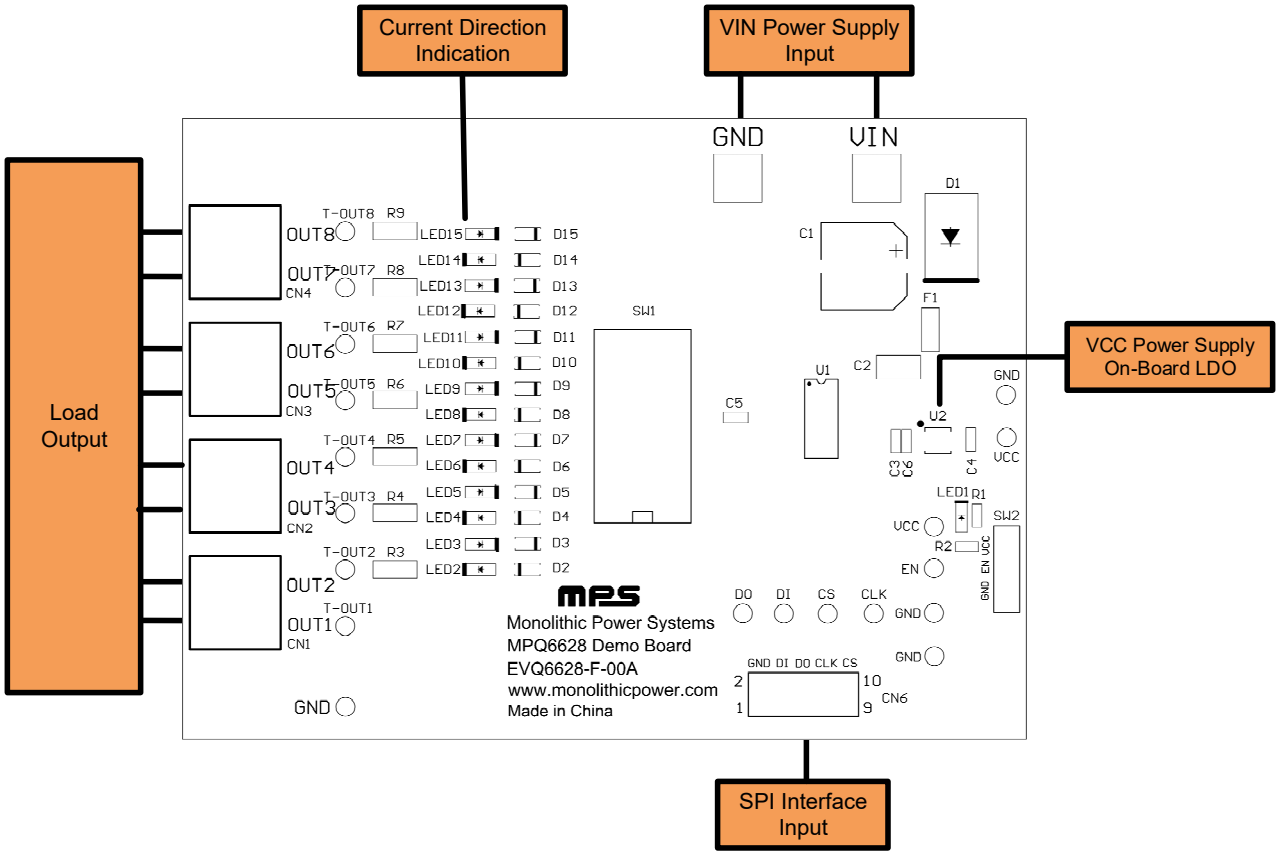

Figure 1: Test Set-Up for the EVQ6628-F-00A

The EVQ6628-F-00A also includes monitors and a GUI interface:

Monitor Set-Up

1. For H-bridge applications, the rotation direction of the DC motors can be observed via the LED circuit, which is enabled when SW1 is turned on.
2. All pins are accessible via test points.

MPS Proprietary Information. Patent Protected. Unauthorized Photocopy and Duplication Prohibited.
© 2022 MPS. All Rights Reserved.

GUI Operation

Figure 2 shows the very simple control interface for the multi-channel half-bridges.

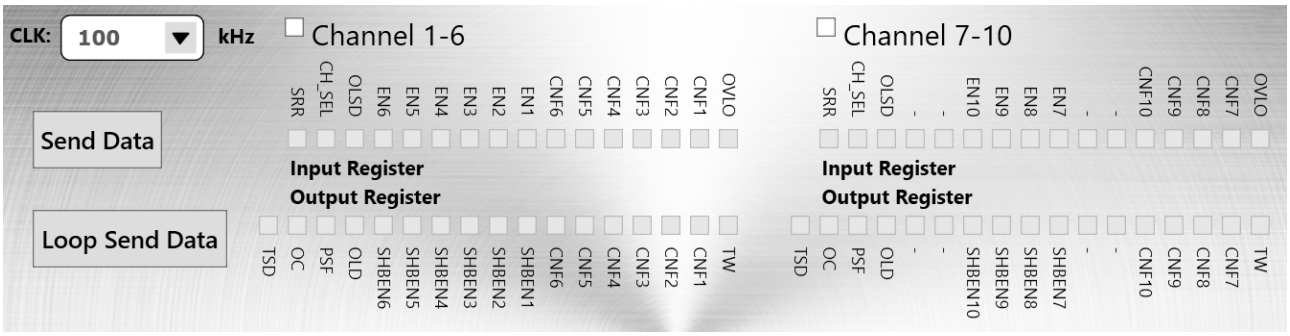

Figure 2: EVQ6628-F-00A GUI Interface

1. Select the SPI clock frequency using the CLK drop-down menu.
2. Select the “Channel 1-6” box to activate input register configuration. All bits can be set flexibly.
3. Select the “Channel 7-10” box to activate channels 7 and 8. Ignore channels 9 and 10.
4. Click “Send Data” to send serial data once, or click “Loop Send Data” to send data repeatedly with a fixed frequency.
5. All the register bits are labeled, making it is easy to find the output register status.

MPS Proprietary Information. Patent Protected. Unauthorized Photocopy and Duplication Prohibited.
© 2022 MPS. All Rights Reserved.

EVALUATION BOARD SCHEMATIC

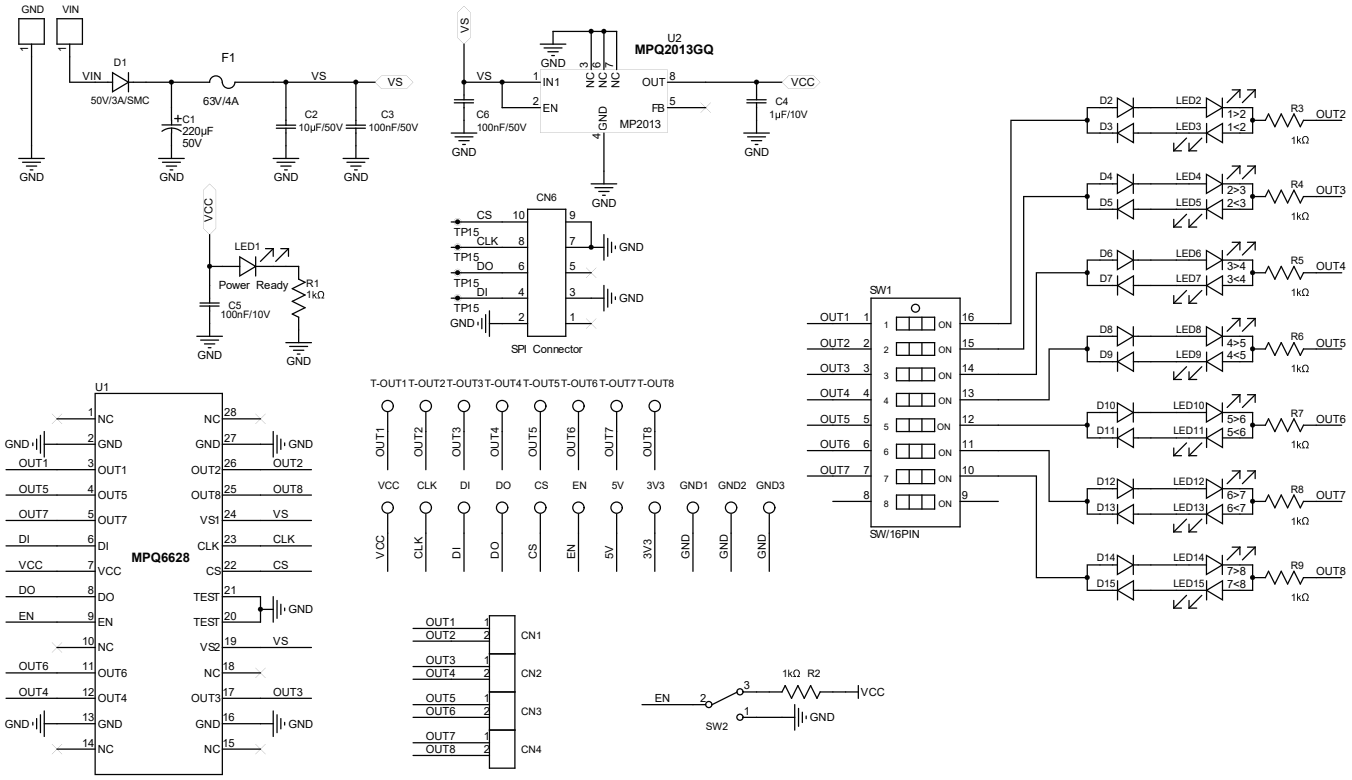

Figure 3: Evaluation Board Schematic

MPS Proprietary Information. Patent Protected. Unauthorized Photocopy and Duplication Prohibited.
© 2022 MPS. All Rights Reserved.

EVQ6628-F-00A BILL OF MATERIALS

Qty	Ref	Value	Description	Package	Manufacturer	Manufacturer PN
19	3.3V, CLK, CS, DI, DO, EN, GND1, GND2, GND3, OUT1, OUT2, OUT3, OUT4, OUT5, OUT6, OUT7, OUT8, VCC, VS1	1mm	Test points	SIP	Custom	
1	C1	330µF	Electrolytic capacitor, 35V	SMD	Panasonic	EEV-TG1J221Q
1	C2	10µF	Ceramic capacitor, 50V, X7R	1210	Murata	GRM32ER71H106KA12L
3	C3, C5, C6	100nF	Ceramic capacitor, 50V, X7R	0603	Murata	GCJ188R71H104KA12D
1	C4	4.7µF	Ceramic capacitor, 6.3V, X5R	0603	Murata	GRM188R60J475ME19D
4	CN1, CN2, CN3, CN4	2mm	Connector, 2-pin	DIP	Wurth	691216510002
1	CN6	2.54mm	Dual line connector	DIP	Custom	
1	D1	40V	Diode, 3A	SMC	Diodes, Inc.	B340
14	D2, D3, D4, D5, D6, D7, D8, D9, D10, D11, D12, D13, D14	75V	Diode, 0.15A	SOD-123	Diodes, Inc.	1N4148W
1	F1	63V	Fuse, 4A	1206	Cooper	CC12H4A
2	GND, VIN	2mm	Connector	SIP	Custom	
1	LED1	20mA	Red LED	0805	Bright LED	BL-HUE35A-AV-TRB
14	LED2, LED3, LED4, LED5, LED6, LED7, LED8, LED9, LED10, LED11, LED12, LED13, LED14, LED15	20mA	Green LED	0805	Bright LED	BL-HGE36A-AV-TRB
2	R1, R2	1kΩ	Film resistor, 1%	0603	Yageo	RC0603FR-071KL
7	R3, R4, R5, R6, R7, R8, R9	3.3kΩ	Film resistor, 1%	1206	Yageo	RC1206FR-073K3L
1	SW2	500mA	Switch, 3-pin	DIP	Wurth	450301014042
1	SW1	25mA	Switch, 6-bit	SMD	Wurth	418121270806
1	U2	MPQ2013A	3.3V step-down regulator	QFN-8 (3mmx 3mm)	MPS	MPQ2013AGQ-33-Z
1	U1	MPQ6628	Half-bridge motor driver with serial input control	TSSOP-28EP	MPS	MPQ6628GF

MPS Proprietary Information. Patent Protected. Unauthorized Photocopy and Duplication Prohibited.
© 2022 MPS. All Rights Reserved.

EVB TEST RESULTS

V_{VS} = 13V, V_{VCC} = 3.3V, T_A = 25°C, unless otherwise noted.

Start-Up through VIN

High-side MOSFET (HS-FET) on, I_{OUT} = 800mA

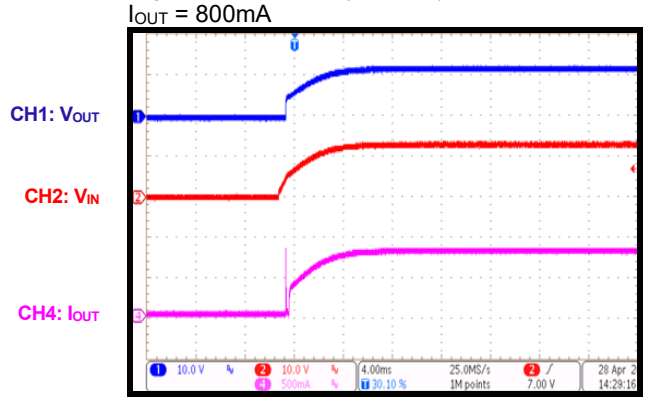

Shutdown through VIN

HS-FET on, I_{OUT} = 800mA

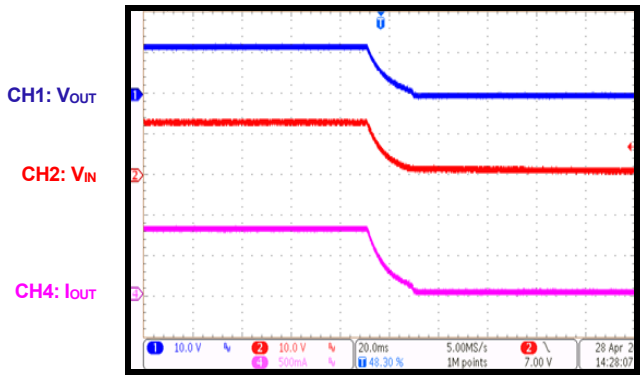

Start-Up through VIN

Low-side MOSFET (LS-FET) on, I_{OUT} = 800mA

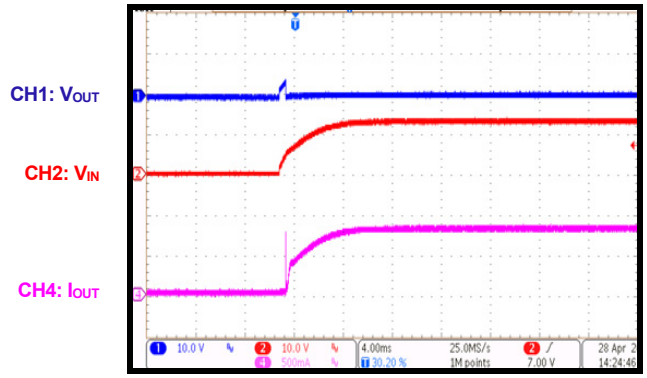

Shutdown through VIN

LS-FET on, I_{OUT} = 800mA

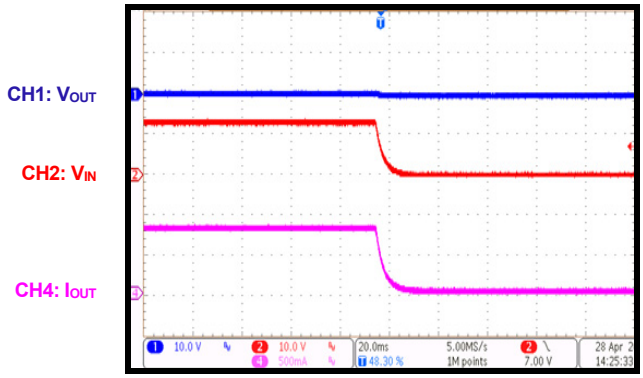

Over-Current Protection (OCP)

OUT shorted to GND

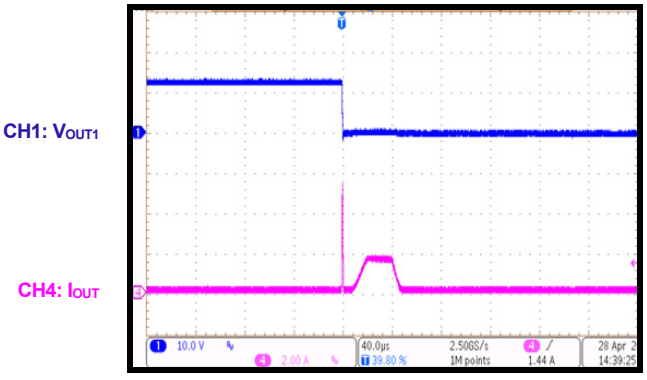

OCP

OUT shorted to VIN

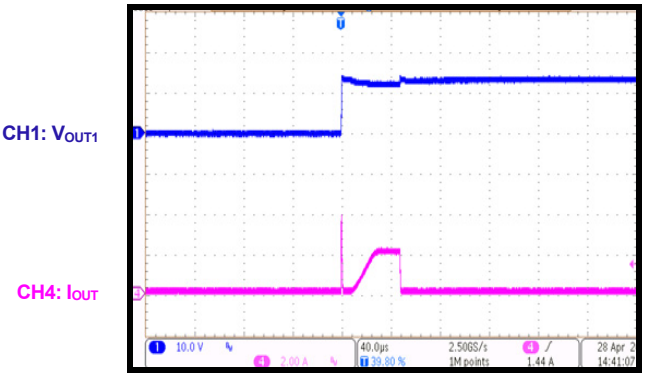

MPS Proprietary Information. Patent Protected. Unauthorized Photocopy and Duplication Prohibited.
© 2022 MPS. All Rights Reserved.

EVB TEST RESULTS *(continued)*

V_{VS} = 13V, V_{VCC} = 3.3V, T_A = 25°C, unless otherwise noted.

OCP

OUT shorted to OUT

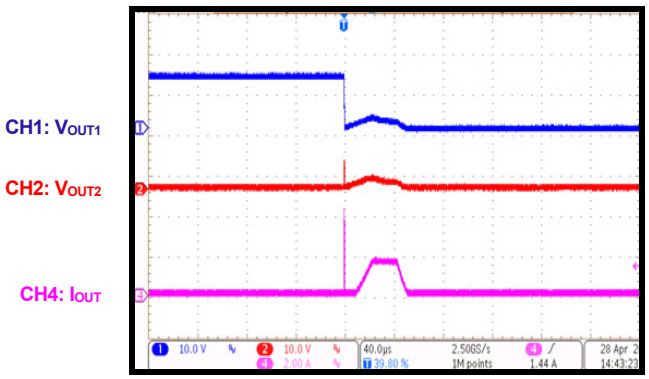

MPS Proprietary Information. Patent Protected. Unauthorized Photocopy and Duplication Prohibited.
© 2022 MPS. All Rights Reserved.

PCB LAYOUT

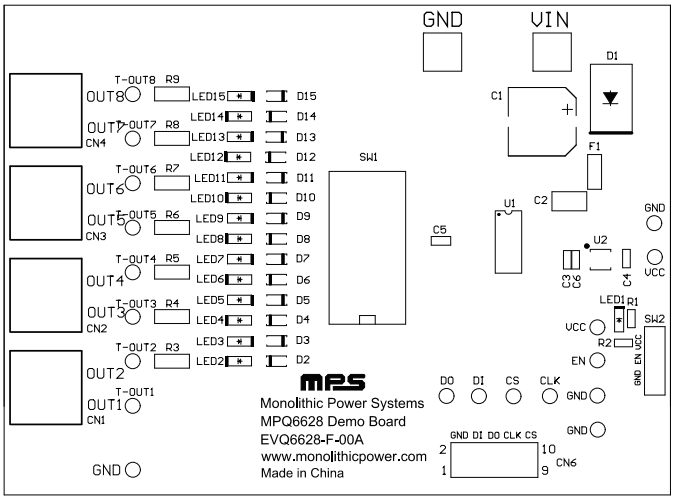

Figure 4: Top Silk

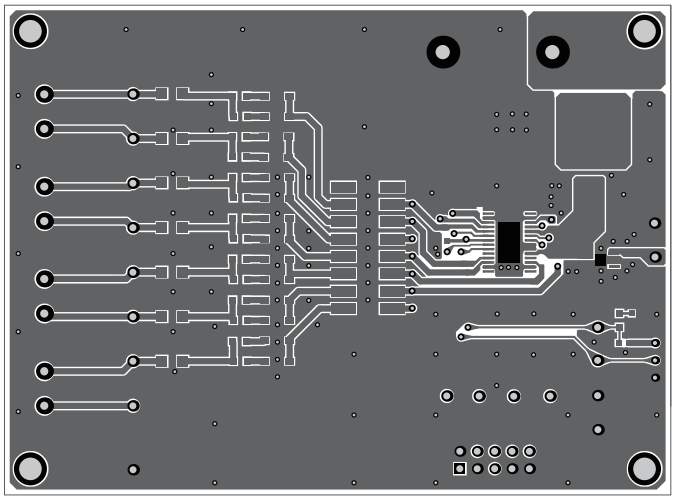

Figure 5: Top Layer

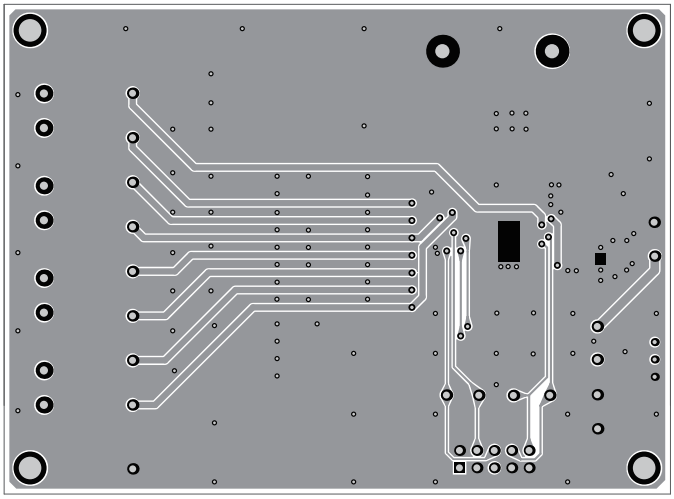

Figure 6: Bottom Layer

MPS Proprietary Information. Patent Protected. Unauthorized Photocopy and Duplication Prohibited.
© 2022 MPS. All Rights Reserved.

REVISION HISTORY

Revision #	Revision Date	Description	Pages Updated
1.0	5/17/2022	Initial Release	-

Notice: The information in this document is subject to change without notice. Please contact MPS for current specifications. Users should warrant and guarantee that third-party Intellectual Property rights are not infringed upon when integrating MPS products into any application. MPS will not assume any legal responsibility for any said applications.

MPS Proprietary Information. Patent Protected. Unauthorized Photocopy and Duplication Prohibited.
© 2022 MPS. All Rights Reserved.