DK4N

DIN Rail Terminal Blocks > Screw Connection

Date:2024-05-27Version:1.2

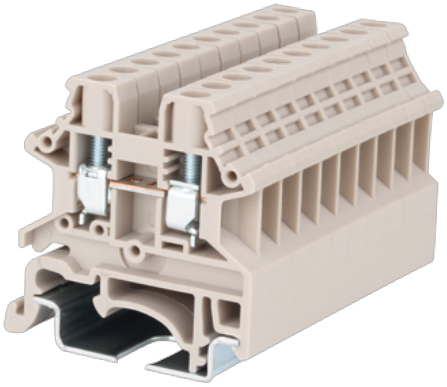

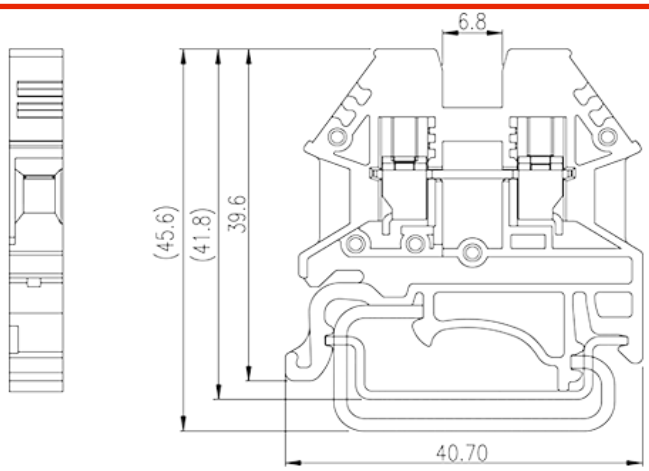

The web catalog is for reference only. Dinkle remains the right of product modification and engineering change of the design.
The final product is made according to engineering drawing.

Product Description

M3, 600V, 30A, Beige (default)

General information

Short description	DIN rail terminal blocks, Feed through terminal blocks
Category	Feed through terminal blocks
Color	Beige (default)
Connection method	Screw connection
Type of locking	Rail mounting
Length (mm)	40.7
Width (mm)	6.1
Height (mm)	39.6
Number of positions	□1P
Level	Single level
Connection points	2

Material information

Insulation material	PA
Insulation material group	I
Flame retardant rating , compliant with UL94	V0

© DINKLE ENTERPRISE CO ,LTD. ALL RIGHT RESERVED

Insulation resistance	□500MΩ at DC 500V

Connection data-IEC

Rated voltage (V)	800
Rated current (A)	32
Rated voltage (III/3)(V)	800
Rated impulse voltage (II/2)(KV)	8
Rated impulse voltage (III/2)(KV)	8
Rated impulse voltage (III/3)(KV)	8
Conductor cross section solid. min (mm²)	0.34
Conductor cross section solid.max (mm²)	4
Conductor cross section stranded. min (mm²)	0.34
Conductor cross section stranded. max (mm²)	4
Conductor cross section flexible, with min ferrule without plastic sleeve (mm²)	0.34
Conductor cross section flexible, with max ferrule without plastic sleeve (mm²)	4
Conductor cross section flexible, with min ferrule with plastic sleeve (mm²)	0.34
Conductor cross section flexible, with max ferrule with plastic sleeve (mm²)	4
2 conductors with same cross section, solid, min (mm²)	0.34
2 conductors with same cross section, solid, max (mm²)	2.5
2 conductors with same cross section, stranded, min (mm²)	0.34
2 conductors with same cross section, stranded, max (mm²)	2.5
2 conductors with same cross section flexible, with min ferrule without plastic sleeve (mm²)	0.5
2 conductors with same cross section flexible, with max ferrule without plastic sleeve (mm²)	2.5
2 conductors with same cross section flexible, min twin ferrules with plastic sleeve (mm²)	0.5
2 conductors with same cross section flexible, max twin ferrules with plastic sleeve (mm²)	2.5
Screw thread	M3
Slotted screwdriver size (Blade thickness x Width)(mm)	0.6x3.5
Philips screwdriver size	PH0
Rated torque (N.m)	0.6

© DINKLE ENTERPRISE CO ,LTD. ALL RIGHT RESERVED

Stripping Length (mm)	9~11
Mounting rail	TS-35
End cover plate required	YES
Grounding connections	NO

Connection data-UL

Rated voltage (UL/CUL Group B)(V)	600
Rated current (UL/CUL Group B)(A)	30
Rated voltage (UL/CUL Group C)(V)	600
Rated current (UL/CUL Group C)(A)	30
Rated voltage (UL/CUL Group D)(V)	600
Rated current (UL/CUL Group D)(A)	5
Min. solid wire connection (AWG) acc. to UL/CUL	22
Max. solid wire connection AWG acc. to UL/CUL	10
Min. stranded wire connection AWG acc. to UL/CUL	22
Max. stranded wire connection AWG acc. to UL/CUL	10

Environment & Safety

Back of the hand protection (YES or NO)	YES
Finger protection (YES or NO)	YES
Operating temperature. max (°C)	120
Operating temperature. min (°C)	-40

UL Recognized

Wire Range (Group B)(AWG)	22~10
Rated voltage (Group B)(V)	600
Rated current (Group B)(A)	30
Wire Range (Group C)(AWG)	22~10
Rated voltage (Group C)(V)	600
Rated current (Group C)(A)	30
Wire Range (Group D)(AWG)	22~10
Rated voltage (Group D)(V)	600
Rated current (Group D)(A)	5

CUL Recognized

© DINKLE ENTERPRISE CO ,LTD. ALL RIGHT RESERVED

Wire Range (Group B)(AWG)	22~10
Rated voltage (Group B)(V)	600
Rated current (Group B)(A)	30
Wire Range (Group C)(AWG)	22~10
Rated voltage (Group C)(V)	600
Rated current (Group C)(A)	30
Wire Ranget (Group D)(AWG)	22~10
Rated voltage (Group D)(V)	600
Rated current (Group D)(A)	5

VDE Approval

Wire Range (mm²)	0.34~4
Rated voltage (V)	800
Rated current (A)	32

Explosion - proof Approvals

Wire Range (mm²)	0.34~4.0
Rated voltage (V)	800
Rated current (A)	32

Drawings

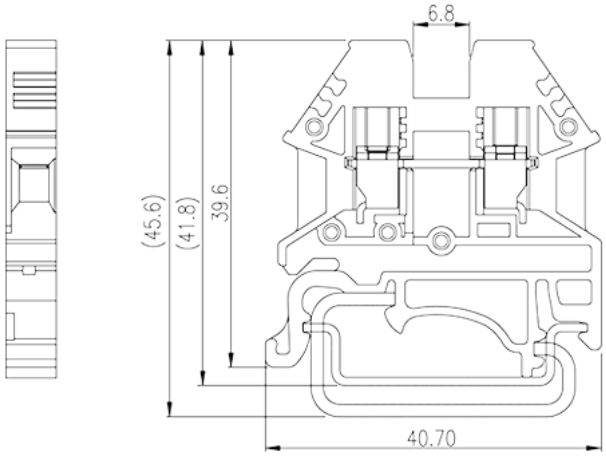



Approvals

© DINKLE ENTERPRISE CO ,LTD. ALL RIGHT RESERVED

© DINKLE ENTERPRISE CO ,LTD. ALL RIGHT RESERVED