SAC-3P-10,0-160/M8FR 0,34 - Sensor/actuator cable

1401234

https://www.phoenixcontact.com/us/products/1401234

Please be informed that the data shown in this PDF document is generated from our online catalog. Please find the complete data in the user documentation. Our general terms of use for downloads are valid.



Sensor/actuator cable, 3-position, PUR halogen-free, irradiated, yellow, free cable end, on Socket angled M8, coding: A, cable length: 10 m

Commercial data

Item number	1401234
Packing unit	1 pc
Minimum order quantity	1 pc
Note	Made to order (non-returnable)
Sales key	BF01
Product key	BF1BBA
GTIN	4046356540520
Weight per piece (including packing)	357 g
Weight per piece (excluding packing)	357 g
Customs tariff number	85444290
Country of origin	PL

Technical data

Product properties

Product type	Sensor/actuator cable
Number of positions	3
No. of cable outlets	1
Coding	A

Insulation characteristics

Overvoltage category	II
Degree of pollution	3

Material specifications

Flammability rating according to UL 94	HB
Seal material	NBR
Material of grip body	TPU, hardly inflammable, self-extinguishing
Contact material	CuSn
Contact surface material	Ni/Au
Contact carrier material	TPU GF
Material for screw connection	Zinc die-cast, nickel-plated

Electrical properties

Insulation resistance	≥ 100 MΩ
Nominal voltage U_N	48 V AC
	60 V DC
Nominal current I_N	4 A

Mechanical properties

Mechanical data

Insertion/withdrawal cycles	≥ 100

Signaling

Status display	No
Status display present	No

Connector

Connection 1

Type	free cable end

Connection 2

Type	Socket angled M8
Number of positions	3
Coding type	A

Cable/line

Cable length	10 m

PUR irradiated halogen-free yellow [160]

Dimensional drawing	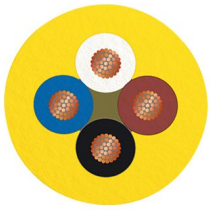
Number of positions	4
Shielded	no
Cable type	PUR irradiated halogen-free yellow [160]
Conductor structure signal line	19x 0.15 mm
AWG signal line	22
Conductor cross section	4x 0.34 mm² (Signal line)
Wire diameter incl. insulation	1.05 mm ±0.05 mm (Signal line)
External cable diameter	5.20 mm ±0.2 mm
Outer sheath, material	PUR
External sheath, color	yellow
Conductor material	Bare Cu litz wires
Material wire insulation	PE
Single wire, color	brown, white, blue, black
Overall twist	4 wires, twisted
Length of twist, overall twist	27 mm
Max. conductor resistance	≤ 57 Ω/km
Nominal voltage, cable	320 V AC
Test voltage	2500 V AC (50 Hz, 5 minutes)
Smallest bending radius, fixed installation	min. 15 mm
Smallest bending radius, movable installation	min. 30 mm
Max. bending cycles	5000000
Bending radius	52 mm
Traversing path	10 m
Traversing rate	3 m/s
Torsion force	360 °/m
Halogen-free	The cable is halogen-free
Flame resistance	DIN VDE 0472 part 804, test type B
Other resistance	hydrolysis and microbe resistant
Special properties	Silicone-free
	Irradiated
Ambient temperature (operation)	-50 °C ... 105 °C (cable, fixed installation)

	-40 °C ... 105 °C (Cable, flexible installation)

Environmental and real-life conditions

Ambient conditions

Degree of protection	IP65
	IP67
	IP68
Ambient temperature (operation)	-25 °C ... 90 °C (Plug / socket)

Drawings

Dimensional drawing

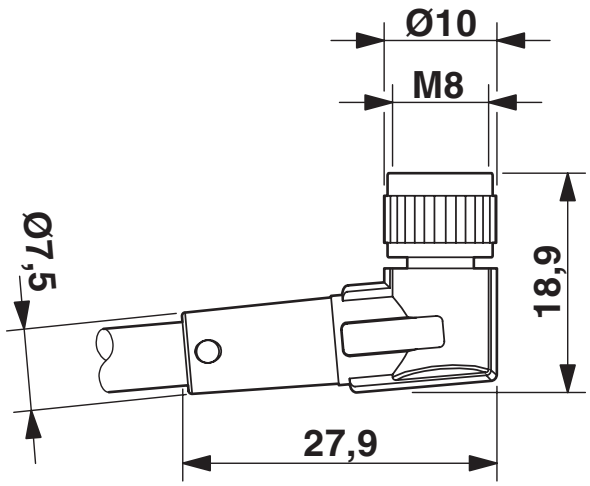

Socket M8 x 1, angled

Schematic diagram

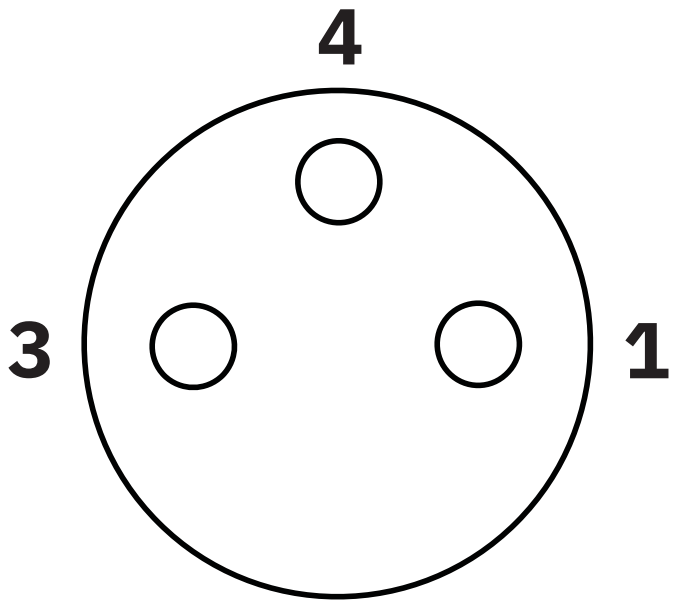

Pin assignment M8 socket, 3-pos., view female side

Circuit diagram

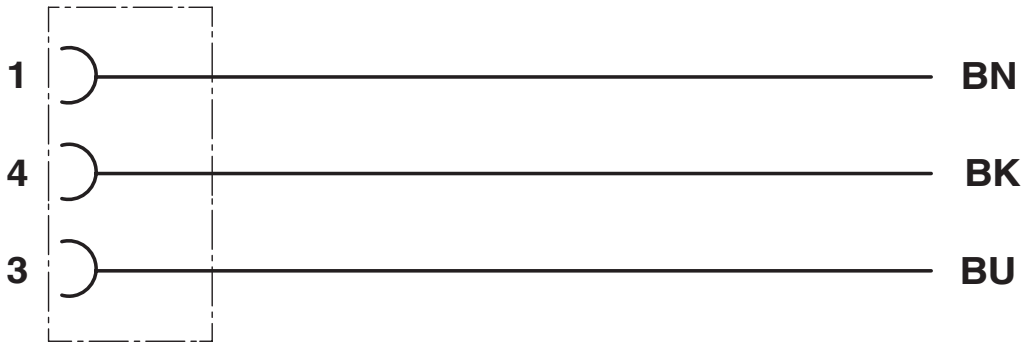

Classifications

ECLASS

ECLASS-11.0	27060311
ECLASS-12.0	27060311
ECLASS-13.0	27060311

ETIM

ETIM 8.0	EC001855

UNSPSC

UNSPSC 21.0	26121600

Environmental product compliance

EU RoHS

Fulfills EU RoHS substance requirements	Yes, No exemptions

China RoHS

Environment friendly use period (EFUP)	EFUP-E
	No hazardous substances above the limits

EU REACH SVHC

REACH candidate substance (CAS No.)	No substance above 0.1 wt%

Phoenix Contact 2024 © - all rights reserved
https://www.phoenixcontact.com

Phoenix Contact USA
586 Fulling Mill Road
Middletown, PA 17057, United States
(+717) 944-1300
info@phoenixcon.com