SACC-M12MR-5CT-CM SH - Connector

1422851

https://www.phoenixcontact.com/us/products/1422851

Please be informed that the data shown in this PDF document is generated from our online catalog. Please find the complete data in the user documentation. Our general terms of use for downloads are valid.



Connector, Universal, 5-position, shielded, Plug angled M12, coding: A, Crimp connection, knurl material: Zinc die-cast, tin-plated, external cable diameter 4.5 mm ... 7.5 mm, without crimp contacts

Your advantages

- Extremely compact, thanks to the small wiring space and high contact density
- Safe use in the field, thanks to a high degree of protection
- Safely shielded: reliable shield connection even under extreme mechanical strain
- Robust connection: suitable for railway applications with high shock and vibration loads

Commercial data

Item number	1422851
Packing unit	1 pc
Minimum order quantity	1 pc
Sales key	BF34
Product key	BF2CJA
Catalog page	Page 27 (C-2-2019)
GTIN	4055626357782
Weight per piece (including packing)	34.78 g
Weight per piece (excluding packing)	34 g
Customs tariff number	85366990
Country of origin	DE

Technical data

Notes

Assembly note	NOTE: Observe the permissible bending radii when laying conductors, since the degree of protection may be put in jeopardy if the bending forces are too high. Alleviate mechanical loads upstream of the connector, e.g. by using cable ties.

Mounting

Assembly note	Contacts can be clipped in place and unclipped without tools
	The pin assignment can be rotated in a 30° pitch to the cable outlet

Product properties

Product type	Circular connector (cable-side)
Sensor type	Universal
Number of positions	5
No. of cable outlets	1
Shielded	yes
Coding	A
Cable outlet	angled

Insulation characteristics

Overvoltage category	III
Degree of pollution	3

Dimensions

Dimensional drawing	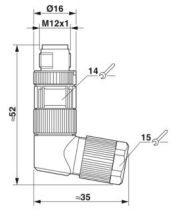
Length	52 mm
Wrench size, union nut	15 mm
Wrench size, counter nut	14 mm

External dimensions

Outside diameter	4.5 mm ... 7.5 mm

Housing

Diameter housing	16 mm

Material specifications

Flammability rating according to UL 94	V0

Seal material	FKM
Material of grip body	Zinc die-cast, nickel-plated
Contact carrier material	PA 6.6
Material for screw connection	Zinc die-cast, tin-plated
Standards/regulations	PA 6.6: Fire protection in rail vehicles - requirement sets R22, R23, R24, and R26 acc. to DIN EN 45545-2 (Risk level HL1 - HL3)

Connection data

Conductor connection

Connection method	Crimp connection
Connection cross section	0.14 mm² ... 1 mm² (flexible)
Connection cross section AWG	26 ... 18 (flexible)
Stripping length of the individual wire	4 mm +0,5 mm
Tightening torque	0.4 Nm (M12 knurl)
	1.5 Nm (Screw plug insert with sleeve housing as far it will go)
	4 Nm (Pressure nut with coupling sleeve)

Pin assignment

Contact | Color (signal designation) | Contact (optional)	1 = BN
	2 = WH
	3 = BU
	4 = BK
	5 = GY

Electrical properties

Rated surge voltage	1.5 kV
Insulation resistance	≥ 100 MΩ
Nominal voltage U_N	48 V AC
	60 V DC
Nominal current I_N	4 A

Mechanical properties

Mechanical data

Insertion/withdrawal cycles	≥ 100

Connector

Connection 1

Head design	Plug
Head cable outlet	angled
Head thread type	M12
Coding	A

Cable/line

Signal type/category	Universal
Stripping length of the individual wire	4 mm +0,5 mm

Environmental and real-life conditions

Ambient conditions

Degree of protection	IP65
	IP67
Ambient temperature (operation)	-40 °C ... 85 °C (Plug / socket)

Standards and regulations

Testing

Standards/regulations	PA 6.6: Fire protection in rail vehicles - requirement sets R22, R23, R24, and R26 acc. to DIN EN 45545-2 (Risk level HL1 - HL3)
Standard designation	M12 connector
Standards/specifications	IEC 61076-2-101
Standard designation	Shock, vibration
Standards/specifications	EN 50155:2001

Drawings

Schematic diagram

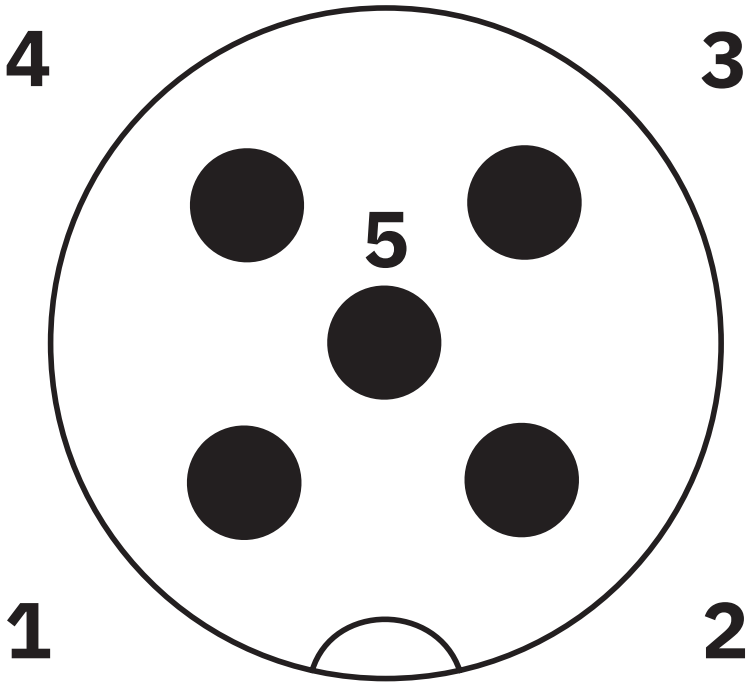

Pin assignment M12 male connector, 5-pos., A-coded, male side

Functional drawing

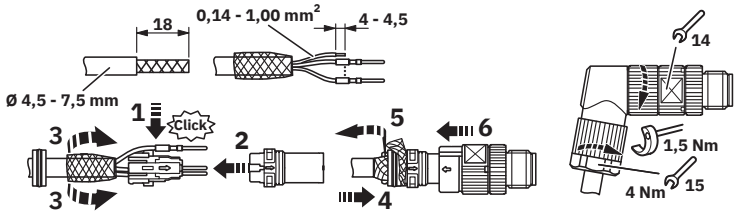

Functional drawing

Dimensional drawing

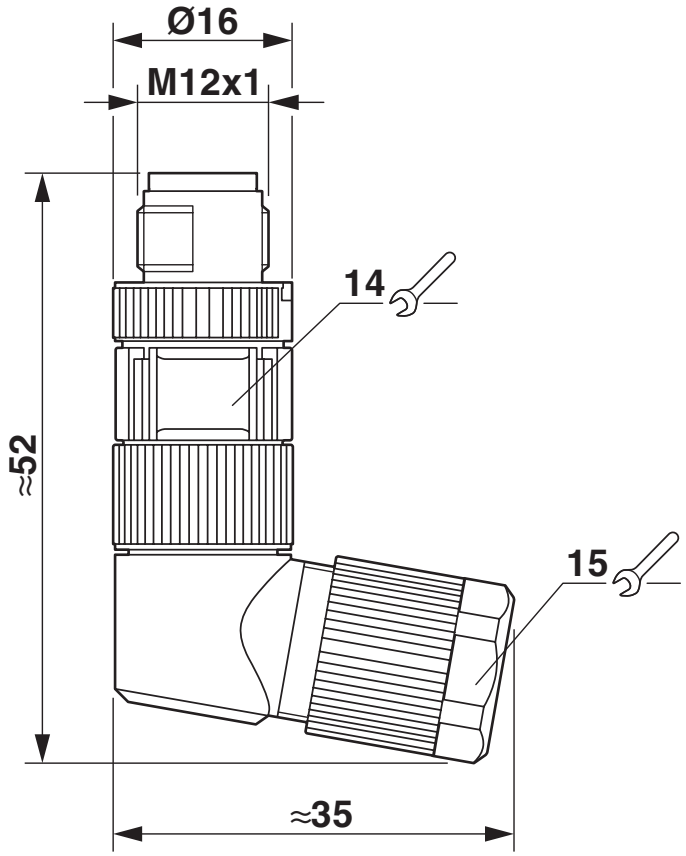

M12 x 1 male plug, angled, shielded

Approvals

To download certificates, visit the product detail page: https://www.phoenixcontact.com/us/products/1422851

EAC
Approval ID: RU C-DE.BL08.B.00511

Classifications

ECLASS

ECLASS-11.0	27440102
ECLASS-12.0	27440116
ECLASS-13.0	27440116

ETIM

ETIM 9.0	EC002635

UNSPSC

UNSPSC 21.0	39121400

Environmental product compliance

EU RoHS

Fulfills EU RoHS substance requirements	Yes, No exemptions

China RoHS

Environment friendly use period (EFUP)	EFUP-E
	No hazardous substances above the limits

EU REACH SVHC

REACH candidate substance (CAS No.)	No substance above 0.1 wt%

Mandatory accessories

CC1,0-TS-0,34M AU - Crimp contact

1064040

https://www.phoenixcontact.com/us/products/1064040



Crimp contact, contact diameter: 1 mm, turned, Pin, contact material: CuZn, contact surface: Ni/Au, connection cross section: 0.14 mm^2 ... 0.34 mm^2, AWG 26 ... 22

CC1,0-TS-1,00M AU - Crimp contact

1423645

https://www.phoenixcontact.com/us/products/1423645



Crimp contact, contact diameter: 1 mm, turned, Pin, contact material: CuZn, contact surface: Ni/Au, connection cross section: 0.34 mm^2 ... 1 mm^2, AWG 22 ... 18

Accessories

CRIMPFOX-TC MP - Crimping pliers with digital display

1212510

https://www.phoenixcontact.com/us/products/1212510



Crimping pliers, for turned contacts, universal cross section setting, up to a maximum of 2.5 mm^2, digital display with 0.01 mm increments, pressure lock can be unlocked, including positioning tool

MICROFOX-SB - Diagonal cutter

1212489

https://www.phoenixcontact.com/us/products/1212489



Electronic diagonal cutter, round head, without chamfer, with opening spring, mirror-polished and oiled, 2-component grip, cutting capacity: soft 0.2 - 2.0 mm; medium hard 1.2 mm; hard 0.5 mm diameter

WIREFOX-D 13 - Stripping tool

1212162

https://www.phoenixcontact.com/us/products/1212162



Stripping tool, for stripping installation lines of Ø 8 - 13 mm , e.g. NYM 3 x 1.5 mm^2 to 5 x 2.5 mm^2, single line stripping 0.2 mm^2 - 4 mm^2 , with longitudinal cut blade and sliding knife

WIREFOX SAC - Stripping tool

1212623

https://www.phoenixcontact.com/us/products/1212623



Stripping pliers, for halogen-free sensor/actuator cables (SAC cables), with PUR and PVC insulation, from Ø of 4.4 to 7 mm, any stripping length

TSD 04 SAC - Torque screwdriver

1208429

https://www.phoenixcontact.com/us/products/1208429



Torque screwdriver, with preset torque of 0.4 Nm and 4 mm hexagonal drive for M12 connectors

SAC BIT M12-D16 - Tool

1200305

https://www.phoenixcontact.com/us/products/1200305



Nut for assembling sensor/actuator cables with M12 connector and M12 connectors for assembly, knurl diameter: 16 mm, for 4 mm hexagonal drive

TSD-M 1,2NM - Torque screwdriver

1212224

https://www.phoenixcontact.com/us/products/1212224



Torque screw driver, accuracy as per EN ISO 6789 standard, adjustable from 0. 3 - 1.2 Nm

TSD-M SAC-BIT ADAPTER - Adapter insert

1212600

https://www.phoenixcontact.com/us/products/1212600



Adapter bit for TSD-M...torque tools, E6.3-1/4" drive with 4 mm hexagon to accommodate SAC bits

Phoenix Contact 2024 © - all rights reserved
https://www.phoenixcontact.com

Phoenix Contact USA
586 Fulling Mill Road
Middletown, PA 17057, United States
(+717) 944-1300
info@phoenixcon.com