SACC-MINMS-5CON-PG16 - Connector

1559039

https://www.phoenixcontact.com/us/products/1559039

Please be informed that the data shown in this PDF document is generated from our online catalog. Please find the complete data in the user documentation. Our general terms of use for downloads are valid.



Connector, Universal, 5-position, Plug straight 7/8"-16UNF, coding: A, Screw connection, knurl material: Zinc die-cast, nickel-plated, cable gland Pg16, external cable diameter 12 mm ... 14 mm, Contact 3 capacitive

Your advantages

- Safe use in the field, thanks to a high degree of protection
- Screw connection: proven connection technology for a large selection of different conductors

Commercial data

Item number	1559039
Packing unit	1 pc
Minimum order quantity	1 pc
Sales key	BF30
Product key	BF2FAA
Catalog page	Page 25 (C-2-2017)
GTIN	4046356299985
Weight per piece (including packing)	62.77 g
Weight per piece (excluding packing)	60.54 g
Customs tariff number	85366990
Country of origin	DE

Technical data

Notes

Assembly note	NOTE: Observe the permissible bending radii when laying conductors, since the degree of protection may be put in jeopardy if the bending forces are too high. Alleviate mechanical loads upstream of the connector, e.g. by using cable ties.

Mounting

Assembly note	The wires can be connected both with ferrules and without ferrules

Product properties

Product type	Circular connector (cable-side)
Sensor type	Universal
Number of positions	5
No. of cable outlets	1
Shielded	no
Coding	A
Cable outlet	straight
Pg screw connection	Pg16

Insulation characteristics

Overvoltage category	III
Degree of pollution	3

Dimensions

Dimensional drawing	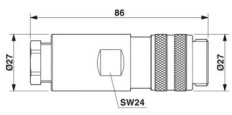
Width	27 mm
Height	27 mm
Length	86 mm

External dimensions

Outside diameter	12 mm ... 14 mm

Housing

Diameter housing	27 mm

Material specifications

Flammability rating according to UL 94	HB
Material of grip body	PBT
Contact material	CuZn

Contact surface material	Au
Contact carrier material	PUR/PA 6.6
Material for screw connection	Zinc die-cast, nickel-plated

Connection data

Conductor connection

Connection method	Screw connection
Connection cross section	0.34 mm² ... 1.5 mm² (without ferrule)
	0.34 mm² ... 1.5 mm² (with ferrule)
	0.34 mm² ... 1.5 mm² (solid)
Connection cross section AWG	22 ... 16 (without ferrule)
	22 ... 16 (with ferrule)
Stripping length of the individual wire	7 mm
Tightening torque	0.8 Nm (7/8" connectors)
	0.4 Nm (Screw terminal blocks)
	1 Nm ... 1.4 Nm (Pressure screw)

Electrical properties

Rated surge voltage	4 kV
Contact resistance	≤ 5 mΩ
Insulation resistance	≥ 100 MΩ
Nominal voltage U_N	300 V AC
	300 V DC
Nominal current I_N	9 A

Mechanical properties

Mechanical data

Insertion/withdrawal cycles	≥ 100

Connector

Connection 1

Head design	Plug
Head cable outlet	straight
Head thread type	7/8"-16UNF
Coding	A

Cable/line

Signal type/category	Universal
Stripping length of the individual wire	7 mm

Environmental and real-life conditions

Ambient conditions

Degree of protection	IP67

Ambient temperature (operation)	-25 °C ... 85 °C (Plug / socket)

Drawings

Dimensional drawing

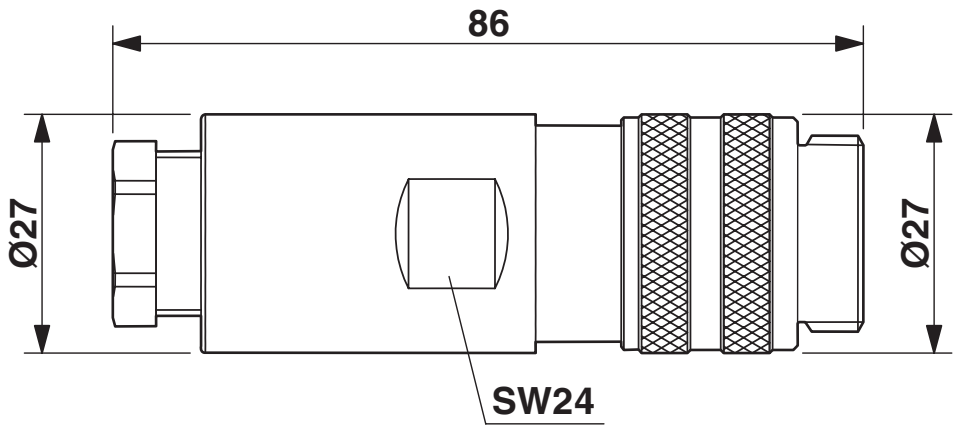

Plug 7/8"-16UNF, straight, Pg16

Schematic diagram

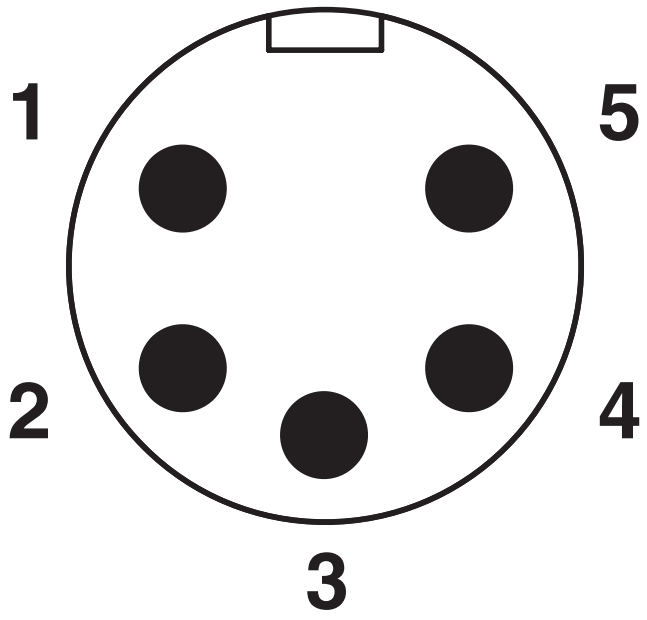

Pin assignment, plug, 7/8"-16UNF, 5-pos., view of male side

Functional drawing

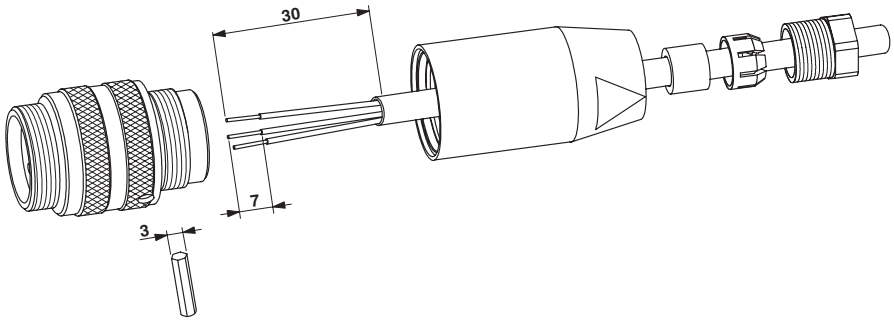

Approvals

To download certificates, visit the product detail page: https://www.phoenixcontact.com/us/products/1559039

cUL Recognized
Approval ID: FILE E 221474

	Nominal voltage U_N	Nominal current I_N	Cross section AWG	Cross section mm^2
	600 V	9 A	-	-

UL Recognized
Approval ID: FILE E 221474

	Nominal voltage U_N	Nominal current I_N	Cross section AWG	Cross section mm^2
	600 V	9 A	-	-

EAC
Approval ID: RU C-DE.BL08.B.00511

cULus Recognized

Classifications

ECLASS

ECLASS-11.0	27440102
ECLASS-12.0	27440116
ECLASS-13.0	27440116

ETIM

ETIM 9.0	EC002635

UNSPSC

UNSPSC 21.0	39121400

Environmental product compliance

EU RoHS

Fulfills EU RoHS substance requirements	Yes
Exemption	6(c)

China RoHS

Environment friendly use period (EFUP)	EFUP-50
	An article-related China RoHS declaration table can be found in the download area for the respective article under "Manufacturer declaration". For all articles with EFUP-E, no China RoHS declaration table issued and required.

EU REACH SVHC

REACH candidate substance (CAS No.)	Lead(CAS: 7439-92-1)
SCIP	53be4629-4ad2-4e1d-95ff-ee1e5f43d87b

Accessories

PROT-MINFS-PA-CHAIN - Sealing cap

1430912

https://www.phoenixcontact.com/us/products/1430912

7/8" sealing cap made of plastic with fixing band, for sensor cables, for 7/8" connectors



TSD 08 SAC - Torque screwdriver

1212597

https://www.phoenixcontact.com/us/products/1212597

Torque screw driver with preset torque of 0.8 Nm, with 4 mm hexagon for accommodating SAC bits, two-component handle with non-slip grip



TSD-M 1,2NM - Torque screwdriver

1212224

https://www.phoenixcontact.com/us/products/1212224



Torque screw driver, accuracy as per EN ISO 6789 standard, adjustable from 0. 3 - 1.2 Nm

TSD-M SAC-BIT ADAPTER - Adapter insert

1212600

https://www.phoenixcontact.com/us/products/1212600



Adapter bit for TSD-M...torque tools, E6.3-1/4" drive with 4 mm hexagon to accommodate SAC bits

SACC-MINMS-5CON-PG16 - Connector

1559039

https://www.phoenixcontact.com/us/products/1559039

SAC BIT MIN-D25 - Tool

1212512

https://www.phoenixcontact.com/us/products/1212512

Nut for assembling 7/8" connectors with a knurl diameter of 25 mm, with 4 mm hexagonal drive



Phoenix Contact 2024 © - all rights reserved
https://www.phoenixcontact.com

Phoenix Contact USA
586 Fulling Mill Road
Middletown, PA 17057, United States
(+717) 944-1300
info@phoenixcon.com