SAC-4P- 1,5-110/M12FRL - Power cable

1425057

https://www.phoenixcontact.com/us/products/1425057

Please be informed that the data shown in this PDF document is generated from our online catalog. Please find the complete data in the user documentation. Our general terms of use for downloads are valid.



Power cable, 4-position, PVC, black-gray RAL 7021, free cable end, on Socket angled M12, coding: L, cable length: 1.5 m, For direct current up to 12 A/63 V

Your advantages

- Easy and safe: 100 % electrically tested plug-in components
- Protection against mismatching, thanks to special L-coding

Commercial data

Item number	1425057
Packing unit	1 pc
Minimum order quantity	1 pc
Sales key	BF05
Product key	BF1CCR
Catalog page	Page 297 (C-2-2019)
GTIN	4055626383958
Weight per piece (including packing)	184.9 g
Weight per piece (excluding packing)	184 g
Customs tariff number	85444290
Country of origin	PL

Technical data

Product properties

Product type	Power cable
Application	Power supply
Number of positions	4
No. of cable outlets	1
Shielded	no
Coding	L

Insulation characteristics

Overvoltage category	III
Degree of pollution	3

Material specifications

Flammability rating according to UL 94	V0
Material of grip body	PP
Contact material	CuZn
Contact surface material	Ni/Au
Contact carrier material	PA
Material for screw connection	Zinc die-cast, nickel-plated

Electrical properties

Insulation resistance	≥ 100 MΩ
Nominal voltage U_N	63 V DC
Nominal current I_N	12 A

Mechanical properties

Mechanical data

Insertion/withdrawal cycles	≥ 100

Connector

Connection 1

Type	free cable end

Connection 2

Type	Socket angled M12
Coding type	L (Power)

Cable/line

Cable length	1.5 m

PVC 1.5 mm² black [110]

Dimensional drawing	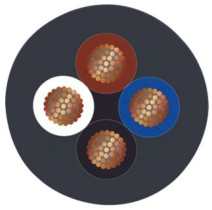
Cable weight	108 kg/km
UL AWM Style	20233 / 10493 (80°C/300 V)
Number of positions	4
Shielded	no
Cable type	PVC 1.5 mm² black [110]
Conductor cross section	4x 1.5 mm²
Wire diameter incl. insulation	2.35 mm ±0.05 mm
External cable diameter	7.55 mm ±0.25 mm
Outer sheath, material	PVC
External sheath, color	black-gray RAL 7021
Conductor material	Bare Cu litz wires
Material wire insulation	PVC
Single wire, color	brown, white, blue, black
Thickness, insulation	≥ 0.25 mm
Thickness, outer sheath	approx. 1.30 mm
Max. conductor resistance	≤ 13 Ω/km (at 20 °C)
Insulation resistance	≥ 1 GΩ*km (at 20 °C)
Nominal voltage, cable	≤ 300 V AC
Test voltage	≥ 3000 V AC (Spark test)
Minimum bending radius, fixed installation	5 x D
Minimum bending radius, flexible installation	10 x D
Smallest bending radius, fixed installation	38 mm
Smallest bending radius, movable installation	76 mm
Max. bending cycles	2000000
Minimum bending radius, drag chain applications	10 x D
Traversing path	10 m
Traversing rate	3 m/s
Acceleration	10 m/s²
Flame resistance	According to UL 758/1581 (Cable Flame)
	according to UL 758/1581 FT1
	According to DIN EN 60332-1-2
Resistance to oil	according to DIN EN 60811-404, 168 h at 60 °C
Ambient temperature (operation)	-40 °C ... 80 °C (cable, fixed installation)
	-20 °C ... 80 °C (Cable, flexible installation)

Environmental and real-life conditions

Ambient conditions

Degree of protection	IP65
	IP67
Ambient temperature (operation)	-25 °C ... 85 °C (Plug / socket)

Standards and regulations

Standard designation	M12 connector
Standards/specifications	IEC 61076-2-111

Drawings

Schematic diagram

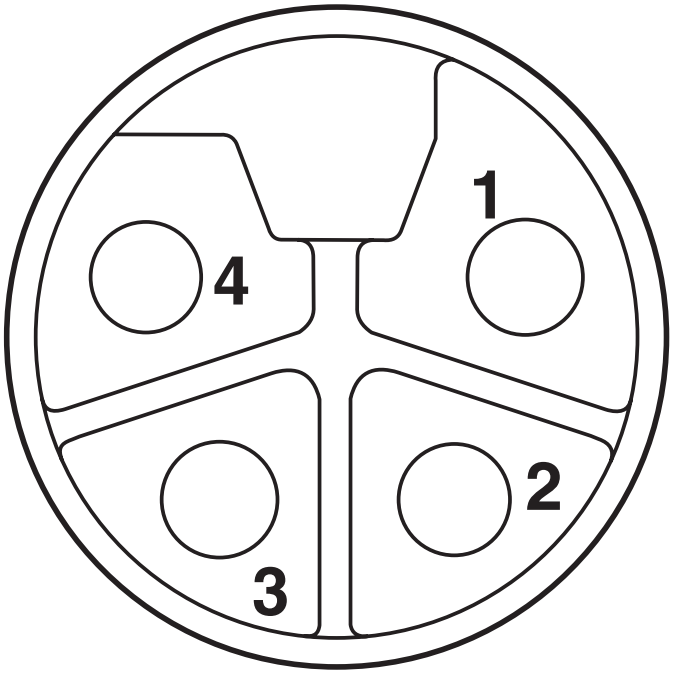

Pin assignment of M12 socket, 4-pos.

Dimensional drawing

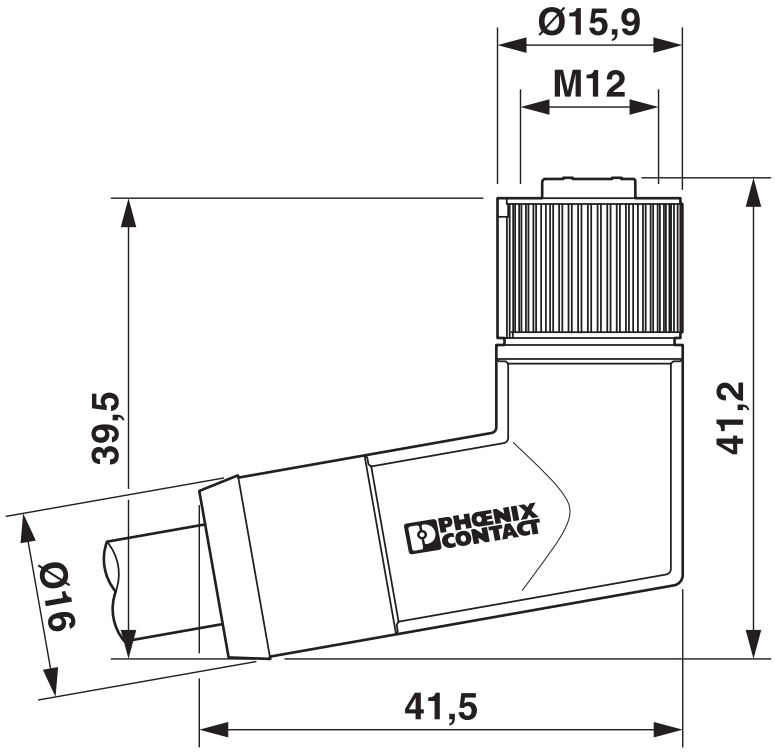

M12 x 1 socket, angled

Circuit diagram

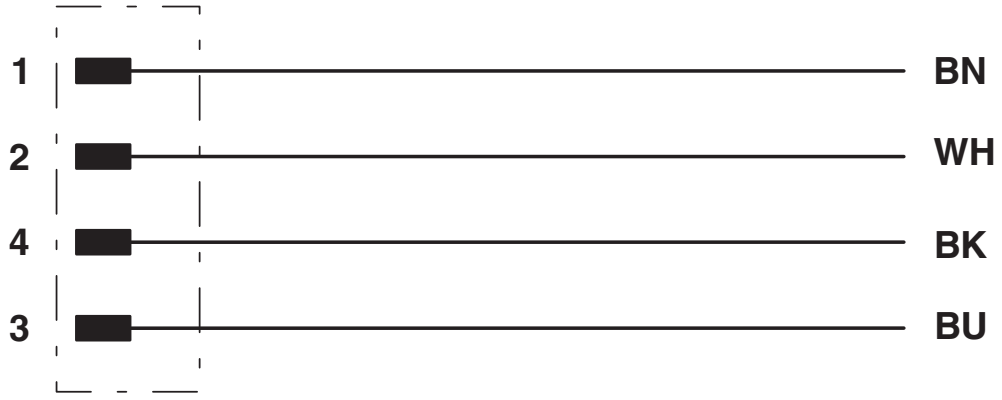

Diagram

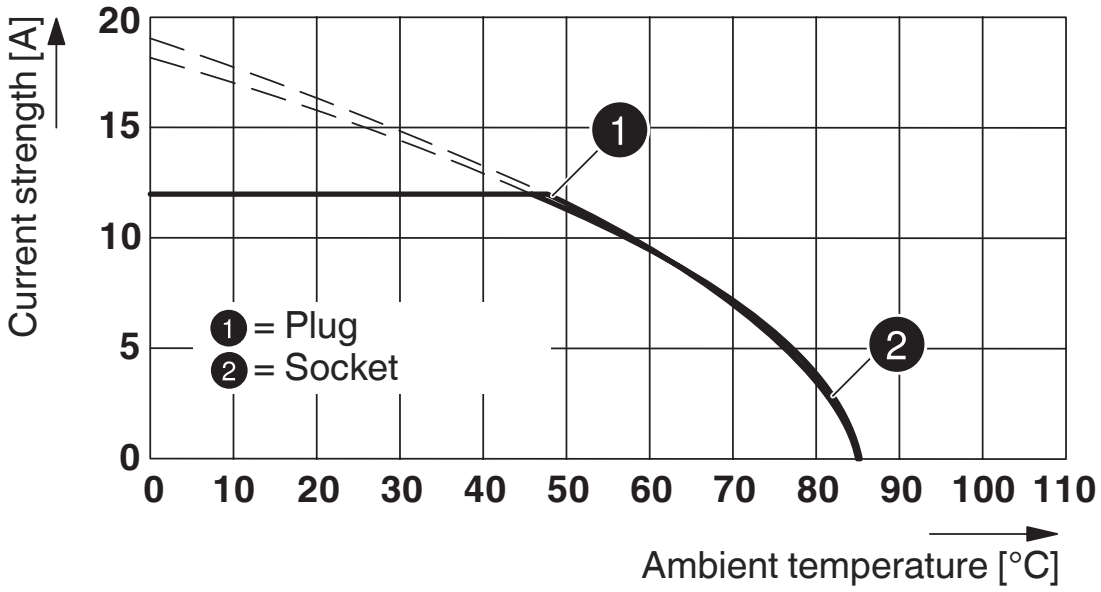
Current strength [A]
20
15
10
5
0
1
2
1 = Plug
2 = Socket
0 10 20 30 40 50 60 70 80 90 100 110
Ambient temperature [°C]

Approvals

To download certificates, visit the product detail page: https://www.phoenixcontact.com/us/products/1425057

UL Listed
Approval ID: E468743

cUL Listed
Approval ID: E468743

EAC-RoHS
Approval ID: RU D-DE.HB35.B.00387

cULus Listed

Classifications

ECLASS

ECLASS-11.0	27060311
ECLASS-12.0	27060311
ECLASS-13.0	27060327

ETIM

ETIM 9.0	EC001855

UNSPSC

UNSPSC 21.0	26121600

Environmental product compliance

EU RoHS

Fulfills EU RoHS substance requirements	Yes, No exemptions

China RoHS

Environment friendly use period (EFUP)	EFUP-E
	No hazardous substances above the limits

EU REACH SVHC

REACH candidate substance (CAS No.)	No substance above 0.1 wt%

Accessories

PROT M12 MS PWR - Screw plug

1092802

https://www.phoenixcontact.com/us/products/1092802



An M12 screw plug for the unoccupied M12 females of the M12 POWER connectors, boxes, and flush-type connectors

UCT-WMT (23X4) - Conductor marker

0801453

https://www.phoenixcontact.com/us/products/0801453



Conductor marker, Sheet, white, unlabeled, can be labeled with: TOPMARK NEO, TOPMARK LASER, BLUEMARK ID COLOR, BLUEMARK ID, BLUEMARK CLED, THERMOMARK PRIME, THERMOMARK CARD 2.0, THERMOMARK CARD, mounting type: insert, cable diameter range: 1.5 ... 35 mm, lettering field size: 23 x 4 mm, Number of individual labels: 30

UC-WMT (23X4) - Conductor marker

0819411

https://www.phoenixcontact.com/us/products/0819411



Conductor marker, Sheet, white, unlabeled, can be labeled with: BLUEMARK ID COLOR, BLUEMARK ID, BLUEMARK CLED, PLOTMARK, CMS-P1-PLOTTER, mounting type: insert, cable diameter range: 1.5 ... 35 mm, lettering field size: 23 x 4 mm, Number of individual labels: 24

US-WMT (23X4) - Cable marker

0828769

https://www.phoenixcontact.com/us/products/0828769



Cable marker, Card, white, unlabeled, can be labeled with: BLUEMARK ID COLOR, BLUEMARK ID, THERMOMARK PRIME, THERMOMARK CARD 2.0, THERMOMARK CARD, mounting type: slide-on, cable diameter range: 1.5 ... 35 mm, lettering field size: 23 x 4 mm, Number of individual labels: 56

WMTW (23X4)R - Cable marker

0831004

https://www.phoenixcontact.com/us/products/0831004



Cable marker, Roll, white, unlabeled, can be labeled with: THERMOMARK E.300 (D)/600 (D), THERMOMARK ROLL 2.0, THERMOMARK ROLL, THERMOMARK ROLL X1, THERMOMARK ROLLMASTER 300/600, THERMOMARK X1.2, mounting type: insert, cable diameter range: 1.5 ... 35 mm, lettering field size: 23 x 4 mm, Number of individual labels: 3000

WP-EC TPE HF 13,0 BK - Transition sleeve from hose to cable

3240975

https://www.phoenixcontact.com/us/products/3240975



Transition sleeve from hose to cable, material: TPE, color: black, flammability rating in acc. with UL 94: HB

WP-PA HF 13,0 BK - Protective hose

3240681

https://www.phoenixcontact.com/us/products/3240681



Protective hose, material: PA 6, UV-resistant: yes, flexible, degree of protection: IP68, color: black, flammability rating in acc. with UL 94: V0, inner diameter: 10 mm, Total length: 50 m

WP-PA HF-HB 13,0 BK - Protective hose

3240839

https://www.phoenixcontact.com/us/products/3240839



Protective hose, material: PA 6, UV-resistant: yes, flexible, degree of protection: IP68, color: black, flammability rating in acc. with UL 94: HB, inner diameter: 10 mm, Total length: 50 m

SAC BIT M12-D16 - Tool

1200305

https://www.phoenixcontact.com/us/products/1200305



Nut for assembling sensor/actuator cables with M12 connector and M12 connectors for assembly, knurl diameter: 16 mm, for 4 mm hexagonal drive

TSD 04 SAC - Torque screwdriver

1208429

https://www.phoenixcontact.com/us/products/1208429



Torque screwdriver, with preset torque of 0.4 Nm and 4 mm hexagonal drive for M12 connectors

TSD-M 1,2NM - Torque screwdriver

1212224

https://www.phoenixcontact.com/us/products/1212224



Torque screw driver, accuracy as per EN ISO 6789 standard, adjustable from 0. 3 - 1.2 Nm

TSD-M SAC-BIT ADAPTER - Adapter insert

1212600

https://www.phoenixcontact.com/us/products/1212600



Adapter bit for TSD-M...torque tools, E6.3-1/4" drive with 4 mm hexagon to accommodate SAC bits

B-STIFT - Marker pen

1051993

https://www.phoenixcontact.com/us/products/1051993



Marker pen, for manual labeling of unprinted Zack strips, smear-proof and waterproof, line thickness 0.5 mm

CUTFOX-S VDE - Diagonal cutter

1212207

https://www.phoenixcontact.com/us/products/1212207



Diagonal cutter for hard (piano wire) and soft wires, VDE 1000 V AC/1500 V DC tested

WIREFOX-D 16 - Stripping tool

1212173

https://www.phoenixcontact.com/us/products/1212173



Stripping tool, for stripping lines (specially for fiber optics lines) of Ø 4 - 16 mm

WIREFOX-D 40 - Stripping tool

1212161

https://www.phoenixcontact.com/us/products/1212161



Stripping tool, for stripping cables of 4.5 mm - 40 mm-Ø, insulation thickness of up to 4.5 mm, pivoting blade for round, lengthwise, and spiral cuts

WIREFOX 10 - Stripping tool

1212150

https://www.phoenixcontact.com/us/products/1212150



Stripping tool, for cables and conductors from 0.02 - 10 mm^2, self-adjusting, stripping length of up to 18 mm, cutting capacity of up to 10 mm^2 stranded/1.5 mm^2 solid, replaceable stripping blade

Phoenix Contact 2024 © - all rights reserved
https://www.phoenixcontact.com

Phoenix Contact USA
586 Fulling Mill Road
Middletown, PA 17057, United States
(+717) 944-1300
info@phoenixcon.com