SAC-5P-M12Y/2XM12FS VP S21 - Y distributor

1514029

https://www.phoenixcontact.com/us/products/1514029

Please be informed that the data shown in this PDF document is generated from our online catalog. Please find the complete data in the user documentation. Our general terms of use for downloads are valid.



Y distributor, 5-position, unshielded, Plug straight M12, coding: A, on Socket straight M12, coding: A and Socket straight M12, coding: A, Parallel distributor

Commercial data

Item number	1514029
Packing unit	5 pc
Minimum order quantity	5 pc
Sales key	BF10
Product key	BF1GAB
Catalog page	Page 253 (C-2-2019)
GTIN	4017918943509
Weight per piece (including packing)	29.41 g
Weight per piece (excluding packing)	26.78 g
Customs tariff number	85366990
Country of origin	PL

Technical data

Product properties

Product type	Y-distributor
Number of positions	5
No. of cable outlets	2
Shielded	no
Coding	A
Thread type	M12

Insulation characteristics

Overvoltage category	II
Degree of pollution	3

Electrical properties

Insulation resistance	≥ 100 MΩ
Nominal voltage U_N	48 V AC
	60 V DC
Nominal current I_N	4 A

Signaling

Status display	No
Status display present	No

Dimensions

Dimensional drawing	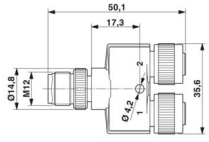
Width	39 mm
Height	16 mm
Length	50.1 mm
Center distance	21 mm

Material specifications

Flammability rating according to UL 94	HB
Seal material	NBR
Material of grip body	TPU, hardly inflammable, self-extinguishing
Contact material	CuZn
Contact surface material	Ni/Au
Contact carrier material	TPU GF
Material for screw connection	Zinc die-cast, nickel-plated

Connector

Connection 1

Type	Plug straight M12
Coding type	A

Connection 2

Type	Socket straight M12
Coding type	A

Connection 3

Type	Socket straight M12
Coding type	A

Mechanical properties

Mechanical data

Insertion/withdrawal cycles	≥ 100

Environmental and real-life conditions

Ambient conditions

Degree of protection	IP65
	IP67
Ambient temperature (operation)	-25 °C ... 90 °C (Plug / socket)

Standards and regulations

Standard designation	M12 connector
Standards/specifications	IEC 61076-2-101

Drawings

Circuit diagram

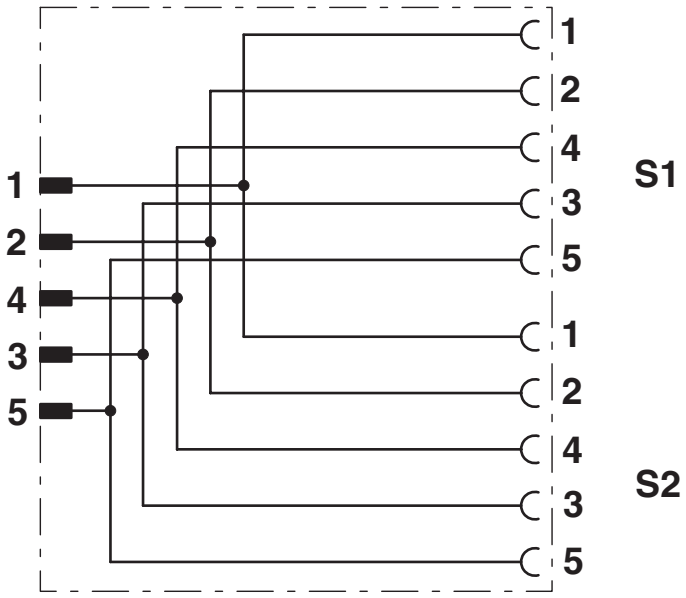

Dimensional drawing

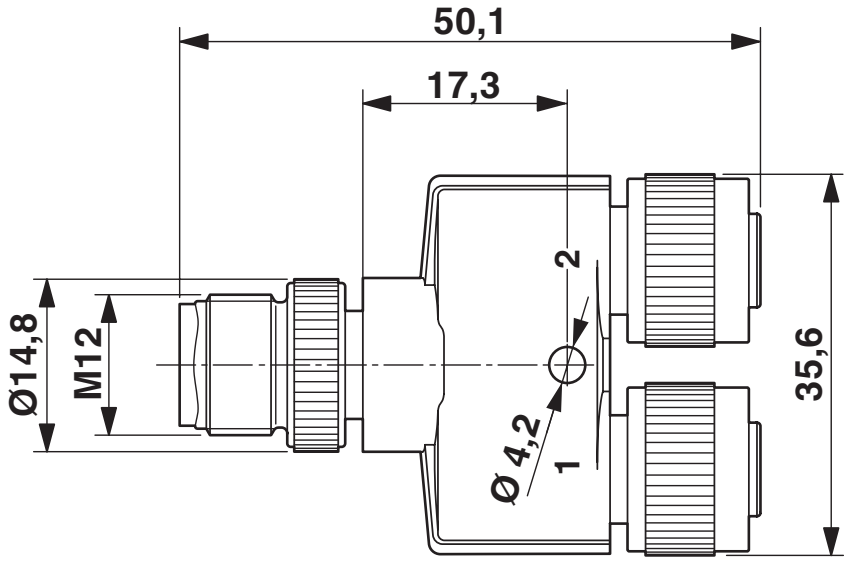

Plug M12 x 1, Y distributor, inner gauge of 21 mm

Schematic diagram

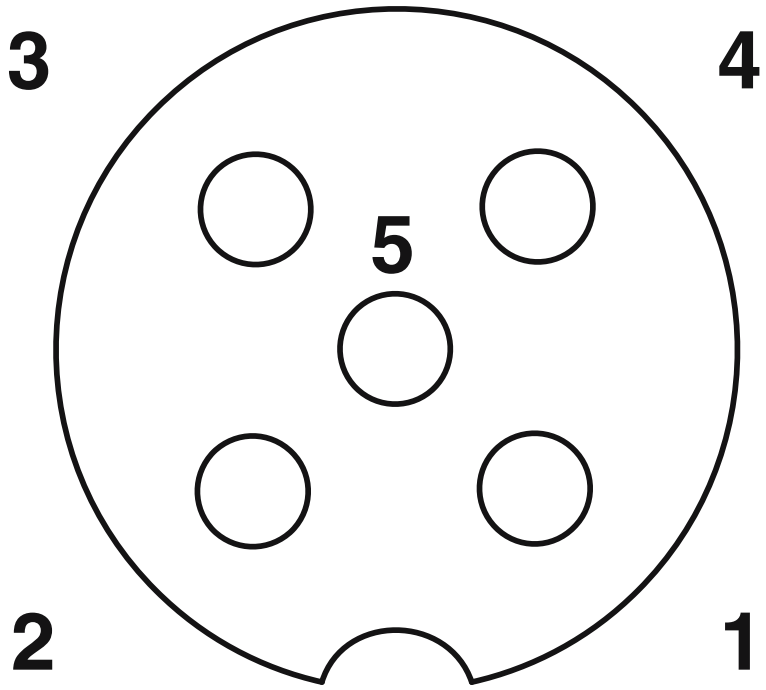

Pin assignment M12 socket, 5-pos., A-coded, socket side view

Schematic diagram

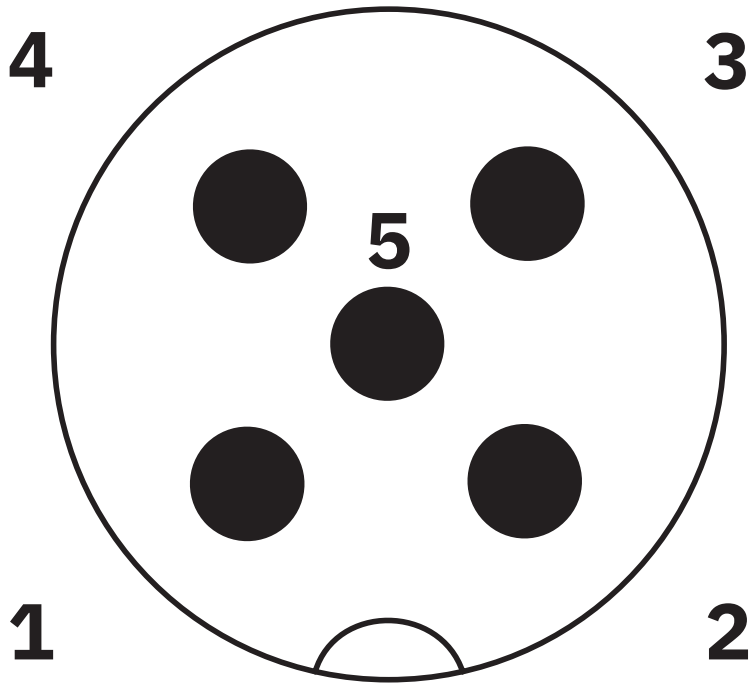

Pin assignment M12 male connector, 5-pos., A-coded, male side

Schematic diagram

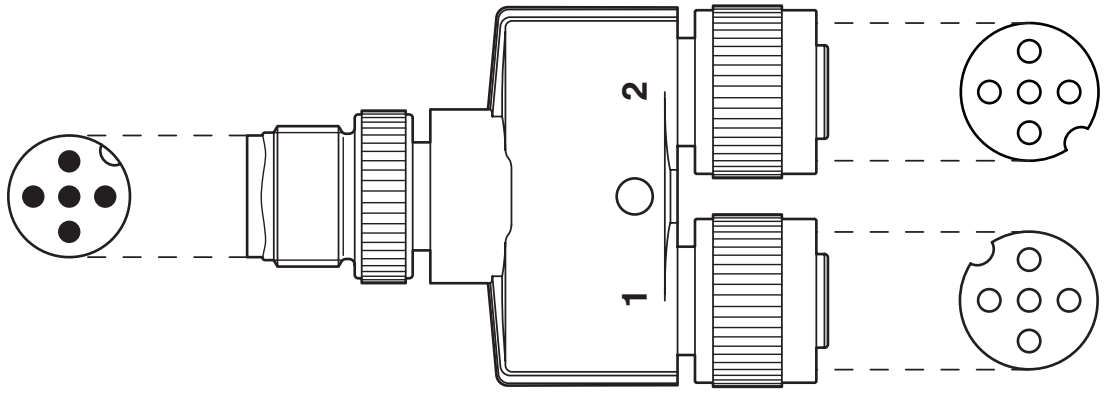

Layout of connector pin assignments

Approvals

To download certificates, visit the product detail page: https://www.phoenixcontact.com/us/products/1514029

EAC
Approval ID: RU C-DE.AI30.B.01102

EAC
Approval ID: RU C-DE.BL08.B.00511

UL Listed
Approval ID: E221474

	Nominal voltage U_N	Nominal current I_N	Cross section AWG	Cross section mm^2
	30 V	4 A	-	-

cUL Listed
Approval ID: E221474

	Nominal voltage U_N	Nominal current I_N	Cross section AWG	Cross section mm^2
	30 V	4 A	-	-

cULus Listed

Classifications

ECLASS

ECLASS-11.0	27440106
ECLASS-12.0	27440106
ECLASS-13.0	27440106

ETIM

ETIM 9.0	EC002925

UNSPSC

UNSPSC 21.0	31251500

Environmental product compliance

EU RoHS

Fulfills EU RoHS substance requirements	Yes, No exemptions

China RoHS

Environment friendly use period (EFUP)	EFUP-E
	No hazardous substances above the limits

EU REACH SVHC

REACH candidate substance (CAS No.)	No substance above 0.1 wt%

Accessories

PROT-M12 - Screw plug

1680539

https://www.phoenixcontact.com/us/products/1680539



An M12 screw plug for the unoccupied M12 sockets of the sensor/actuator cable, boxes and flush-type connectors

PROT-M12 FS - Sealing cap

1560251

https://www.phoenixcontact.com/us/products/1560251



M12 sealing cap for unoccupied M12 plugs of the sensor/actuator cable, flush-type plugs and I/O devices in the field

PROT-M12 MS-PA-CHAIN - Screw plug

1430899

https://www.phoenixcontact.com/us/products/1430899

M12 sealing cap with fixing band, for sensor cables, for free M12 sockets



PROT-M12 FS-PA-CHAIN - Sealing cap

1430873

https://www.phoenixcontact.com/us/products/1430873

M12 sealing cap made of plastic with fixing band, for sensor cables, for free M12 plugs



TSD 04 SAC - Torque screwdriver

1208429

https://www.phoenixcontact.com/us/products/1208429



Torque screwdriver, with preset torque of 0.4 Nm and 4 mm hexagonal drive for M12 connectors

SAC BIT M12-D15 - Tool

1208432

https://www.phoenixcontact.com/us/products/1208432



Nut for assembling sensor/actuator cables with M12 connector and M12 connectors for assembly, with a knurl diameter of 15 mm, for 4 mm hexagonal drive

Phoenix Contact 2024 © - all rights reserved
https://www.phoenixcontact.com

Phoenix Contact USA
586 Fulling Mill Road
Middletown, PA 17057, United States
(+717) 944-1300
info@phoenixcon.com