NEARFI D ETH R - Inductive coupler

1234234

https://www.phoenixcontact.com/us/products/1234234

Please be informed that the data shown in this PDF document is generated from our online catalog. Please find the complete data in the user documentation. Our general terms of use for downloads are valid.

NearFi, remote coupler for contactless real-time Ethernet transmission in the centimeter range, 100 Mbps, full duplex, M12 connection technology, IP65 type of protection. A base coupler is required for operation.

Product description

With the robust NEARFI-D… NearFi couplers, you can transmit real-time Ethernet data (100 Mbps, full duplex) without contact across a distance in the centimeter range. Furthermore, the specially developed NearFi technology enables latency-free and protocol-independent Ethernet communication. At the same time, the limited wireless range of just a few centimeters also ensures security and permits parallel applications in the tightest of spaces. You can therefore replace wear-sensitive and maintenance-intensive connections and reduce downtimes in your systems.

Your advantages

- Contactless - and therefore no wear and no maintenance
- Protocol-independent, latency-free Ethernet real-time communication with 100 Mbps (full duplex)
- All-round visible diagnostics with light ring on the housing
- High degree of mounting freedom with flexible proximity options
- Plug and Play - as easy as a plug
- Degree of protection IP65

Commercial data

Item number	1234234
Packing unit	1 pc
Minimum order quantity	1 pc
Sales key	DN26
Product key	DNC693
GTIN	4063151338107
Weight per piece (including packing)	523 g
Weight per piece (excluding packing)	480 g
Customs tariff number	85176200
Country of origin	DE

Technical data

Product properties

Product type	Inductive coupler
Application	Ethernet
MTTF	239 Years (SN 29500 standard, temperature 25°C, operating cycle 21%)
	155 Years (SN 29500 standard, temperature 40°C, operating cycle 34.25%)
	81 Years (SN 29500 standard, temperature 40°C, operating cycle 100%)

Insulation characteristics

Overvoltage category	II
Pollution degree	2

Electrical properties

Maximum power dissipation for nominal condition	4.68 W

Supply

Supply voltage range	19 V DC ... 30 V DC
Typical current consumption	≤ 195 mA (at 24 V DC, at 25 °C)
Protective circuit	Transient protection, polarity protection

Connection data

Supply

Connection method	M12 male, A-coded

Interfaces

Data: Ethernet interface, 100Base-T(X) in accordance with IEEE 802.3

Transmission speed	100 Mbps
Connection method	M12 female, D-coded
Note on the connection method	Auto negotiation and autocrossing, fast startup (FSU, <500 ms)
No. of channels	1
Transmission length	100 m (shielded twisted pair)
Transmission medium	Copper
Protocols supported	Protocol transparent: PROFINET, PROFINET IRT, PROFIsafe, EtherCAT®, Modbus/TCP, Powerlink, TSN, etc.

Inductive

Switch-on time	< 450 ms (ETH Full Duplex operating mode)
Range	min. 0 mm
	typ. 20 mm (at 65°C)
	typ. 40 mm (at 25 °C)
Wireless modules that can be connected	1 (Base coupler)

Wireless

Wireless modules that can be connected	1 (Base coupler)
Frequency	60 GHz
Frequency range	57 GHz ... 64 GHz (Data transmission)
Transmission power	< 10 mW (EIRP)

Dimensions

Dimensional drawing	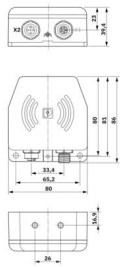
Width	80 mm
Height	86 mm
Depth	39 mm

Material specifications

Color (Housing)	black (RAL 9005)
Material (Enclosure)	PBT
	Die-cast zinc
Flammability rating according to UL 94	V0

Cable/line

Other resistance	Resistant to welding splashes

Environmental and real-life conditions

Ambient conditions

Degree of protection	IP65 (Manufacturer's declaration)
Impact strength	IK06
Ambient temperature (operation)	-20 °C ... 65 °C (observe derating)
Ambient temperature (storage/transport)	-40 °C ... 85 °C
Altitude	2000 m
Permissible humidity (operation)	10 % ... 95 %
Permissible humidity (storage/transport)	10 % ... 95 %
Air pressure (operation)	80 kPa ... 108 kPa (up to 2000 m above sea level)
Air pressure (storage/transport)	66 kPa ... 108 kPa (up to 3500 m above sea level)

Approvals

CE

Certificate	CE-compliant

Wireless approval, Europe

Note	RED 2014/53/EU

UL, USA

Identification	UL 61010 Listed
	UL 61010-2-201, 2nd Edition
	UL 61010-1, 3rd Edition
Certificate	E238705

UL, Canada

Identification	cUL 61010 Listed
	CSA C22.2 NO. 61010-2-201:18, 2nd Edition
	CSA C22.2 NO. 61010-1, 3rd Edition
Certificate	E238705

Wireless approval USA, FCC

Certificate	YG3DETHR

Wireless approval Canada, IC

Certificate	4720B-DETHR

Wireless approval Japan, MIC

Identification	006-001057

KC approval for South Korea

Certificate	R-R-PCK-1234232

CC-Link IE TSN

Identification	Class A

EMC data

Electromagnetic compatibility	Conformance with EMC Directive 2014/30/EU
Conducted noise emission	EN 55032 Class A, industrial applications

Electrostatic discharge

Standards/regulations	EN 61000-4-2

Electrostatic discharge

Contact discharge	± 4 kV (Test Level 2)
Discharge in air	± 8 kV (Test Level 3)
Comments	Criterion B

Electromagnetic HF field

Standards/regulations	EN 61000-4-3

Electromagnetic HF field

Frequency range	80 MHz ... 1 GHz (Test Level 3)
Field intensity	10 V/m
Comments	Criterion A

Fast transients (burst)

Standards/regulations	EN 61000-4-4

Fast transients (burst)

Input	± 2 kV (Test Level 3 - asymmetrical)
Output	± 2 kV (Test Level 3 - asymmetrical)
Signal	± 2 kV (Test Level 3 - asymmetrical)
Comments	Criterion B

Surge current load (surge)

Standards/regulations	EN 61000-4-5

Surge current load (surge)

Input	± 0.5 kV (Test Level 1 - symmetrical)
	± 1 kV (Test Level 2 - asymmetrical)
Output	± 1 kV (Test Level 2 - asymmetrical)
Signal	± 1 kV (Test Level 2 - asymmetrical)
Comments	Criterion B

Conducted interference

Standards/regulations	EN 61000-4-6

Conducted interference

Frequency range	0.15 MHz ... 80 MHz (Test Level 3 - asymmetrical)
Comments	Criterion A
Voltage	10 V (80% amplitude modulation with 1 kHz)

Emitted interference

Standards/regulations	EN 55016-2-3
Comments	Class A, industrial applications

Criteria

Criterion A	Normal operating behavior within the specified limits.
Criterion B	Temporary impairment to operational behavior that is corrected by the device itself.

Standards and regulations

Free from substances that could impair the application of coating	Yes
Other resistance	Resistant to welding splashes
Standards/regulations	EN 60204-1 (PELV)
Standard designation	Protective extra-low voltage

Mounting

Mounting type	Wall mounting
Assembly note	Observe derating
Mounting position	any

Drawings

Drilling plan/solder pad geometry

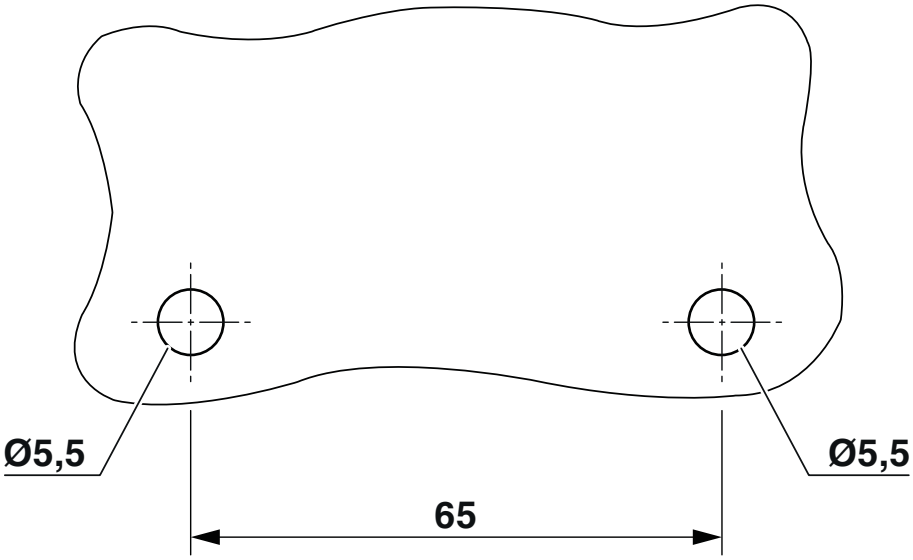

Drilling diagram

Schematic diagram

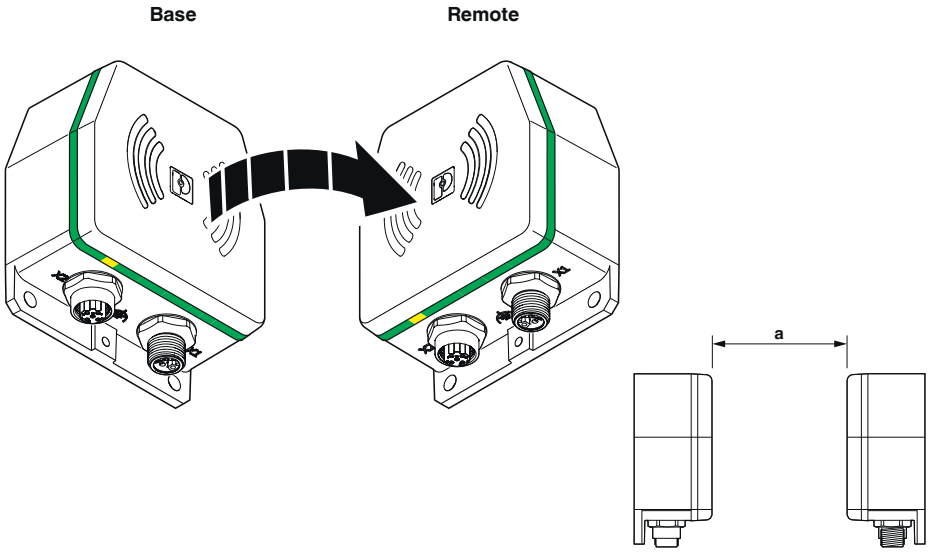

Method of operation

Block diagram

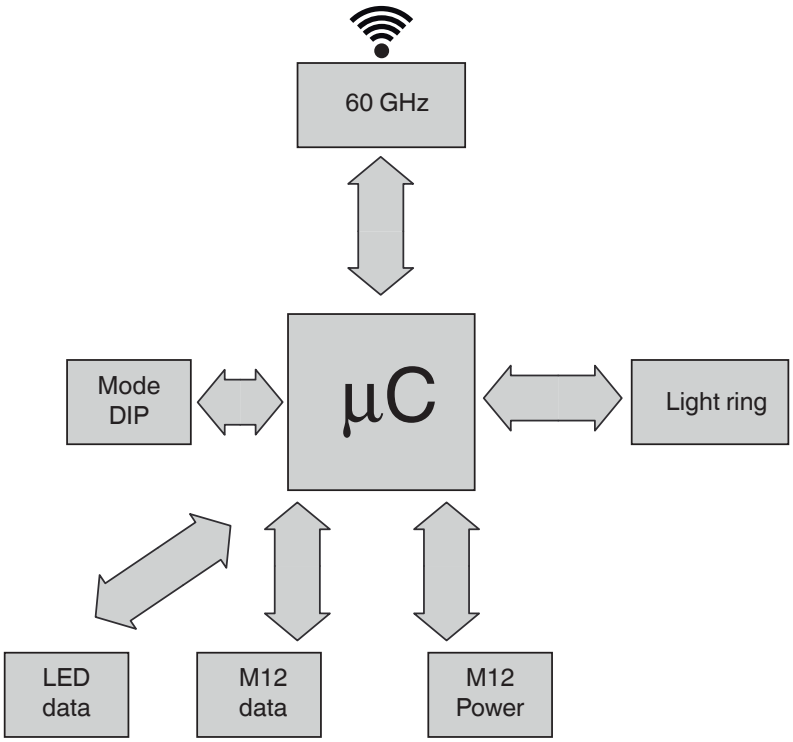

Basic circuit diagram

Drilling plan/solder pad geometry

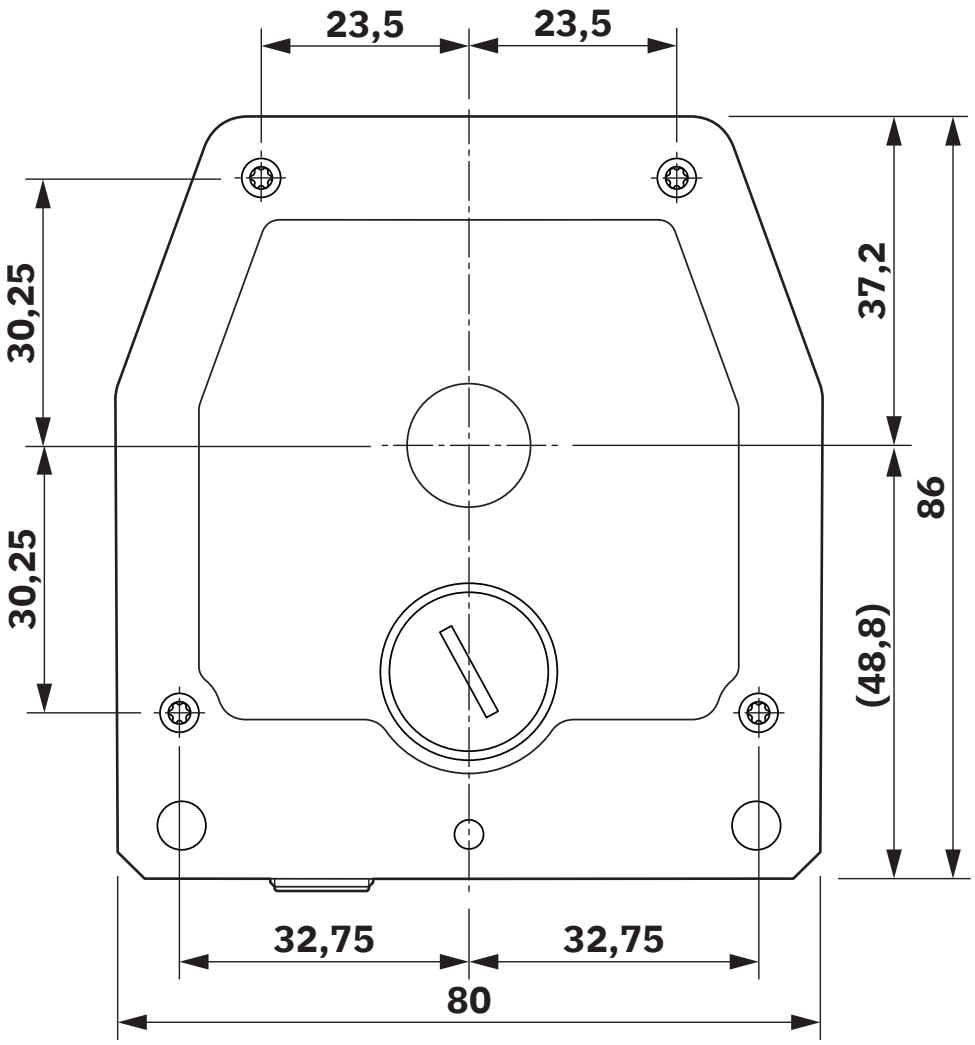

Centering template

Schematic diagram

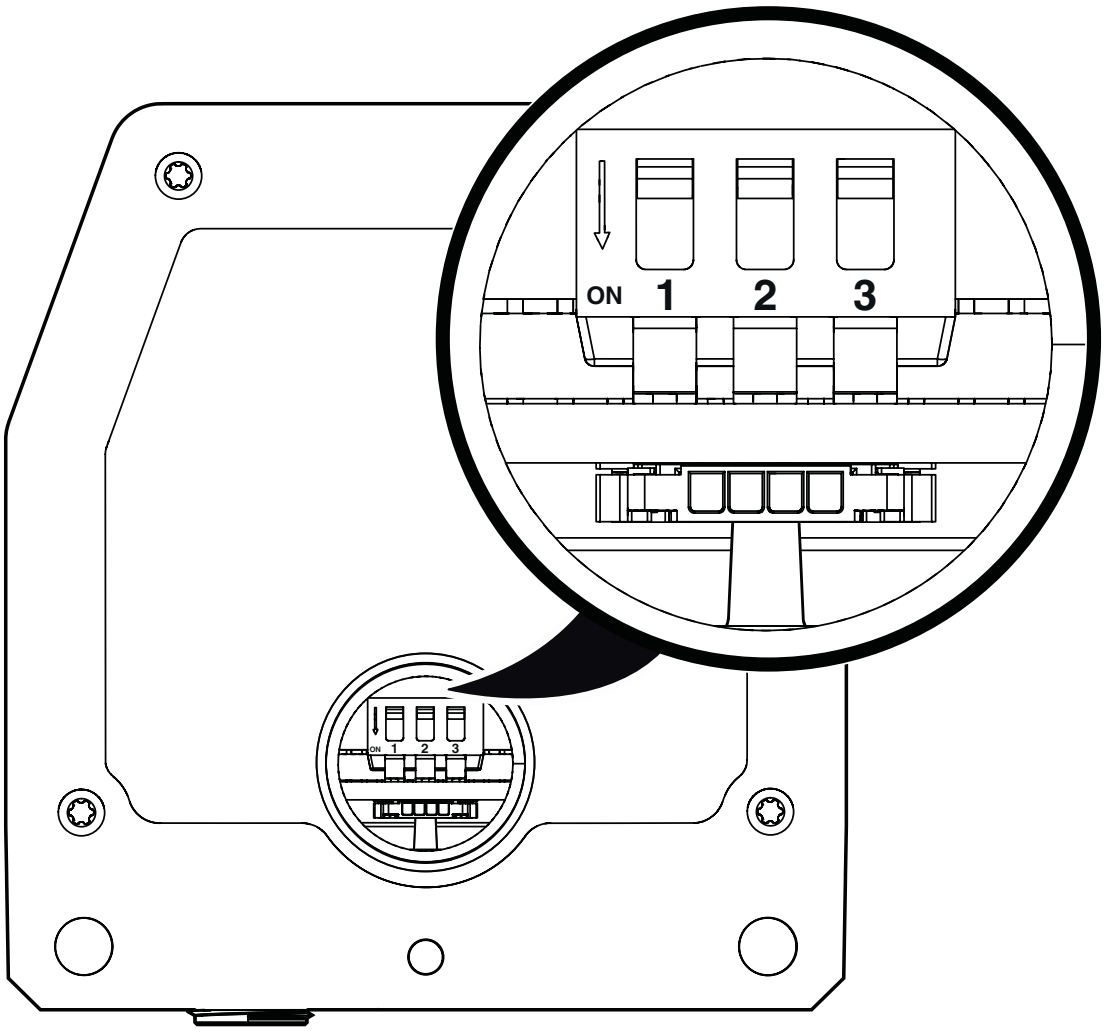

DIP switches

Dimensional drawing

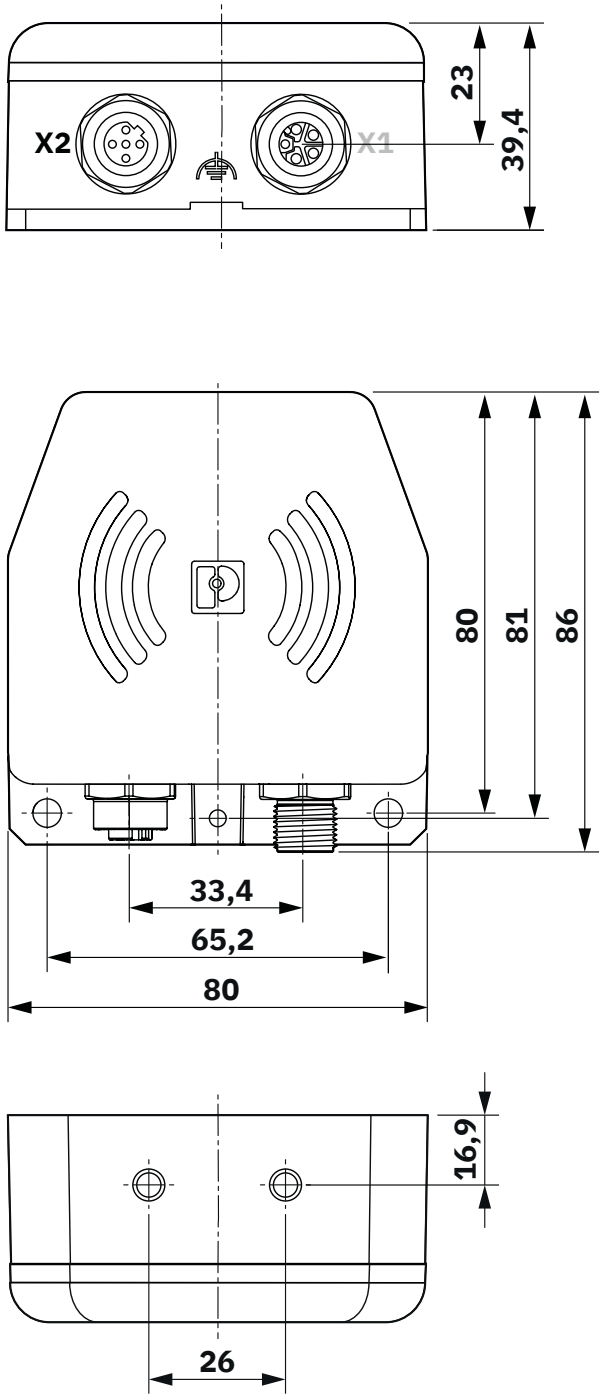

Dimensional drawing

Schematic diagram

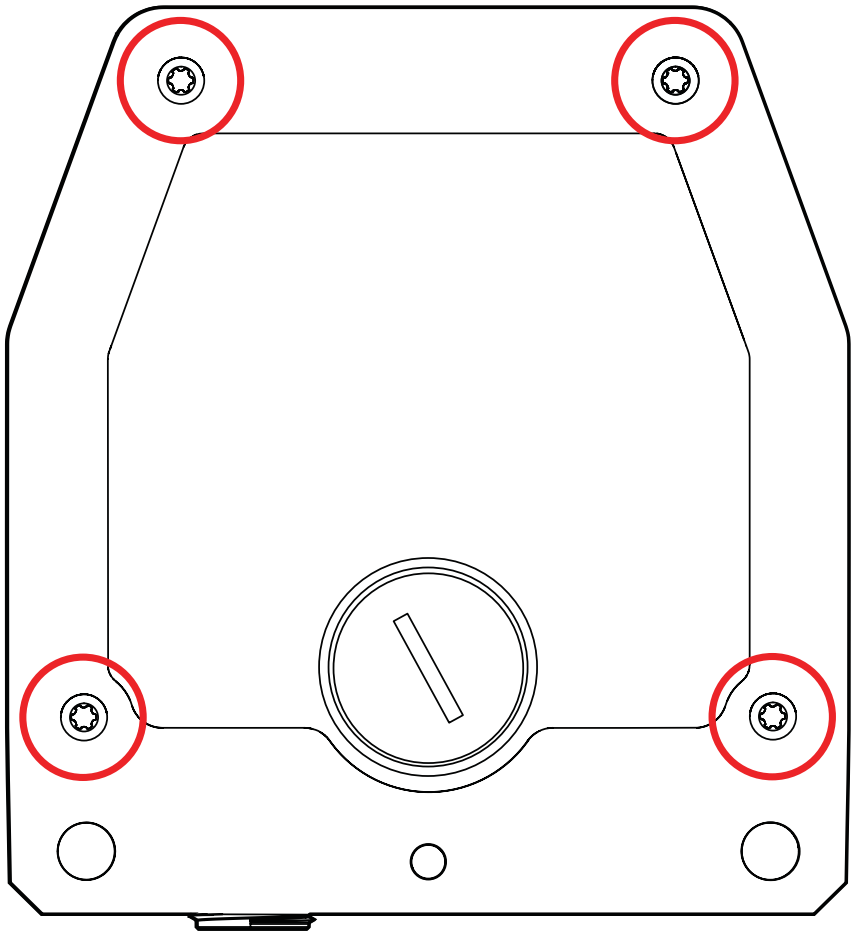

Mounting with four screws

Schematic diagram

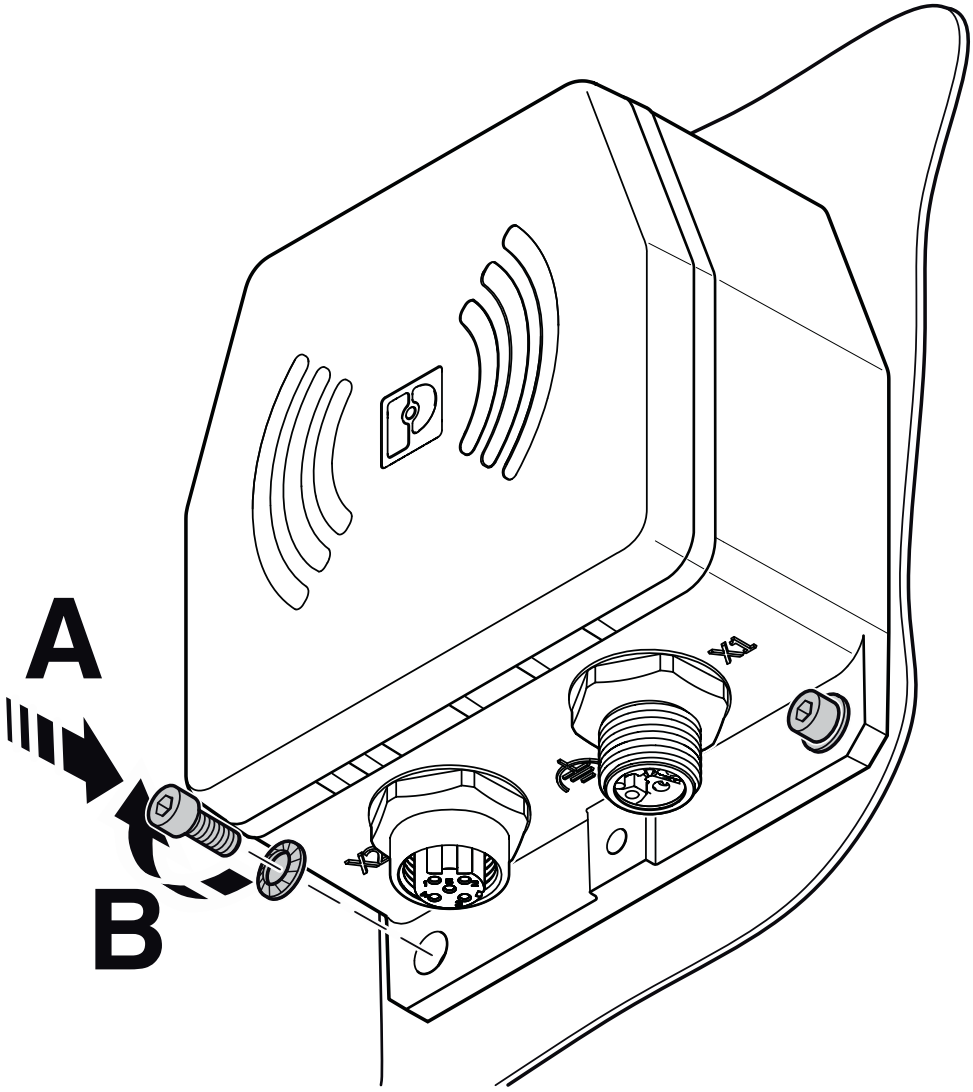

Mounting with two screws

Schematic diagram

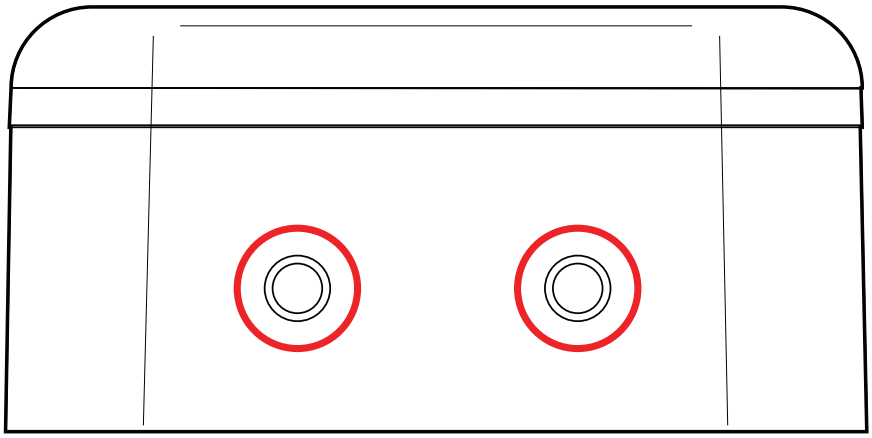

Mounting option

Schematic diagram

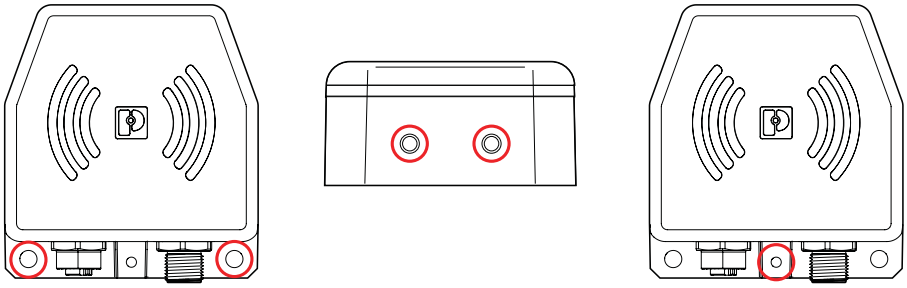

1 2 3

Options for functional grounding

Schematic diagram

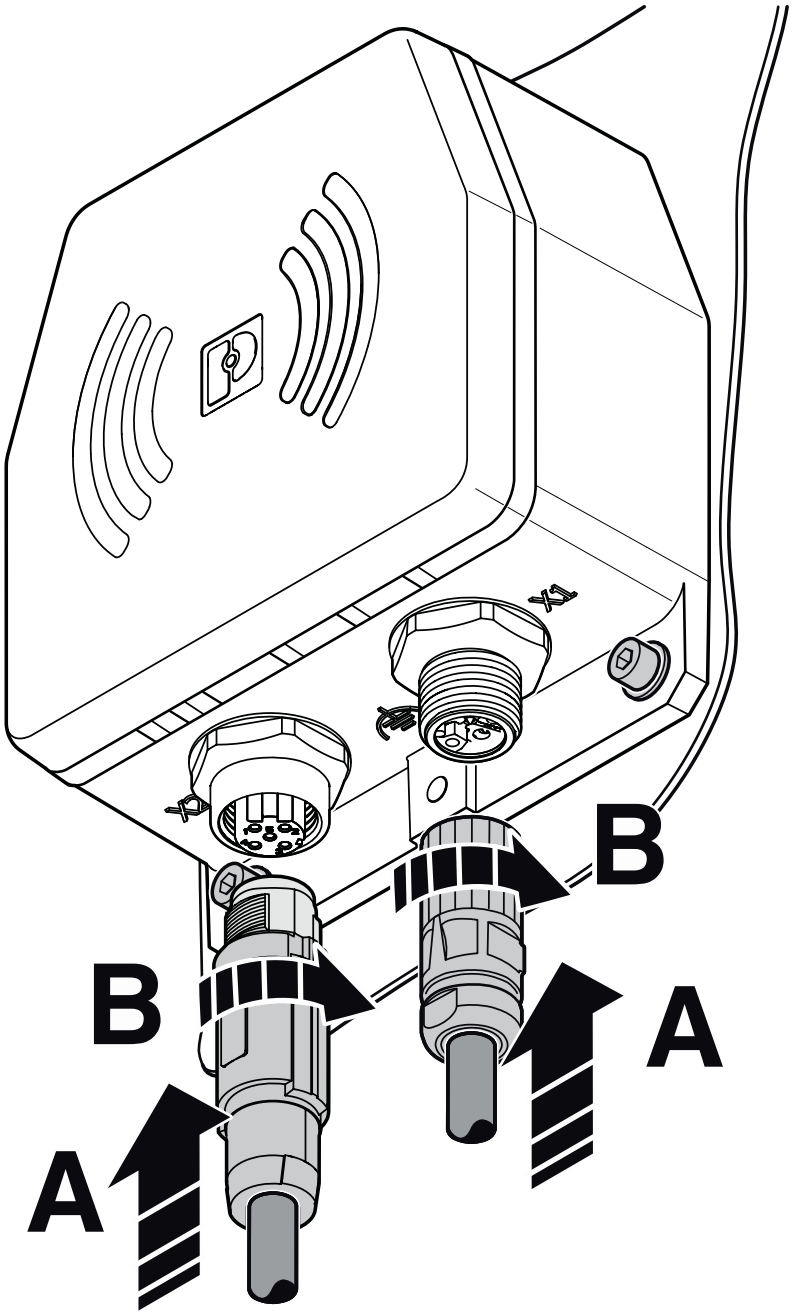

Connecting the cables

Schematic diagram

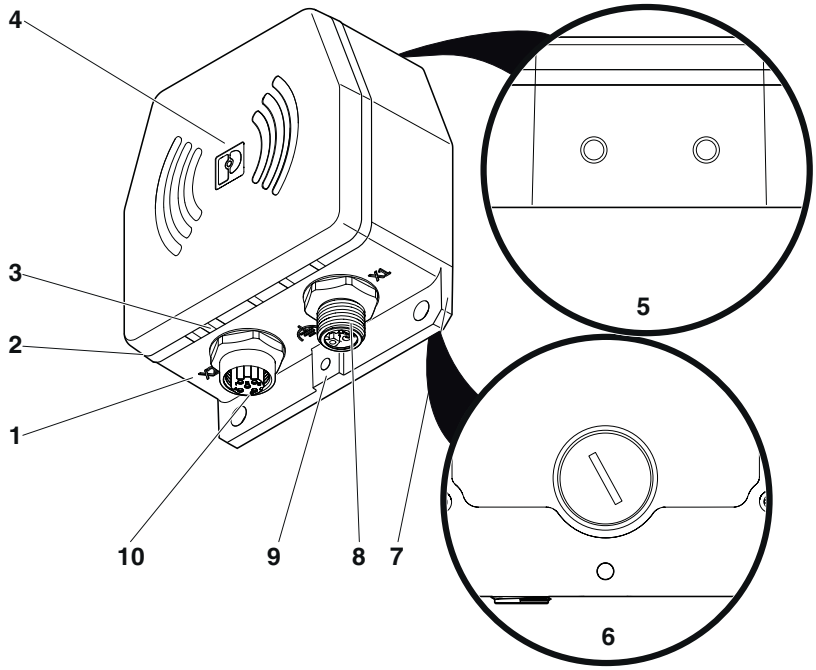

Function elements

Approvals

To download certificates, visit the product detail page: https://www.phoenixcontact.com/us/products/1234234

UL Listed
Approval ID: FILE E 238705

cUL Listed
Approval ID: FILE E 238705

MIC
Approval ID: 006-001057

FCC
Approval ID: YG3DETHR

Industry Canada
Approval ID: 4720B-DETHR

cULus Listed

Classifications

ECLASS

ECLASS-11.0	27040701
ECLASS-12.0	27040701
ECLASS-13.0	27040701

ETIM

ETIM 8.0	EC002540

Environmental product compliance

EU RoHS

Fulfills EU RoHS substance requirements	Yes
Exemption	6(c)

China RoHS

Environment friendly use period (EFUP)	EFUP-50
	An article-related China RoHS declaration table can be found in the download area for the respective article under "Manufacturer declaration". For all articles with EFUP-E, no China RoHS declaration table issued and required.

EU REACH SVHC

REACH candidate substance (CAS No.)	Lead(CAS: 7439-92-1)

Mandatory accessories

NEARFI D ETH B - Inductive coupler

1234232

https://www.phoenixcontact.com/us/products/1234232

NearFi, base coupler for contactless real-time Ethernet transmission in the centimeter range, 100 Mbps, full duplex, M12 connection technology, IP65 type of protection. A remote coupler is required for operation.

Accessories

SACC-M12MRD-4PL SH PN - Connector

1424684

https://www.phoenixcontact.com/us/products/1424684

Connector, PROFINET CAT5 (100 Mbps), 4-position, shielded, Plug angled M12, coding: D, Push-lock spring connection, knurl material: Zinc die-cast, nickel-plated, external cable diameter 4 mm ... 8 mm

SACC-M12MSD-4CON-PG 9-SH - Data connector

1521261

https://www.phoenixcontact.com/us/products/1521261

Data connector, Ethernet CAT5 (100 Mbps), 4-position, shielded, Plug straight M12, coding: D, Screw connection, knurl material: Brass, nickel-plated, cable gland Pg9, external cable diameter 6 mm ... 8 mm

NBC-M12MSD/.../... - Network cable

1408713

https://www.phoenixcontact.com/us/products/1408713

Network cable, Ethernet CAT5 (100 Mbps), 4-position, PUR halogen-free, water blue RAL 5021, shielded (Advanced Shielding Technology), Plug straight M12, coding: D / IP67, on free cable end, cable length: Free input (0.2 ... 40.0 m)

NBC-M12MSD-M12FSD/.../... - Network cable

1408692

https://www.phoenixcontact.com/us/products/1408692

Network cable, Ethernet CAT5 (100 Mbps), 4-position, PUR halogen-free, water blue RAL 5021, shielded (Advanced Shielding Technology), Plug straight M12, coding: D / IP67, on Socket straight M12, coding: D / IP67, cable length: Free input (0.2 ... 40.0 m)

NBC-M12MSD-M12MSD/.../... - Network cable

1408706

https://www.phoenixcontact.com/us/products/1408706

Network cable, Ethernet CAT5 (100 Mbps), 4-position, PUR halogen-free, water blue RAL 5021, shielded (Advanced Shielding Technology), Plug straight M12, coding: D / IP67, on Plug straight M12, coding: D / IP67, cable length: Free input (0.2 ... 40.0 m)

NBC-M12MSD-R4AC/.../... - Network cable

1408712

https://www.phoenixcontact.com/us/products/1408712

Network cable, Ethernet CAT5 (100 Mbps), 4-position, PUR halogen-free, water blue RAL 5021, shielded (Advanced Shielding Technology), Plug straight M12, coding: D / IP67, on Plug straight RJ45 / IP20, cable length: Free input (0.2 ... 40.0 m)

SACC-M12MRD-4Q SH - Data connector

1553624

https://www.phoenixcontact.com/us/products/1553624

Data connector, Ethernet CAT5 (100 Mbps), 4-position, shielded, Plug angled M12, coding: D, Insulation displacement connection, knurl material: Brass, nickel-plated, external cable diameter 4 mm ... 8 mm

SACC-M12MSD-4QO SH ETH - Data connector

1411066

https://www.phoenixcontact.com/us/products/1411066

Data connector, Ethernet CAT5 (100 Mbps), 4-position, halogen-free, shielded, Plug straight M12, coding: D, Insulation displacement connection, knurl material: Zinc die-cast, nickel-plated, external cable diameter 5 mm ... 9.7 mm

SACC-M12MSD-4QO SH PN - Data connector

1411068

https://www.phoenixcontact.com/us/products/1411068

Data connector, PROFINET CAT5 (100 Mbps), 4-position, halogen-free, shielded, Plug straight M12, coding: D, Insulation displacement connection, knurl material: Zinc die-cast, nickel-plated, external cable diameter 5 mm ... 9.7 mm

SACC-M12MRD-4Q SH PN - Data connector

1554539

https://www.phoenixcontact.com/us/products/1554539

Data connector, PROFINET CAT5 (100 Mbps), 4-position, shielded, Plug angled M12, coding: D, Insulation displacement connection, knurl material: Brass, nickel-plated, external cable diameter 4 mm ... 8 mm

NBC-M12MSD/ 1,0-93B - Network cable

1407495

https://www.phoenixcontact.com/us/products/1407495

Network cable, PROFINET CAT5 (100 Mbps), EtherCAT® CAT5 (100 Mbps), 4-position, PVC/PVC, green RAL 6018, shielded (Advanced Shielding Technology), Plug straight M12, coding: D / IP67, on free cable end, cable length: 1 m

NBC-M12MSD/ 2,0-93B - Network cable

1407496

https://www.phoenixcontact.com/us/products/1407496

Network cable, PROFINET CAT5 (100 Mbps), EtherCAT® CAT5 (100 Mbps), 4-position, PVC/PVC, green RAL 6018, shielded (Advanced Shielding Technology), Plug straight M12, coding: D / IP67, on free cable end, cable length: 2 m

NBC-M12MSD/ 5,0-93B - Network cable

1407497

https://www.phoenixcontact.com/us/products/1407497

Network cable, PROFINET CAT5 (100 Mbps), EtherCAT® CAT5 (100 Mbps), 4-position, PVC/PVC, green RAL 6018, shielded (Advanced Shielding Technology), Plug straight M12, coding: D / IP67, on free cable end, cable length: 5 m

NBC-M12MSD/10,0-93B - Network cable

1407498

https://www.phoenixcontact.com/us/products/1407498

Network cable, PROFINET CAT5 (100 Mbps), EtherCAT® CAT5 (100 Mbps), 4-position, PVC/PVC, green RAL 6018, shielded (Advanced Shielding Technology), Plug straight M12, coding: D / IP67, on free cable end, cable length: 10 m

NBC-M12MSD/ 1,0-93B/R4AC - Network cable

1407499

https://www.phoenixcontact.com/us/products/1407499

Network cable, PROFINET CAT5 (100 Mbps), EtherCAT® CAT5 (100 Mbps), 4-position, PVC/PVC, green RAL 6018, shielded (Advanced Shielding Technology), Plug straight M12, coding: D / IP67, on Plug straight RJ45 / IP20, cable length: 1 m

NBC-M12MSD/ 2,0-93B/R4AC - Network cable

1407500

https://www.phoenixcontact.com/us/products/1407500

Network cable, PROFINET CAT5 (100 Mbps), EtherCAT® CAT5 (100 Mbps), 4-position, PVC/PVC, green RAL 6018, shielded (Advanced Shielding Technology), Plug straight M12, coding: D / IP67, on Plug straight RJ45 / IP20, cable length: 2 m

NBC-M12MSD/ 5,0-93B/R4AC - Network cable

1407501

https://www.phoenixcontact.com/us/products/1407501

Network cable, PROFINET CAT5 (100 Mbps), EtherCAT® CAT5 (100 Mbps), 4-position, PVC/PVC, green RAL 6018, shielded (Advanced Shielding Technology), Plug straight M12, coding: D / IP67, on Plug straight RJ45 / IP20, cable length: 5 m

NBC-M12MSD/10,0-93B/R4AC - Network cable

1407502

https://www.phoenixcontact.com/us/products/1407502

Network cable, PROFINET CAT5 (100 Mbps), EtherCAT® CAT5 (100 Mbps), 4-position, PVC/PVC, green RAL 6018, shielded (Advanced Shielding Technology), Plug straight M12, coding: D / IP67, on Plug straight RJ45 / IP20, cable length: 10 m

NBC-M12MSD/ 1,0-93B/M12MSD - Network cable

1407524

https://www.phoenixcontact.com/us/products/1407524

Network cable, PROFINET CAT5 (100 Mbps), EtherCAT® CAT5 (100 Mbps), 4-position, PVC/PVC, green RAL 6018, shielded (Advanced Shielding Technology), Plug straight M12, coding: D / IP67, on Plug straight M12, coding: D / IP67, cable length: 1 m

NBC-M12MSD/ 2,0-93B/M12MSD - Network cable

1407525

https://www.phoenixcontact.com/us/products/1407525

Network cable, PROFINET CAT5 (100 Mbps), EtherCAT® CAT5 (100 Mbps), 4-position, PVC/PVC, green RAL 6018, shielded (Advanced Shielding Technology), Plug straight M12, coding: D / IP67, on Plug straight M12, coding: D / IP67, cable length: 2 m

NBC-M12MSD/ 5,0-93B/M12MSD - Network cable

1407526

https://www.phoenixcontact.com/us/products/1407526

Network cable, PROFINET CAT5 (100 Mbps), EtherCAT® CAT5 (100 Mbps), 4-position, PVC/PVC, green RAL 6018, shielded (Advanced Shielding Technology), Plug straight M12, coding: D / IP67, on Plug straight M12, coding: D / IP67, cable length: 5 m

NBC-M12MSD/10,0-93B/M12MSD - Network cable

1407527

https://www.phoenixcontact.com/us/products/1407527

Network cable, PROFINET CAT5 (100 Mbps), EtherCAT® CAT5 (100 Mbps), 4-position, PVC/PVC, green RAL 6018, shielded (Advanced Shielding Technology), Plug straight M12, coding: D / IP67, on Plug straight M12, coding: D / IP67, cable length: 10 m

VS-08-RJ45-5-Q/IP20 - RJ45 connector

1656725

https://www.phoenixcontact.com/us/products/1656725

RJ45 connector, design: RJ45, degree of protection: IP20, number of positions: 8, 1 Gbps, CAT5, material: Plastic, connection method: Insulation displacement connection, connection cross section: AWG 26- 23, cable outlet: straight, color: traffic grey A RAL 7042, Ethernet

SAC-5P- 2,0-186/FS SCO - Sensor/actuator cable

1518368

https://www.phoenixcontact.com/us/products/1518368

Sensor/actuator cable, 5-position, PUR, black-gray RAL 7021, free cable end, on Socket straight M12 SPEEDCON, coding: A, cable length: 2 m

SAC-5P- 5,0-186/FS SCO - Sensor/actuator cable

1518371

https://www.phoenixcontact.com/us/products/1518371

Sensor/actuator cable, 5-position, PUR, black-gray RAL 7021, free cable end, on Socket straight M12 SPEEDCON, coding: A, cable length: 5 m

SAC-5P-10,0-186/FS SCO - Sensor/actuator cable

1518384

https://www.phoenixcontact.com/us/products/1518384

Sensor/actuator cable, 5-position, PUR, black-gray RAL 7021, free cable end, on Socket straight M12 SPEEDCON, coding: A, cable length: 10 m

SAC-5P-15,0-186/FS SCO - Sensor/actuator cable

1518397

https://www.phoenixcontact.com/us/products/1518397

Sensor/actuator cable, 5-position, PUR, black-gray RAL 7021, free cable end, on Socket straight M12 SPEEDCON, coding: A, cable length: 15 m

SACC-M12FS-5CON-PG9-M - Connector

1681486

https://www.phoenixcontact.com/us/products/1681486

Connector, Universal, 5-position, Socket straight M12, coding: A, Screw connection, knurl material: Zinc die-cast, nickel-plated, cable gland Pg9, external cable diameter 6 mm ... 8 mm

SACC-M12FR-5CON-PG9-M - Connector

1681499

https://www.phoenixcontact.com/us/products/1681499

Connector, Universal, 5-position, Socket angled M12, coding: A, Screw connection, knurl material: Zinc die-cast, nickel-plated, cable gland Pg9, external cable diameter 6 mm ... 8 mm

SAC-5P-MS/ 1,0-186/FS SCO - Sensor/actuator cable

1518423

https://www.phoenixcontact.com/us/products/1518423

Sensor/actuator cable, 5-position, PUR, black-gray RAL 7021, Plug straight M12 SPEEDCON, coding: A, on Socket straight M12 SPEEDCON, coding: A, cable length: 1 m

SAC-5P-MS/ 2,0-186/FS SCO - Sensor/actuator cable

1518436

https://www.phoenixcontact.com/us/products/1518436

Sensor/actuator cable, 5-position, PUR, black-gray RAL 7021, Plug straight M12 SPEEDCON, coding: A, on Socket straight M12 SPEEDCON, coding: A, cable length: 2 m

SAC-5P-MS/ 5,0-186/FS SCO - Sensor/actuator cable

1518449

https://www.phoenixcontact.com/us/products/1518449

Sensor/actuator cable, 5-position, PUR, black-gray RAL 7021, Plug straight M12 SPEEDCON, coding: A, on Socket straight M12 SPEEDCON, coding: A, cable length: 5 m

SAC-5P-MS/10,0-186/FS SCO - Sensor/actuator cable

1518452

https://www.phoenixcontact.com/us/products/1518452

Sensor/actuator cable, 5-position, PUR, black-gray RAL 7021, Plug straight M12 SPEEDCON, coding: A, on Socket straight M12 SPEEDCON, coding: A, cable length: 10 m

SAC-5P-MS/15,0-186/FS SCO - Sensor/actuator cable

1518465

https://www.phoenixcontact.com/us/products/1518465

Sensor/actuator cable, 5-position, PUR, black-gray RAL 7021, Plug straight M12 SPEEDCON, coding: A, on Socket straight M12 SPEEDCON, coding: A, cable length: 15 m

PROT-M12 - Screw plug

1680539

https://www.phoenixcontact.com/us/products/1680539

An M12 screw plug for the unoccupied M12 sockets of the sensor/actuator cable, boxes and flush-type connectors

Phoenix Contact 2024 © - all rights reserved
https://www.phoenixcontact.com

Phoenix Contact USA
586 Fulling Mill Road
Middletown, PA 17057, United States
(+717) 944-1300
info@phoenixcon.com