TTC-6P-3-HF-F-M-12DC-UT-I - Surge protection device

2906786

https://www.phoenixcontact.com/us/products/2906786

Please be informed that the data shown in this PDF document is generated from our online catalog. Please find the complete data in the user documentation. Our general terms of use for downloads are valid.



Surge protection, consisting of protective plug and base element, with integrated status indicator and knife disconnection for three signal wires with common reference potential. For HF applications and telecommunications interfaces without supply voltage. Indirect grounding via gas discharge tube, EX e approval for zone 2. Can be used in safety-related circuits up to SIL 3.

Your advantages

- Space-saving and cost-saving with a narrow overall width of just 6 mm
- Continuous monitoring of protective devices, plus mechanical status indicator with optional remote signaling
- Finding the right product for all possible requirements in MCR applications is easy, thanks to the complete range of products with customized features
- Easy testing and documentation with CHECKMASTER 2 with pluggable protective modules
- The signal is not influenced during maintenance work, thanks to the impedance-neutral insertion and removal of protective plugs

Commercial data

Item number	2906786
Packing unit	1 pc
Minimum order quantity	1 pc
Sales key	CL23
Product key	CL2161
Catalog page	Page 171 (C-4-2019)
GTIN	4055626135434
Weight per piece (including packing)	57.9 g
Weight per piece (excluding packing)	57.6 g
Customs tariff number	85363010
Country of origin	DE

Technical data

Product properties

Product type	Surge protection for information technology
Product family	TERMITRAB complete
IEC test classification	C1
	C2
	C3
	D1
Type	DIN rail module, two-section, divisible

Insulation characteristics

Overvoltage category	III
Pollution degree	2

Electrical properties

Nominal voltage U_N	12 V DC

Connection data

Connection method	Screw connection
Screw thread	M3
Tightening torque	0.5 Nm ... 0.6 Nm
Conductor cross section flexible	0.2 mm² ... 2.5 mm²
Conductor cross section rigid	0.2 mm² ... 4 mm²
Conductor cross section AWG	24 ... 12

Ex data

Maximum input current	600 mA (T4 / ≤ 30 °C)
	500 mA (T4 / > 30 °C ... ≤ 50 °C)
	400 mA (T4 / > 50 °C ... ≤ 70 °C)
Maximum input voltage	15 V DC
Altitude	≤ 2000 m (amsl)
Ambient temperature (operation)	-40 °C ... 70 °C (T4)

Dimensions

Dimensional drawing	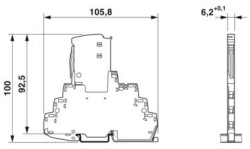
Width	6.2 mm +0.1 mm
Height	105.8 mm
Depth	100 mm (incl. DIN rail 7.5 mm)

Material specifications

Color (Base element)	gray (RAL 7042)
Color (Male connector)	light grey (RAL 7035)
Flammability rating according to UL 94	V-0
Insulating material	PBT
Housing material	PBT

Mechanical properties

Mechanical data

Open side panel	No

Protective circuit

Direction of action	Line-Line & Line-Signal Ground/Shield & optional Signal Ground/Shield-Earth Ground
Maximum continuous voltage U_C	15 V DC
	10 V AC
Rated current	600 mA (56 °C)
Operating effective current I_C at U_C	≤ 100 µA
Residual current I_{PE}	≤ 1 µA
Nominal discharge current I_n (8/20) µs (line-line)	5 kA
Nominal discharge current I_n (8/20) µs (line-ground)	5 kA
Nominal discharge current I_n (8/20) µs (line-signal ground)	5 kA
Pulse discharge current I_{imp} (10/350) µs (line-line)	0.5 kA
Pulse discharge current I_{imp} (10/350) µs (line-earth)	0.5 kA
Pulse discharge current I_{imp} (10/350) µs (line-signalground)	0.5 kA
Total discharge current I_{total} (8/20) µs	10 kA
Voltage protection level U_p (line-line)	≤ 145 V (C1 - 1 kV / 500 A)
	≤ 260 V (C2 - 10 kV / 5 kA)
	≤ 25 V (C3 - 25 A)
	≤ 30 V (C3 - 100 A)
Voltage protection level U_p (line-earth)	≤ 750 V (C1 - 1 kV / 500 A)
	≤ 750 V (C2 - 10 kV / 5 kA)
	≤ 1.1 kV (C3 - 25 A)
	≤ 1.2 kV (C3 - 100 A)
Voltage protection level U_p (line-signalground)	≤ 80 V (C1 - 1 kV / 500 A)
	≤ 95 V (C2 - 10 kV / 5 kA)
	≤ 25 V (C3 - 25 A)
	≤ 30 V (C3 - 100 A)
Voltage protection level U_p static (line-line)	≤ 40 V (C1 - 1 kV / 500 A)
	≤ 95 V (C2 - 10 kV / 5 kA)
Voltage protection level U_p static (line-earth)	≤ 750 V (C1 - 1 kV / 500 A)
	≤ 750 V (C2 - 10 kV / 5 kA)
Voltage protection level U_p static (line-signalground)	≤ 40 V (C1 - 1 kV / 500 A)

	≤ 95 V (C2 - 10 kV / 5 kA)
Response time t_A (line-line)	≤ 1 ns
Response time t_A (line-earth)	≤ 100 ns
Response time t_A (line-signalground)	≤ 1 ns
Input attenuation aE, sym.	typ. 0.3 dB (≤ 8.7 MHz / 150 Ω)
Input attenuation aE, asym.	typ. 0.3 dB (≤ 10.5 MHz / 150 Ω)
Cut-off frequency fg (3 dB), sym. in 150 Ω system	typ. 60 MHz
Cut-off frequency fg (3 dB), asym. (signal ground) in 150 Ω system	typ. 60 MHz
Capacity (Core-Core)	typ. 32 pF
Capacity (line-signalground)	typ. 32 pF
Resistance per path	1.65 Ω ±20 %
Surge protection fault message	optical
Max. required back-up fuse	630 mA (FF)
Impulse durability (line-line)	C1 - 1 kV / 500 A
	C2 - 10 kV / 5 kA
	C3 - 100 A
Impulse durability (line-earth)	C1 - 1 kV / 500 A
	C2 - 10 kV / 5 kA
	C3 - 100 A
	D1 - 500 A
Impulse durability (line-signalground)	C1 - 1 kV / 500 A
	C2 - 10 kV / 5 kA
	C3 - 100 A
	D1 - 500 A
Pulse reset time (line-line)	≤ 30 ms
Pulse reset time (line-earth)	≤ 30 ms
Pulse reset time (line-signalground)	≤ 30 ms

Additional technical data

Max. total discharge current $I_{total\ max}$ (8/20) µs	20 kA (1x - non Ex)

Environmental and real-life conditions

Ambient conditions

Degree of protection	IP20
Ambient temperature (operation)	-40 °C ... 85 °C
Ambient temperature (storage/transport)	-40 °C ... 85 °C
Altitude	≤ 4000 m (amsl)
Permissible humidity (operation)	5 % ... 95 %

Standards and regulations

Standards/specifications	IEC 61643-21
Note	2000 + corrigendum 2001 + A1:2008, modified + A2:2012

EN 61643-21

Standards/specifications	EN 61643-21
Note	2001 + A1:2009 + A2:2013
Standards/specifications	IEC 60079-0
Note	2017
Standards/specifications	IEC 60079-7
Note	2017
Standards/specifications	EN IEC 60079-0
Note	2018
Standards/specifications	EN IEC 60079-7
Note	2015 + A1:2018

Mounting

Mounting type	DIN rail: TH 35 - 7.5 mm

Drawings

Diagram

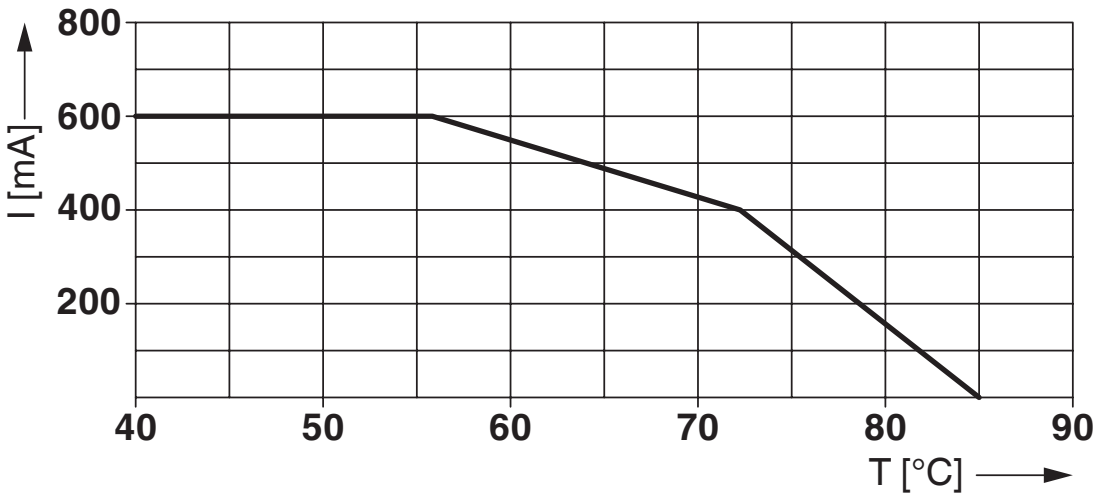

Schematic diagram

TTC-6P-3-HF-F-M-...-I									
Category	1oo1 architecture, HFT=0				1oo2 architecture, HFT=1				
	PFD_{AVG}	PFH	Used budget of SIL 2 SIF		PFD_{AVG}	PFH	CCF	Used budget of SIL 3 SIF	
			PFD_{AVG}	PFH				PFD_{AVG}	PFH
	$3.32_{x10^{-5}}$	$5.90_{x10^{-9}}$ 1/h	0.3 %	0.6 %	$1.66_{x10^{-6}}$	$2.95_{x10^{-10}}$ 1/h	5 %	0.2 %	0.3 %
					$3.32_{x10^{-6}}$	$5.90_{x10^{-10}}$ 1/h	10 %	0.3 %	0.6 %
	Calculation based on exida report, Phoenix Contact 16/06-072 R022 V4R2 exida Profile 1, FMEDA Analysis 2, T_{proof}: 1 year, MT: 10 years, MTTR: 24 hours, PTC: 99% Used standards IEC/EN 61508, edition 2010 (device specific) IEC/EN 61511, edition 2016 + COR1:2016 + A1:2017 (system specific)								

Functional safety scenarios

Dimensional drawing

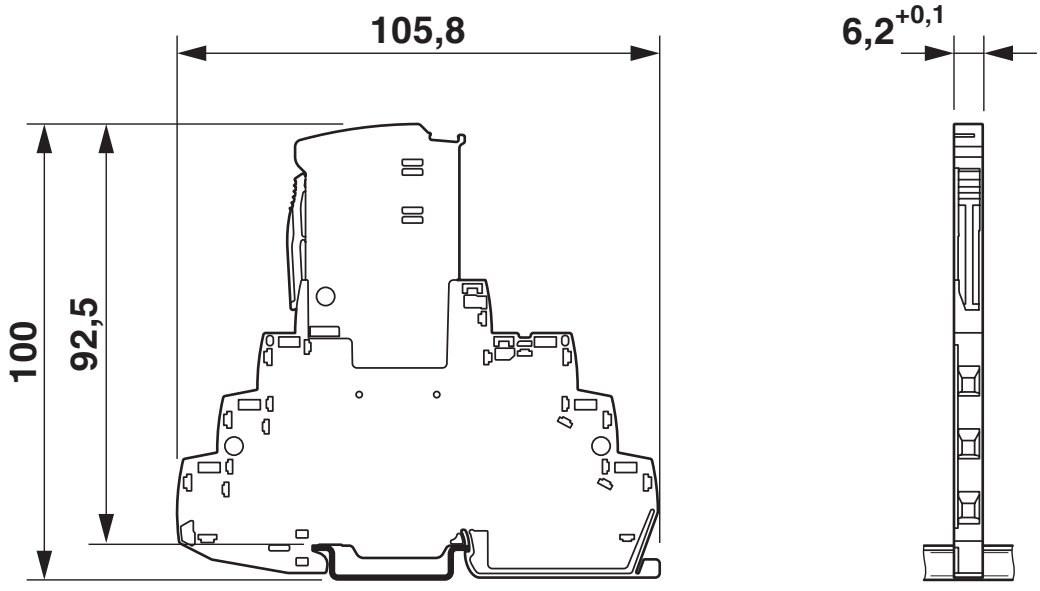

Circuit diagram

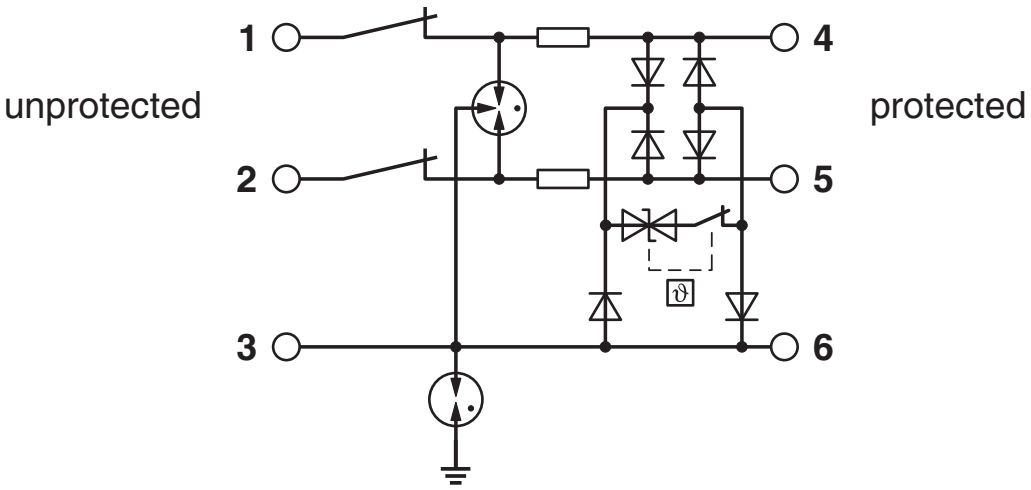

Diagram

Derating for Ex-areas (Zone 2, EX ec)

ϑ [°C]	I [mA]
≤ 30°C	600 mA
> 30°C ... ≤ 50°C	500 mA
> 50°C ... ≤ 70°C	400 mA

Approvals

To download certificates, visit the product detail page: https://www.phoenixcontact.com/us/products/2906786

CSA
Approval ID: 70136717

DNV GL
Approval ID: TAE000027G

UL Listed
Approval ID: FILE E 138168

CSAus
Approval ID: 70136717

UAE-RoHS
Approval ID: 22-06-16783

IECEx
Approval ID: IECEx BVS 21.0057X

ATEX
Approval ID: BVS 21 ATEX E 052 X

CCC
Approval ID: 2022122304116080

UKCA-EX
Approval ID: DEKRA 23UKEX7003X

cCSAus

Classifications

ECLASS

ECLASS-11.0	27130807
ECLASS-13.0	27171503

ETIM

ETIM 9.0	EC001466

UNSPSC

UNSPSC 21.0	39121600

Environmental product compliance

EU RoHS

Fulfills EU RoHS substance requirements	Yes
Exemption	7(a), 7(c)-I

China RoHS

Environment friendly use period (EFUP)	EFUP-50
	An article-related China RoHS declaration table can be found in the download area for the respective article under "Manufacturer declaration". For all articles with EFUP-E, no China RoHS declaration table issued and required.

EU REACH SVHC

REACH candidate substance (CAS No.)	Lead(CAS: 7439-92-1)
SCIP	cd8d7a0d-4707-4c67-929e-531148a7848b

Accessories

X-PEN 0,35 - Marker pen

0811228

https://www.phoenixcontact.com/us/products/0811228



Marker pen without ink cartridge, for manual labeling of markers, labeling extremely wipe-proof, line thickness 0.35 mm

ZBF 6 CUS - Zack Marker strip, flat

0825027

https://www.phoenixcontact.com/us/products/0825027



Zack Marker strip, flat, Strip, can be ordered: Strip, white, labeled according to customer specifications, mounting type: snap into flat marker groove, for terminal block width: 6.2 mm, lettering field size: 5.15 x 6.15 mm, Number of individual labels: 10

ZBF 6:UNBEDRUCKT - Zack Marker strip, flat

0808710

https://www.phoenixcontact.com/us/products/0808710



Zack Marker strip, flat, Strip, white, unlabeled, can be labeled with: PLOTMARK, CMS-P1-PLOTTER, mounting type: snapped, for terminal block width: 6.2 mm, lettering field size: 5.15 x 6.15 mm, Number of individual labels: 10

ZBF 6/WH-100:UNBEDRUCKT - Zack Marker strip, flat

0808736

https://www.phoenixcontact.com/us/products/0808736



Zack Marker strip, flat, Strip, white, unlabeled, can be labeled with: PLOTMARK, CMS-P1-PLOTTER, mounting type: snapped, for terminal block width: 6.2 mm, lettering field size: 5.15 x 6.15 mm, Number of individual labels: 1000

ZBF 6,QR:FORTL.ZAHLEN - Zack Marker strip, flat

0808765

https://www.phoenixcontact.com/us/products/0808765



Zack Marker strip, flat, Strip, white, labeled, Printed vertically: consecutive numbers 1 ... 10, 11 ... 20, etc. up to 91 ... 100, mounting type: snapped, for terminal block width: 6.2 mm, lettering field size: 5.15 x 6.15 mm, Number of individual labels: 10

CLIPFIX 35-5 - End bracket

3022276

https://www.phoenixcontact.com/us/products/3022276



Quick mounting end clamp for NS 35/7,5 DIN rail or NS 35/15 DIN rail, with marking option, with parking option for FBS...5, FBS...6, KSS 5, KSS 6, width: 5. 15 mm, color: gray

TTC-6-FMRS-UT - Remote signaling set

2907810

https://www.phoenixcontact.com/us/products/2907810



Module set for the optical monitoring and floating remote signaling of adjacent surge protective devices in the TERMITRAB complete or CLIXTRAB product family. Suitable for directly grounded DIN rails.

TTC-6-FC-UT - Fuse holder

1054762

https://www.phoenixcontact.com/us/products/1054762



Fuse carrier for surge protective devices of the TERMITRAB complete product range with screw connection technology. Multi-level connection on TTC-6 housings possible. For conventional 5x20 mm miniature fuses.

SSA 3-6 - Shield connection

2839295

https://www.phoenixcontact.com/us/products/2839295



Shield fast connection for 3 ... 6 mm cable diameter. Potential connecting cable: 200 mm, 1 mm^2, color: black

SSA 5-10 - Shield connection

2839512

https://www.phoenixcontact.com/us/products/2839512



Shield fast connection for 5 ... 10 mm cable diameter. Potential connecting cable: 200 mm, 1 mm^2, color: black

TTC-6P-3-HF-F-M-12DC-UT-I - Surge protection device

2906786

https://www.phoenixcontact.com/us/products/2906786

SZS 0,6X3,5 VDE - Screwdriver

1212602

https://www.phoenixcontact.com/us/products/1212602



Screwdriver, slot-headed, VDE insulated, size: 0.6 x 3.5 x 100 mm, 2-component grip, with non-slip grip

TTC-6P-3-HF-12DC-I-P - Surge protection plug

2907846

https://www.phoenixcontact.com/us/products/2907846



Surge protection plug with integrated status indicator on the module for three signal wires. For HF applications. Nominal voltage: 12 V DC

Phoenix Contact 2024 © - all rights reserved
https://www.phoenixcontact.com

Phoenix Contact USA
586 Fulling Mill Road
Middletown, PA 17057, United States
(+717) 944-1300
info@phoenixcon.com