SAC-5P-M12MS/15,0-542/M12FS BK - Sensor/actuator cable

1417904

https://www.phoenixcontact.com/us/products/1417904

Please be informed that the data shown in this PDF document is generated from our online catalog. Please find the complete data in the user documentation. Our general terms of use for downloads are valid.

Sensor/actuator cable, 5-position, PVC, yellow, Plug straight M12, coding: A, on Socket straight M12, coding: A, cable length: 15 m

Commercial data

Item number	1417904
Packing unit	1 pc
Minimum order quantity	1 pc
Note	Made to order (non-returnable)
Sales key	BF13
Product key	BF1ICC
GTIN	4055626211244
Weight per piece (including packing)	660.6 g
Weight per piece (excluding packing)	660.6 g
Customs tariff number	85444290
Country of origin	US

Technical data

Product properties

Product type	Sensor/actuator cable
Application	Standard, U.S. cables
Number of positions	5
No. of cable outlets	1
Shielded	no
Coding	A

Insulation characteristics

Overvoltage category	II
Degree of pollution	3

Material specifications

Flammability rating according to UL 94	HB
Seal material	NBR
Material of grip body	TPU, hardly inflammable, self-extinguishing
Contact material	CuSn
Contact surface material	Ni/Au
Contact carrier material	TPU GF
Material for screw connection	Zinc die-cast, nickel-plated
Outer sheath, material	PVC

Electrical properties

Insulation resistance	≥ 100 MΩ
Nominal voltage U_N	48 V AC
	60 V DC
Nominal current I_N	4 A

Mechanical properties

Mechanical data

Insertion/withdrawal cycles	≥ 100

Signaling

Status display	No
Status display present	No

Connection data

Conductor connection

Tightening torque	0.4 Nm (M12 connector)

Connector

Connection 1

Type	Plug straight M12
Number of positions	5
Coding type	A

Connection 2

Type	Socket straight M12
Number of positions	5
Coding type	A

Cable/line

Cable length	15 m

PVC yellow 105 °C [542]

Dimensional drawing	
Cable weight	43 kg/km
UL AWM Style	2517 (105 °C / 300 V)
Number of positions	5
Shielded	no
Cable type	PVC yellow 105 °C [542]
Conductor structure signal line	30x 1.30 mm
AWG signal line	22
Wire diameter incl. insulation	1.27 mm ±0.03 mm
External cable diameter	5.40 mm ±0.2 mm
Outer sheath, material	PVC
External sheath, color	yellow
Conductor material	Tin-plated Cu litz wires
Material, filler	PP
Material wire insulation	PVC
Single wire, color	brown, blue, black, white, gray
Overall twist	5 wires around filler to the core
Max. conductor resistance	max. 50.5 Ω/km (20 °C)
Insulation resistance	≥ (550 M Ohms/m @ 500V)
Nominal voltage, cable	300 V
Minimum bending radius, flexible installation	8 x D
Smallest bending radius, movable installation	44 mm
Flame resistance	FT4

Other resistance	UV resistant
Special properties	UL standards PLTC and ITC
Ambient temperature (operation)	-30 °C ... 105 °C (cable, fixed installation)
	-5 °C ... 105 °C (Cable, flexible installation)

Environmental and real-life conditions

Ambient conditions

Degree of protection	IP65
	IP67
	IP68
Ambient temperature (operation)	-25 °C ... 90 °C (Plug / socket)

Standards and regulations

Standard designation	M12 connector
Standards/specifications	IEC 61076-2-101

Drawings

Circuit diagram

Dimensional drawing

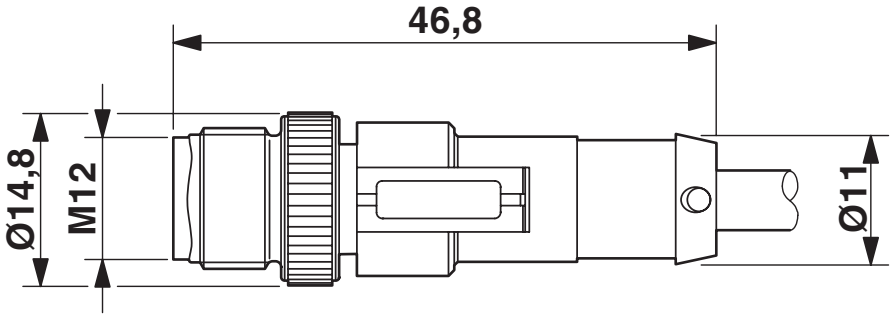

Plug, M12 x 1, straight

Schematic diagram

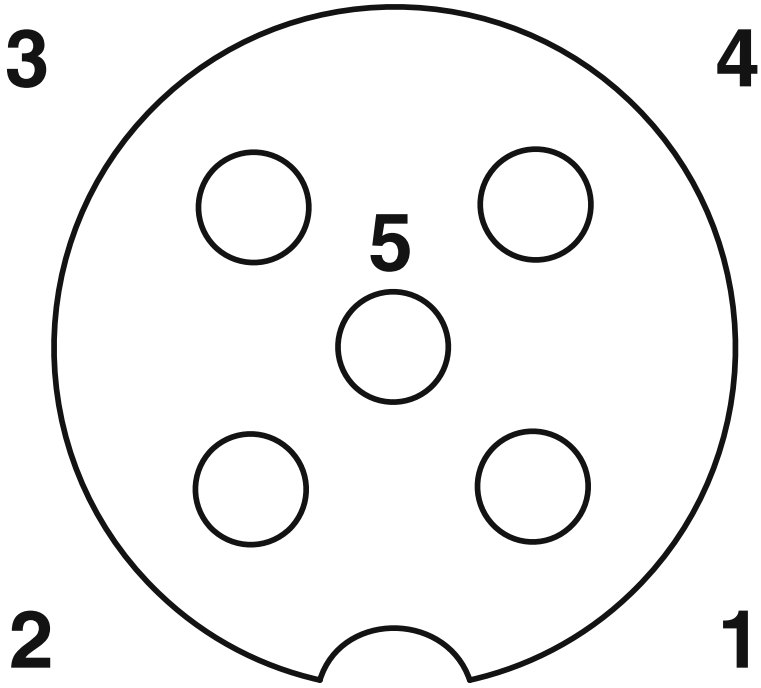

Pin assignment M12 socket, 5-pos., A-coded, female side

Dimensional drawing

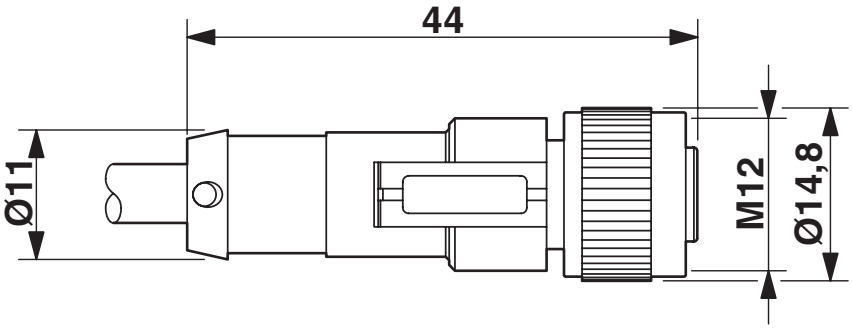

M12 x 1 socket, straight

Schematic diagram

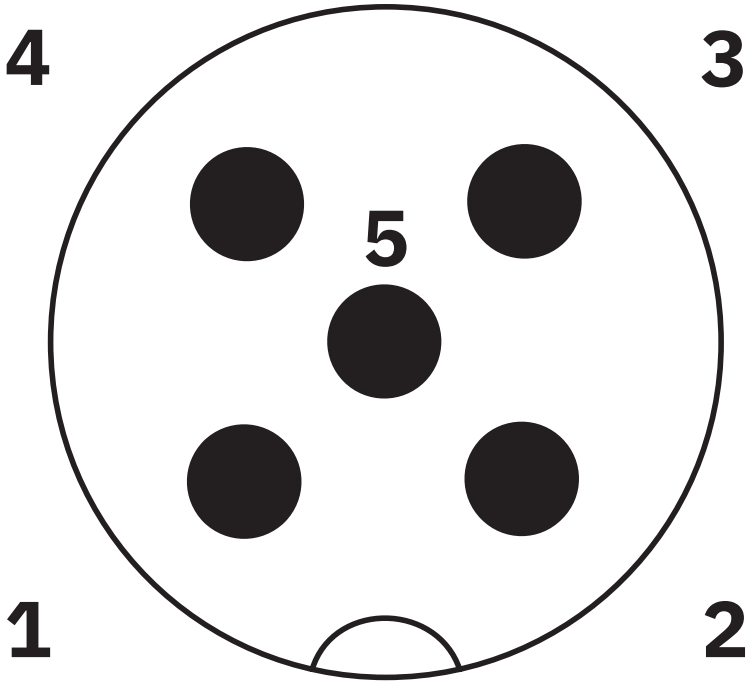

Pin assignment M12 male connector, 5-pos., A-coded, male side

Approvals

To download certificates, visit the product detail page: https://www.phoenixcontact.com/us/products/1417904

UL Listed
Approval ID: FILE E 221474

	Nominal voltage U_N	Nominal current I_N	Cross section AWG	Cross section mm^2
	125 V	4 A	-	-

cUL Listed
Approval ID: FILE E 221474

	Nominal voltage U_N	Nominal current I_N	Cross section AWG	Cross section mm^2
	125 V	4 A	-	-

cULus Listed

Classifications

ECLASS

ECLASS-11.0	27060311
ECLASS-12.0	27060311
ECLASS-13.0	27060311

ETIM

ETIM 8.0	EC001855

UNSPSC

UNSPSC 21.0	26121600

Environmental product compliance

EU RoHS

Fulfills EU RoHS substance requirements	Yes, No exemptions

China RoHS

Environment friendly use period (EFUP)	EFUP-E
	No hazardous substances above the limits

EU REACH SVHC

REACH candidate substance (CAS No.)	No substance above 0.1 wt%

Accessories

PROT-M12 FS-PA-CHAIN - Sealing cap

1430873

https://www.phoenixcontact.com/us/products/1430873

M12 sealing cap made of plastic with fixing band, for sensor cables, for free M12 plugs

SAC-M12-EXCLIP-M - Locking clip

1558988

https://www.phoenixcontact.com/us/products/1558988

Locking clip for the pin side of sensor/actuator cables with M12 connector and M12 connectors for assembly, for knurl diameter: 15 mm or for Allen key with a wrench size of 14 mm, prevents the disconnection of plug-in connections without tools

PROT-M12 MS-PA-CHAIN - Screw plug

1430899

https://www.phoenixcontact.com/us/products/1430899

M12 sealing cap with fixing band, for sensor cables, for free M12 sockets

SAC-M12-EXCLIP-F - Locking clip

1558991

https://www.phoenixcontact.com/us/products/1558991

Locking clip for the socket side of sensor/actuator cables with M12 connector and M12 connectors for assembly, for knurl diameter: 15 mm or for Allen key with a wrench size of 14 mm, prevents the disconnection of plug-in connections without tools

TSD 04 SAC - Torque screwdriver

1208429

https://www.phoenixcontact.com/us/products/1208429

Torque screwdriver, with preset torque of 0.4 Nm and 4 mm hexagonal drive for M12 connectors

TSD-M 1,2NM - Torque screwdriver

1212224

https://www.phoenixcontact.com/us/products/1212224

Torque screw driver, accuracy as per EN ISO 6789 standard, adjustable from 0.3 - 1.2 Nm

TSD-M SAC-BIT ADAPTER - Adapter insert

1212600

https://www.phoenixcontact.com/us/products/1212600

Adapter bit for TSD-M...torque tools, E6.3-1/4" drive with 4 mm hexagon to accommodate SAC bits

SAC BIT M12-D15 - Tool

1208432

https://www.phoenixcontact.com/us/products/1208432

Nut for assembling sensor/actuator cables with M12 connector and M12 connectors for assembly, with a knurl diameter of 15 mm, for 4 mm hexagonal drive

Phoenix Contact 2024 © - all rights reserved
https://www.phoenixcontact.com

Phoenix Contact USA
586 Fulling Mill Road
Middletown, PA 17057, United States
(+717) 944-1300
info@phoenixcon.com