SACC-E-M12FS-5PL-M20 - Panel feed-through

1139805

https://www.phoenixcontact.com/us/products/1139805

Please be informed that the data shown in this PDF document is generated from our online catalog. Please find the complete data in the user documentation. Our general terms of use for downloads are valid.



Panel feed-through, Universal, 5-position, unshielded, Socket straight M12, coding: A, Front mounting, M20 x 1,5, Push-lock spring connection, knurl material: Brass, nickel-plated, Flat nut included

Your advantages

- Easy and tool-free connection with Push-Lock connection
- Easy assignment of individual conductors with color coding and numerical marking of contact holder levers
- Conveniently connect stranded conductors, thanks to lever
- Reliable and quick connection of electric cables

Commercial data

Item number	1139805
Packing unit	1 pc
Minimum order quantity	1 pc
Sales key	BF33
Product key	BF2CEA
GTIN	4063151222444
Weight per piece (including packing)	31 g
Weight per piece (excluding packing)	22.22 g
Customs tariff number	85366990
Country of origin	DE

Technical data

Notes

Assembly note	NOTE: Observe the permissible bending radii when laying conductors, since the degree of protection may be put in jeopardy if the bending forces are too high. Alleviate mechanical loads upstream of the connector, e.g. by using cable ties.
Notes on operation	The electrical and mechanical data specified assume that the connector pair is correctly locked and mounted. If the connector is unlocked and if there is a danger of contamination, the connector must be sealed using a protective cap > IP54. Influences arising from litz wires, cables or PCB assembly must also be taken into consideration.

Mounting

Mounting type	Front mounting M20 x 1,5
Assembly note	The wires can be connected both with ferrules and without ferrules

Product properties

Product type	Circular connectors (device side)
Sensor type	Universal
Number of positions	5
No. of cable outlets	1
Shielded	no
Coding	A
Cable outlet	straight

Insulation characteristics

Overvoltage category	II
Degree of pollution	3

Dimensions

Dimensional drawing	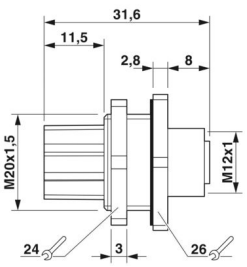
Length	19.2 mm
Hole diameter	20.4 mm +0.1 mm

Housing

Diameter housing	29 mm

Material specifications

Material	PA 6
Flammability rating according to UL 94	V0
Seal material	NBR
Contact material	CuSn
Contact surface material	Ni/Au
Contact carrier material	PA 6.6
Material for screw connection	Brass, nickel-plated

Electrical properties

Rated surge voltage	1.5 kV
Contact resistance	≤ 5 mΩ
Insulation resistance	≥ 100 MΩ
Nominal voltage U_N	48 V AC
	60 V DC
Nominal current I_N	4 A (2 A when using 0.14 mm² conductors)

Connection data

Conductor connection

Connection method	Push-lock spring connection
Contact connection type	Socket
Tightening torque	0.4 Nm (M12 plug)
	2 Nm (Installation-side)

Mechanical properties

Mechanical data

Insertion/withdrawal cycles	≥ 100

Connector

Connection 1

Head design	Socket
Head cable outlet	straight
Head thread type	M12
Coding	A

Cable/line

Signal type/category	Universal
Stripping length of the individual wire	7 mm

Environmental and real-life conditions

Ambient conditions

Degree of protection	IP67

Ambient temperature (operation)	-40 °C ... 85 °C (Plug / socket)

Standards and regulations

M12

Standard designation	M12 connector
Standards/specifications	IEC 61076-2-101

Drawings

Dimensional drawing

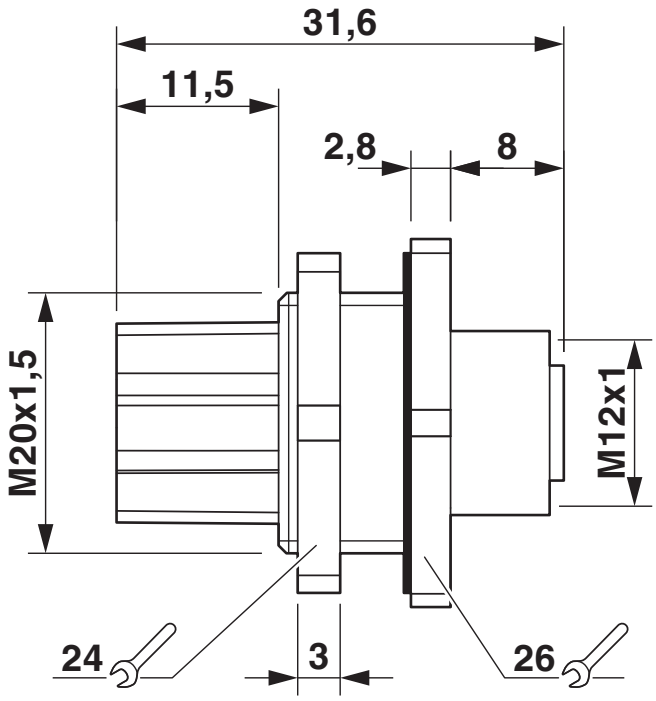

M12 flush-type socket

Schematic diagram

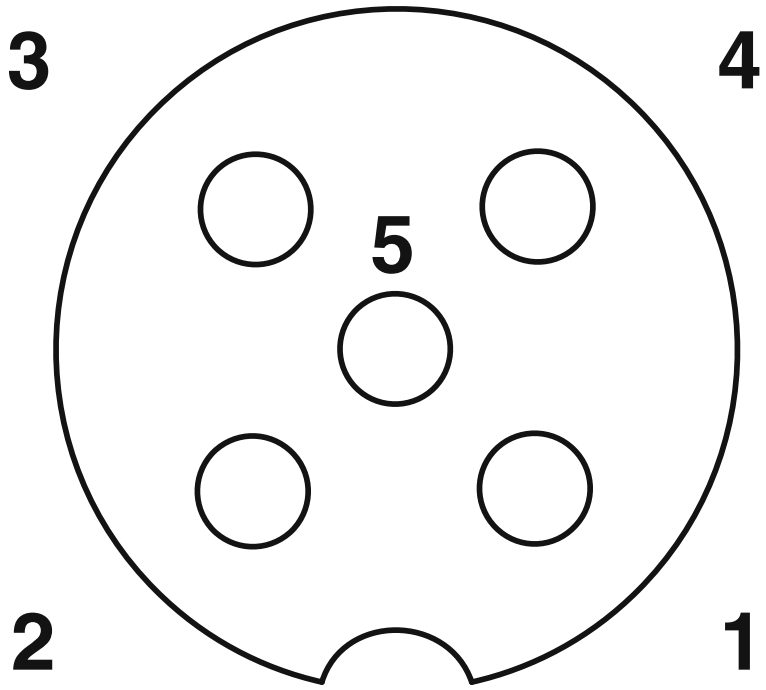

Pin assignment M12 socket, 5-pos., A-coded, socket side view

Drilling plan/solder pad geometry

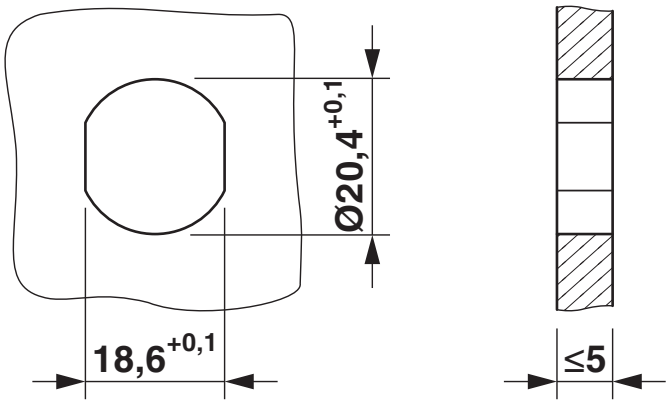

Housing cutout for M20 fastening thread, mounting panel with thread

Functional drawing

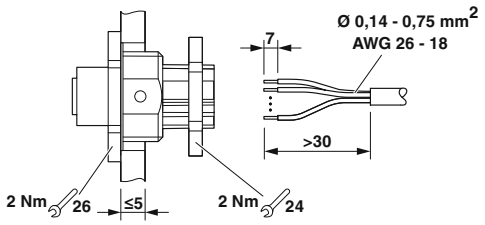

Approvals

To download certificates, visit the product detail page: https://www.phoenixcontact.com/us/products/1139805

UL Listed
Approval ID: E221474

cUL Listed
Approval ID: E221474

cULus Listed

Classifications

ECLASS

ECLASS-11.0	27440109
ECLASS-12.0	27440109
ECLASS-13.0	27440109

ETIM

ETIM 9.0	EC003569

UNSPSC

UNSPSC 21.0	39121400

Environmental product compliance

EU RoHS

Fulfills EU RoHS substance requirements	Yes, No exemptions

China RoHS

Environment friendly use period (EFUP)	EFUP-E
	No hazardous substances above the limits

EU REACH SVHC

REACH candidate substance (CAS No.)	No substance above 0.1 wt%

Accessories

SACC-M12MS-5PL M - Connector

1424649

https://www.phoenixcontact.com/us/products/1424649



Connector, Universal, 5-position, unshielded, Plug straight M12, coding: A, Push-lock spring connection, knurl material: Zinc die-cast, nickel-plated, external cable diameter 4 mm ... 8 mm

SACC-M12MR-5PL M - Connector

1424651

https://www.phoenixcontact.com/us/products/1424651



Connector, Universal, 5-position, unshielded, Plug angled M12, coding: A, Push-lock spring connection, knurl material: Zinc die-cast, nickel-plated, external cable diameter 4 mm ... 8 mm

PROT-M12 - Screw plug

1680539

https://www.phoenixcontact.com/us/products/1680539



An M12 screw plug for the unoccupied M12 sockets of the sensor/actuator cable, boxes and flush-type connectors

PROT-M12 SH - Screw plug

1503302

https://www.phoenixcontact.com/us/products/1503302



An M12 screw plug for the unoccupied M12 sockets of the shielded sensor/actuator cable, boxes and flush-type connectors

SAC-5P-100,0-PUR/0,34 - Cable reel

1501676

https://www.phoenixcontact.com/us/products/1501676



By the meter, Cable reel, PUR halogen-free, black-gray RAL 7021, 5-wire, color single wire: brown, white, blue, black, green-yellow, cable length: 100 m

AI 0,25- 6 YE - Ferrule

3203024

https://www.phoenixcontact.com/us/products/3203024



Ferrule, sleeve length: 6 mm, color: yellow

A 0,25- 7 - Ferrule

3202478

https://www.phoenixcontact.com/us/products/3202478



Ferrule, color: silver

A 0,34- 7 - Ferrule

3009202

https://www.phoenixcontact.com/us/products/3009202



Ferrule, color: silver

A 0,5 - 6 - Ferrule

3200218

https://www.phoenixcontact.com/us/products/3200218



Ferrule, color: silver

AI 0,5 - 6 WH - Ferrule

3200687

https://www.phoenixcontact.com/us/products/3200687



Ferrule, sleeve length: 6 mm, color: white

WIREFOX 2,5 - Stripping tool

1212368

https://www.phoenixcontact.com/us/products/1212368



Stripping tool, for conductors and cables with a conductor cross section from 0. 08 to 2.5 mm, self-adjusting, stripping length adjustable up to 15 mm, cutting capacity up to 6 mm^2 stranded/1.5 mm^2 solid

WIREFOX SAC - Stripping tool

1212623

https://www.phoenixcontact.com/us/products/1212623



Stripping pliers, for halogen-free sensor/actuator cables (SAC cables), with PUR and PVC insulation, from Ø of 4.4 to 7 mm, any stripping length

SACC-E-M12FS-5PL-M20 - Panel feed-through

1139805

https://www.phoenixcontact.com/us/products/1139805

CRIMPFOX 6H - Crimping pliers

1212046

https://www.phoenixcontact.com/us/products/1212046



Crimping pliers, for ferrules without insulating collar according to DIN 46228 Part 1 and ferrules with insulating collar according to DIN 46228 Part 4, 0.14 mm^2 ... 6 mm^2, unlockable pressure lock, lateral entry

Phoenix Contact 2024 © - all rights reserved
https://www.phoenixcontact.com

Phoenix Contact USA
586 Fulling Mill Road
Middletown, PA 17057, United States
(+717) 944-1300
info@phoenixcon.com