SAC-8P- 2,0-542/ FR SCO BK - Sensor/actuator cable

1406108

https://www.phoenixcontact.com/us/products/1406108

Please be informed that the data shown in this PDF document is generated from our online catalog. Please find the complete data in the user documentation. Our general terms of use for downloads are valid.



Sensor/actuator cable, 8-position, PVC, yellow, free cable end, on Socket angled M12, coding: A, cable length: 2 m

Commercial data

Item number	1406108
Packing unit	1 pc
Minimum order quantity	1 pc
Sales key	BF13
Product key	BF1ICD
GTIN	4046356799416
Weight per piece (including packing)	105.24 g
Weight per piece (excluding packing)	105.24 g
Customs tariff number	85444290
Country of origin	US

Technical data

Product properties

Product type	Sensor/actuator cable
Application	Standard, U.S. cables
Number of positions	8
No. of cable outlets	1
Shielded	no
Coding	A

Insulation characteristics

Overvoltage category	II
Degree of pollution	3

Material specifications

Flammability rating according to UL 94	HB
Seal material	NBR
Material of grip body	TPU, hardly inflammable, self-extinguishing
Contact material	CuZn
Contact surface material	Ni/Au
Contact carrier material	TPU GF
Material for screw connection	Zinc die-cast, nickel-plated
Outer sheath, material	PVC

Electrical properties

Insulation resistance	≥ 100 MΩ
Nominal voltage U_N	30 V AC
	30 V DC
Nominal current I_N	2 A

Mechanical properties

Mechanical data

Insertion/withdrawal cycles	≥ 100

Signaling

Status display	No
Status display present	No

Connection data

Conductor connection

Tightening torque	0.4 Nm (M12 connector)

Connector

Connection 1

Type	free cable end

Connection 2

Type	Socket angled M12
Number of positions	8
Coding type	A

Cable/line

Cable length	2 m

PVC yellow 105 °C [542]

Dimensional drawing	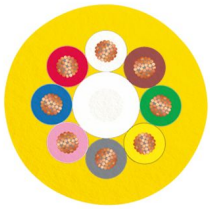
Cable weight	44 kg/km
UL AWM Style	2517 (105 °C / 300 V)
Number of positions	8
Shielded	no
Cable type	PVC yellow 105 °C [542]
Conductor structure signal line	32x 1.10 mm
AWG signal line	24
Wire diameter incl. insulation	1.12 mm ±0.03 mm
External cable diameter	5.70 mm ±0.2 mm
Outer sheath, material	PVC
External sheath, color	yellow
Conductor material	Tin-plated Cu litz wires
Material, filler	PP
Material wire insulation	PVC
Single wire, color	white, brown, green, yellow, gray, pink, blue, red
Overall twist	8 wires around filler to the core
Max. conductor resistance	max. 79.7 Ω/km (20 °C)
Insulation resistance	≥ (550 M Ohms/m @ 500V)
Nominal voltage, cable	300 V
Minimum bending radius, flexible installation	8 x D
Smallest bending radius, movable installation	46 mm
Flame resistance	FT1, VW-1
Other resistance	UV resistant
Ambient temperature (operation)	-30 °C ... 105 °C (cable, fixed installation)

	-5 °C ... 105 °C (Cable, flexible installation)

Environmental and real-life conditions

Ambient conditions

Degree of protection	IP65
	IP67
	IP68
Ambient temperature (operation)	-25 °C ... 90 °C (Plug / socket)
	-40 °C ... 80 °C (cable, fixed installation)
	-5 °C ... 80 °C (Cable, flexible installation)

Standards and regulations

Standard designation	M12 connector
Standards/specifications	IEC 61076-2-101

Drawings

Schematic diagram

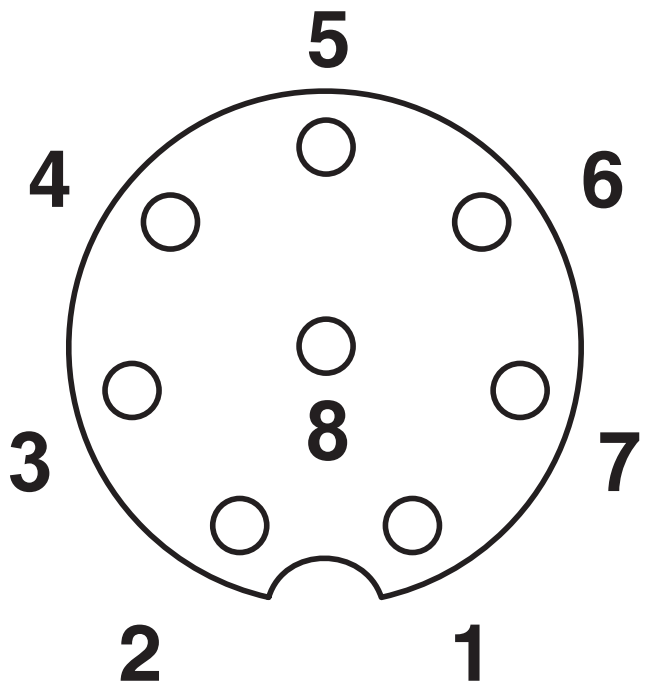

Pin assignment M12 socket, 8-pos., A-coded, view female side

Dimensional drawing

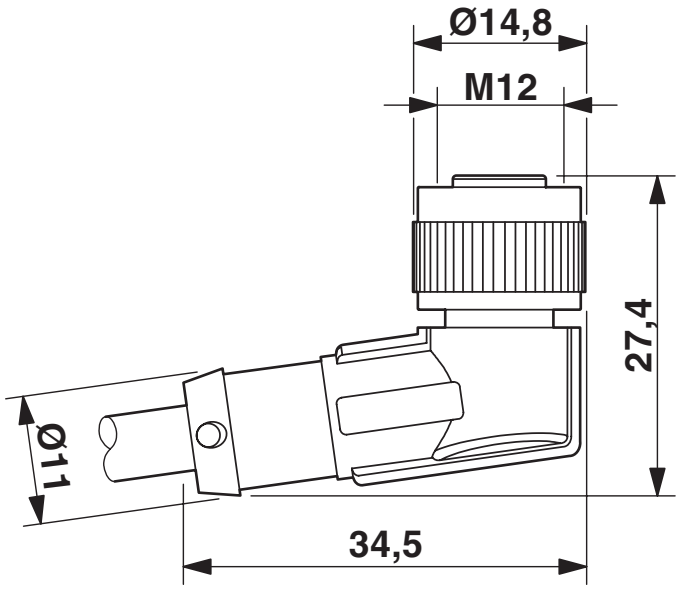

M12 x 1 socket, angled

Circuit diagram

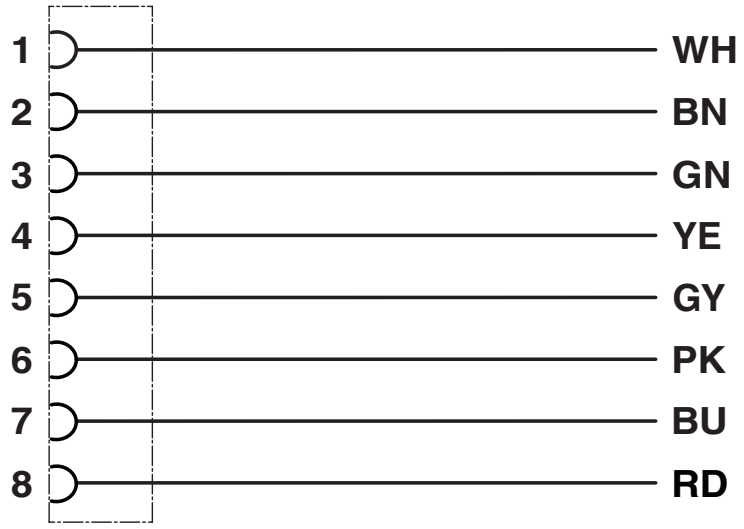

Approvals

To download certificates, visit the product detail page: https://www.phoenixcontact.com/us/products/1406108

UL Listed
Approval ID: FILE E 221474

	Nominal voltage U_N	Nominal current I_N	Cross section AWG	Cross section mm^2
	30 V	2 A	-	-

cUL Listed
Approval ID: FILE E 221474

	Nominal voltage U_N	Nominal current I_N	Cross section AWG	Cross section mm^2
	30 V	2 A	-	-

EAC-RoHS
Approval ID: RU D-DE.HB35.B.00387

cULus Listed

Classifications

ECLASS

ECLASS-11.0	27060311
ECLASS-12.0	27060311
ECLASS-13.0	27060311

ETIM

ETIM 9.0	EC001855

UNSPSC

UNSPSC 21.0	26121600

Environmental product compliance

EU RoHS

Fulfills EU RoHS substance requirements	Yes, No exemptions

China RoHS

Environment friendly use period (EFUP)	EFUP-50
	An article-related China RoHS declaration table can be found in the download area for the respective article under "Manufacturer declaration". For all articles with EFUP-E, no China RoHS declaration table issued and required.

EU REACH SVHC

REACH candidate substance (CAS No.)	No substance above 0.1 wt%

Accessories

UCT-WMT (23X4) - Conductor marker

0801453

https://www.phoenixcontact.com/us/products/0801453



Conductor marker, Sheet, white, unlabeled, can be labeled with: TOPMARK NEO, TOPMARK LASER, BLUEMARK ID COLOR, BLUEMARK ID, BLUEMARK CLED, THERMOMARK PRIME, THERMOMARK CARD 2.0, THERMOMARK CARD, mounting type: insert, cable diameter range: 1.5 ... 35 mm, lettering field size: 23 x 4 mm, Number of individual labels: 30

UC-WMT (23X4) - Conductor marker

0819411

https://www.phoenixcontact.com/us/products/0819411



Conductor marker, Sheet, white, unlabeled, can be labeled with: BLUEMARK ID COLOR, BLUEMARK ID, BLUEMARK CLED, PLOTMARK, CMS-P1-PLOTTER, mounting type: insert, cable diameter range: 1.5 ... 35 mm, lettering field size: 23 x 4 mm, Number of individual labels: 24

US-WMT (23X4) - Cable marker

0828769

https://www.phoenixcontact.com/us/products/0828769



Cable marker, Card, white, unlabeled, can be labeled with: BLUEMARK ID COLOR, BLUEMARK ID, THERMOMARK PRIME, THERMOMARK CARD 2.0, THERMOMARK CARD, mounting type: slide-on, cable diameter range: 1.5 ... 35 mm, lettering field size: 23 x 4 mm, Number of individual labels: 56

WMTW (23X4)R - Cable marker

0831004

https://www.phoenixcontact.com/us/products/0831004



Cable marker, Roll, white, unlabeled, can be labeled with: THERMOMARK E.300 (D)/600 (D), THERMOMARK ROLL 2.0, THERMOMARK ROLL, THERMOMARK ROLL X1, THERMOMARK ROLLMASTER 300/600, THERMOMARK X1.2, mounting type: insert, cable diameter range: 1.5 ... 35 mm, lettering field size: 23 x 4 mm, Number of individual labels: 3000

WP-CTA POM 13,0 BK - Protective hose adapter

1422884

https://www.phoenixcontact.com/us/products/1422884



Protective hose adapter, for corrugated hoses with a nominal size of 13 (10 x 13), corrugated in parallel

WP-PA HF 13,0 BK - Protective hose

3240681

https://www.phoenixcontact.com/us/products/3240681



Protective hose, material: PA 6, UV-resistant: yes, flexible, degree of protection: IP68, color: black, flammability rating in acc. with UL 94: V0, inner diameter: 10 mm, Total length: 50 m

WP-PA HF-HB 13,0 BK - Protective hose

3240839

https://www.phoenixcontact.com/us/products/3240839



Protective hose, material: PA 6, UV-resistant: yes, flexible, degree of protection: IP68, color: black, flammability rating in acc. with UL 94: HB, inner diameter: 10 mm, Total length: 50 m

PROT-M12 MS-PA-CHAIN - Screw plug

1430899

https://www.phoenixcontact.com/us/products/1430899

M12 sealing cap with fixing band, for sensor cables, for free M12 sockets



SAC-M12-EXCLIP-F - Locking clip

1558991

https://www.phoenixcontact.com/us/products/1558991



Locking clip for the socket side of sensor/actuator cables with M12 connector and M12 connectors for assembly, for knurl diameter: 15 mm or for Allen key with a wrench size of 14 mm, prevents the disconnection of plug-in connections without tools

B-STIFT - Marker pen

1051993

https://www.phoenixcontact.com/us/products/1051993



Marker pen, for manual labeling of unprinted Zack strips, smear-proof and waterproof, line thickness 0.5 mm

CUTFOX-S VDE - Diagonal cutter

1212207

https://www.phoenixcontact.com/us/products/1212207



Diagonal cutter for hard (piano wire) and soft wires, VDE 1000 V AC/1500 V DC tested

WIREFOX SAC-1 - Stripping tool

1212757

https://www.phoenixcontact.com/us/products/1212757



Stripping pliers, for halogen-free sensor/actuator cables (SAC cables), with PUR and PVC insulation, from Ø of 3.2 to 4.4 mm, any stripping length

WIREFOX SAC - Stripping tool

1212623

https://www.phoenixcontact.com/us/products/1212623



Stripping pliers, for halogen-free sensor/actuator cables (SAC cables), with PUR and PVC insulation, from Ø of 4.4 to 7 mm, any stripping length

WIREFOX 10 - Stripping tool

1212150

https://www.phoenixcontact.com/us/products/1212150



Stripping tool, for cables and conductors from 0.02 - 10 mm^2, self-adjusting, stripping length of up to 18 mm, cutting capacity of up to 10 mm^2 stranded/1.5 mm^2 solid, replaceable stripping blade

TSD 04 SAC - Torque screwdriver

1208429

https://www.phoenixcontact.com/us/products/1208429



Torque screwdriver, with preset torque of 0.4 Nm and 4 mm hexagonal drive for M12 connectors

TSD-M 1,2NM - Torque screwdriver

1212224

https://www.phoenixcontact.com/us/products/1212224



Torque screw driver, accuracy as per EN ISO 6789 standard, adjustable from 0. 3 - 1.2 Nm

TSD-M SAC-BIT ADAPTER - Adapter insert

1212600

https://www.phoenixcontact.com/us/products/1212600



Adapter bit for TSD-M...torque tools, E6.3-1/4" drive with 4 mm hexagon to accommodate SAC bits

SAC BIT M12-D15 - Tool

1208432

https://www.phoenixcontact.com/us/products/1208432



Nut for assembling sensor/actuator cables with M12 connector and M12 connectors for assembly, with a knurl diameter of 15 mm, for 4 mm hexagonal drive

Phoenix Contact 2024 © - all rights reserved
https://www.phoenixcontact.com

Phoenix Contact USA
586 Fulling Mill Road
Middletown, PA 17057, United States
(+717) 944-1300
info@phoenixcon.com