CC1,5-TS-2,10FPE K/L AU - Crimp contact

1029401

https://www.phoenixcontact.com/us/products/1029401

Please be informed that the data shown in this PDF document is generated from our online catalog. Please find the complete data in the user documentation. Our general terms of use for downloads are valid.



Crimp contact, contact diameter: 1.5 mm, turned, Socket, contact material: CuZn, contact surface: Ni/Au, connection cross section: 1.5 mm^2 ... 1.5 mm^2, AWG 14, for the PE or functional ground connection

Commercial data

Item number	1029401
Packing unit	25 pc
Minimum order quantity	25 pc
Sales key	BF34
Product key	BF2CJB
Catalog page	Page 278 (C-2-2019)
GTIN	4055626531434
Weight per piece (including packing)	0.58 g
Weight per piece (excluding packing)	0.58 g
Customs tariff number	85366990
Country of origin	DE

Technical data

Mounting

Mounting type	Snap in

Product properties

Product type	Crimp contact
Type	Individual female contact
Contact material type	turned

Connection data

Connection method	Crimp connection
Contact connection type	Socket
Connection technology	Crimp connection
Conductor cross section	1.5 mm² ... 1.5 mm² (flexible)
Connection cross section AWG	14 (flexible)
Conductor cross section flexible	1.5 mm² ... 1.5 mm²
Conductor cross section AWG	14 ...

Material specifications

Contact material	CuZn
Contact surface material	Ni/Au

Dimensions

Mechanical characteristics

Contact diameter	1.5 mm

Mechanical properties

Mechanical data

Insertion/withdrawal cycles	≥ 100

Environmental and real-life conditions

Ambient conditions

Ambient temperature (operation)	-40 °C ... 85 °C

Drawings

Dimensional drawing

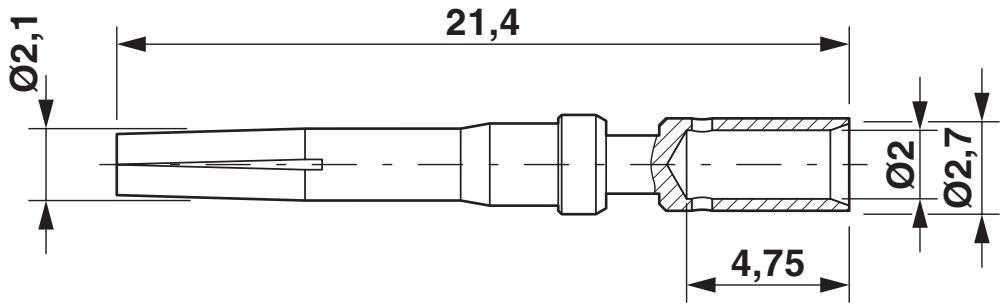

Crimp contact, diameter: 1.5 mm

Classifications

ECLASS

ECLASS-11.0	27440204
ECLASS-12.0	27440204
ECLASS-13.0	27440204

ETIM

ETIM 9.0	EC000796

UNSPSC

UNSPSC 21.0	39121500

Environmental product compliance

EU RoHS

Fulfills EU RoHS substance requirements	Yes, No exemptions

China RoHS

Environment friendly use period (EFUP)	EFUP-E
	No hazardous substances above the limits

EU REACH SVHC

REACH candidate substance (CAS No.)	No substance above 0.1 wt%

Mandatory accessories

CRIMPFOX-TC MP-6 - Crimping pliers with digital display

1202888

https://www.phoenixcontact.com/us/products/1202888



Crimping tool, for turned contacts, universal cross-section setting, up to a maximum of 6.0 mm^2, digital display with 0.01 mm increments, pressure lock can be unlocked, positioning tool necessary as an accessory for contact positioning

Accessories

SACC-M12MSK-4PECT-CL SH - Power connector

1027474

https://www.phoenixcontact.com/us/products/1027474



Power connector, Power, 5-position, shielded, Plug straight M12, coding: K, Crimp connection, knurl material: Zinc die-cast, tin-plated, external cable diameter 8 mm ... 13 mm, without crimp contacts

SACC-M12MSL-4FECT-CL SH - Power connector

1027477

https://www.phoenixcontact.com/us/products/1027477



Power connector, Power, 5-position, shielded, Plug straight M12, coding: L, Crimp connection, knurl material: Zinc die-cast, tin-plated, external cable diameter 8 mm ... 13 mm, without crimp contacts

CRIMPFOX-TC MP/LOC-1 - Spare locator

1142829

https://www.phoenixcontact.com/us/products/1142829



Locator for CRIMPFOX-TC MP6

WIREFOX 2,5 - Stripping tool

1212368

https://www.phoenixcontact.com/us/products/1212368



Stripping tool, for conductors and cables with a conductor cross section from 0. 08 to 2.5 mm, self-adjusting, stripping length adjustable up to 15 mm, cutting capacity up to 6 mm^2 stranded/1.5 mm^2 solid

Phoenix Contact 2024 © - all rights reserved
https://www.phoenixcontact.com

Phoenix Contact USA
586 Fulling Mill Road
Middletown, PA 17057, United States
(+717) 944-1300
info@phoenixcon.com