SACC-M12MS-4QO-0,75-VA - Connector

1440779

https://www.phoenixcontact.com/us/products/1440779

Please be informed that the data shown in this PDF document is generated from our online catalog. Please find the complete data in the user documentation. Our general terms of use for downloads are valid.



Connector, Universal, 4-position, Plug straight M12, coding: A, Insulation displacement connection, knurl material: Stainless steel 1.4404, external cable diameter 4 mm ... 8 mm

Your advantages

- Safe use in the field, thanks to a high degree of protection
- Insulation displacement connection: innovative and time-saving assembly without stripping the single wire

Commercial data

Item number	1440779
Packing unit	1 pc
Minimum order quantity	1 pc
Sales key	BF31
Product key	BF2CCA
Catalog page	Page 20 (C-2-2019)
GTIN	4046356517010
Weight per piece (including packing)	16 g
Weight per piece (excluding packing)	15.6 g
Customs tariff number	85366990
Country of origin	DE

Technical data

Notes

Assembly note	NOTE: Observe the permissible bending radii when laying conductors, since the degree of protection may be put in jeopardy if the bending forces are too high. Alleviate mechanical loads upstream of the connector, e.g. by using cable ties.

Mounting

Assembly note	AWG 18 wire cross section upon request

Product properties

Product type	Circular connector (cable-side)
Sensor type	Universal
Number of positions	4
No. of cable outlets	1
Shielded	no
Coding	A

Insulation characteristics

Overvoltage category	III
Degree of pollution	3

Dimensions

Dimensional drawing	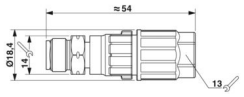
Length	54 mm
Wrench size, union nut	15 mm
Wrench size, counter nut	15 mm

External dimensions

Outside diameter	4 mm ... 8 mm

Housing

Diameter housing	18.4 mm

Material specifications

Flammability rating according to UL 94	V0
Seal material	Neoprene
Material of grip body	PA 6
Contact material	CuSn

Contact surface material	Ni/Au
Contact carrier material	TPU
Material for screw connection	Stainless steel 1.4404
Wire insulation material	PVC / PE / PP / rubber

Connection data

Conductor connection

Connection method	Insulation displacement connection
Connection cross section	0.34 mm² ... 0.75 mm²
Connection cross section AWG	22 ... 18
Tightening torque	0.4 Nm (M12 knurl)
	1.5 Nm (Pressure nut)

Pin assignment

Contact | Color (signal designation) | Contact (optional)	1 = BN
	2 = WH
	3 = BU
	4 = BK

Electrical properties

Rated surge voltage	4 kV
Contact resistance	≤ 5 mΩ
Insulation resistance	≥ 100 MΩ
Nominal voltage U_N	250 V AC
	250 V DC
Nominal current I_N	4 A

Mechanical properties

Mechanical data

Insertion/withdrawal cycles	≥ 100

Connector

Connection 1

Head design	Plug
Head cable outlet	straight
Head thread type	M12
Coding	A

Cable/line

Signal type/category	Universal
External cable diameter	4 mm ... 8 mm

Environmental and real-life conditions

Ambient conditions

Degree of protection	IP65
	IP67
Ambient temperature (operation)	-25 °C ... 80 °C (Plug / socket)
Ambient temperature (assembly)	-5 °C ... 50 °C (During assembly)

Standards and regulations

M12

Standard designation	M12 connector
Standards/specifications	according to IEC 61076-2-101

Drawings

Dimensional drawing

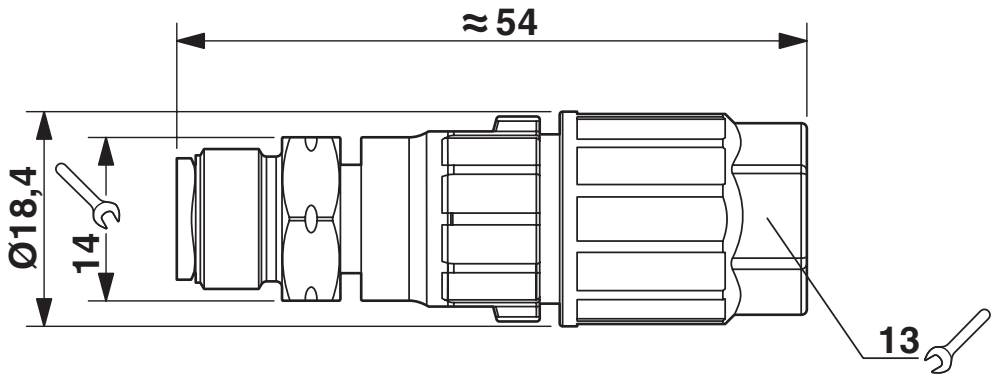

M12 plug, straight,
QUICKON connection: 0.34 mm^2 ... 0.75 mm^2

Schematic diagram

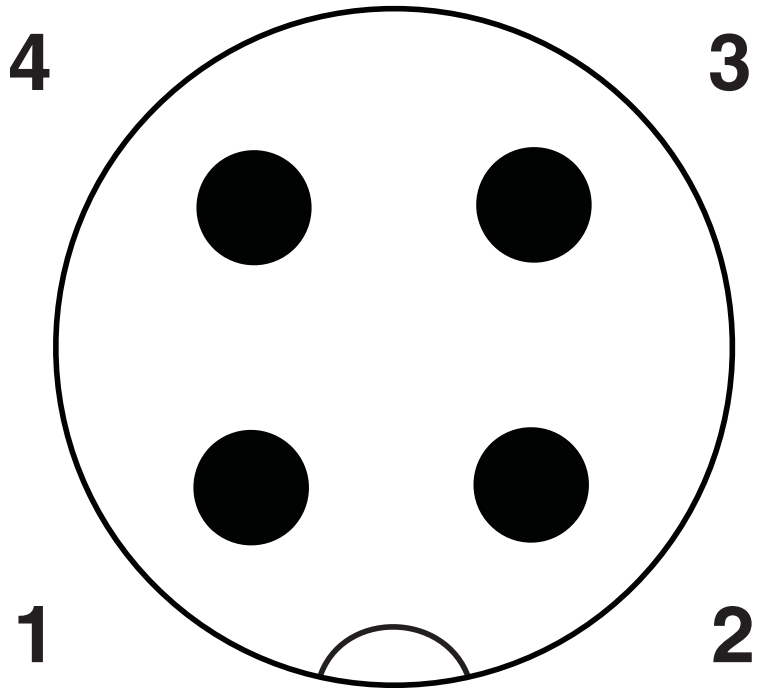

Pin assignment M12 plug, 4-pos., A-coded, view plug side

Functional drawing

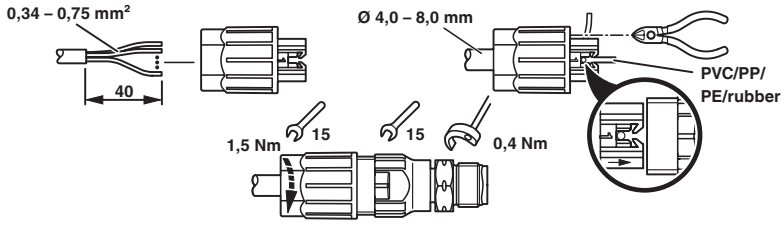

Approvals

To download certificates, visit the product detail page: https://www.phoenixcontact.com/us/products/1440779

DNV
Approval ID: TAE00002K4

EAC
Approval ID: RU C-DE.BL08.B.00511

Classifications

ECLASS

ECLASS-11.0	27440102
ECLASS-12.0	27440116
ECLASS-13.0	27440116

ETIM

ETIM 9.0	EC002635

UNSPSC

UNSPSC 21.0	39121400

Environmental product compliance

EU RoHS

Fulfills EU RoHS substance requirements	Yes, No exemptions

China RoHS

Environment friendly use period (EFUP)	EFUP-E
	No hazardous substances above the limits

EU REACH SVHC

REACH candidate substance (CAS No.)	No substance above 0.1 wt%

Accessories

PROT-M12 FS-PA-CHAIN - Sealing cap

1430873

https://www.phoenixcontact.com/us/products/1430873

M12 sealing cap made of plastic with fixing band, for sensor cables, for free M12 plugs



QSS 15 - Socket wrench

1641992

https://www.phoenixcontact.com/us/products/1641992

Allen wrench, for loosening and fastening the QUICKON union nut, WAF 15 mm



TSD 04 SAC - Torque screwdriver

1208429

https://www.phoenixcontact.com/us/products/1208429



Torque screwdriver, with preset torque of 0.4 Nm and 4 mm hexagonal drive for M12 connectors

SAC BIT M12-W14 - Tool

1212513

https://www.phoenixcontact.com/us/products/1212513



Nut for assembling sensor/actuator cables with M12 connector and M12 connectors for assembly, with a hexagonal knurl wrench size of 14 mm, with 4 mm hexagonal drive

TSD-M 1,2NM - Torque screwdriver

1212224

https://www.phoenixcontact.com/us/products/1212224



Torque screw driver, accuracy as per EN ISO 6789 standard, adjustable from 0. 3 - 1.2 Nm

TSD-M SAC-BIT ADAPTER - Adapter insert

1212600

https://www.phoenixcontact.com/us/products/1212600



Adapter bit for TSD-M...torque tools, E6.3-1/4" drive with 4 mm hexagon to accommodate SAC bits

Phoenix Contact 2024 © - all rights reserved
https://www.phoenixcontact.com

Phoenix Contact USA
586 Fulling Mill Road
Middletown, PA 17057, United States
(+717) 944-1300
info@phoenixcon.com