Fixed Current-Limiting Power-Distribution Switches

NCP382

The NCP382 is a single input dual outputs high side power−distribution switch designed for applications where heavy capacitive loads and short−circuits are likely to be encountered. The device includes an integrated 80 mΩ, P−channel MOSFET. The device limits the output current to a desired level by switching into a constant−current mode when the output load exceeds the current−limit threshold or a short is present. The current−limit threshold is internally fixed. The power−switches rise and fall times are controlled to minimize current ringing during switching.

The $\overline{\text{FLAG}}$ logic output asserts low during overcurrent or overtemperature conditions. The switch is controlled by a logic enable input active high or low.

Features

- 2.5 V – 5.5 V Operating Range
- 80 mΩ High−Side MOSFET
- Current Limit: Fixed 500 mA, 1 A and 1.5 A
- Undervoltage Lock−Out (UVLO)
- Soft−Start Prevents Inrush Current
- Thermal Protection
- Soft Turn−Off
- Enable Active High or Low (EN or $\overline{\text{EN}}$)
- Compliance to IEC61000−4−2 (Level 4)
  - 8.0 kV (Contact)
  - 15 kV (Air)
- UL Listed for SOIC package (NCP382xDxxxx) − File No. E343275
- IEC60950 − Edition 2 − for SOIC package (NCP382xDxxxx) − Amendments 1 & 2 Certified (CB Scheme)
- These are Pb−Free Devices

Typical Applications

- Laptops
- USB Ports/Hubs
- TVs

ON Semiconductor®

www.onsemi.com

MARKING DIAGRAM



SOIC−8 NB
CASE 751

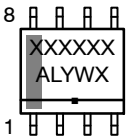

XXXXX = Specific Device Code
A = Assembly Location
L = Wafer Lot
Y = Year
W = Work Week
▪ = Pb−Free Package

(Note: Microdot may be in either location)

ORDERING INFORMATION

See detailed ordering and shipping information in the package dimensions section on page 10 of this data sheet.

© Semiconductor Components Industries, LLC, 2016

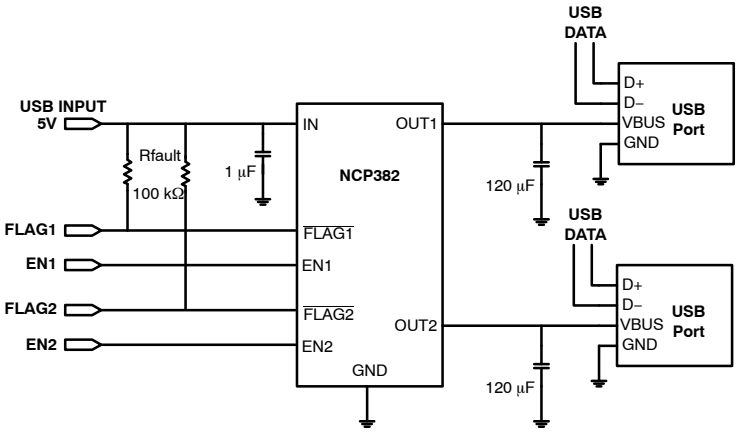

Figure 1. Typical Application Circuit

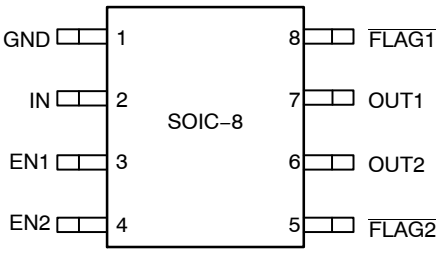

Figure 2. Pin Connections

PIN FUNCTION DESCRIPTION

Pin Name	Type	Description
EN1	I	Enable 1 input, logic low/high (i.e. $\overline{EN}$ or EN) turns on power switch.
EN2	I	Enable 2 input, logic low/high (i.e. $\overline{EN}$ or EN) turns on power switch.
GND	P	Ground connection.
IN	P	Power−switch input voltage; connect a 1 μF or greater ceramic capacitor from IN to GND as close as possible to the IC.
$\overline{FLAG1}$	O	Active−low open−drain output 1, asserted during overcurrent or overtemperature conditions. Connect a 10 kΩ or greater resistor pull−up, otherwise leave unconnected.
$\overline{FLAG2}$	O	Active−low open−drain output 2, asserted during overcurrent or overtemperature conditions. Connect a 10 kΩ or greater resistor pull−up, otherwise leave unconnected.
OUT1	O	Power−switch output1; connect a 1 μF ceramic capacitor from OUT1 to GND, as close as possible to the IC. This minimum value is recommended for USB requirement in terms of load transient response and strong short circuits.
OUT2	O	Power−switch output2; connect a 1 μF ceramic capacitor from OUT2 to GND, as close as possible to the IC. This minimum value is recommended for USB requirement in terms of load transient response and strong short circuits.

MAXIMUM RATINGS

Rating	Symbol	Value	Unit
From IN to OUT1, From IN to OUT2 Supply Voltage (Note 1)	V_{IN} , V_{OUT1},V_{OUT2}	−7.0 to +7.0	V
IN, OUT1,OUT2, EN1, EN2, $\overline{FLAG1}$, $\overline{FLAG2}$ (Note 1)	V_{IN}, V_{OUT1}, V_{OUT2}, V_{EN1}, V_{EN2}, V_{FLAG1}, V_{FLAG2}	−0.3 to +7.0	V
$\overline{FLAG1}$, $\overline{FLAG2}$ sink current	I_{SINK}	1.0	mA
ESD Withstand Voltage (IEC 61000−4−2) (output only, when bypassed with 1.0 μF capacitor minimum)	ESD IEC	15 Air, 8 contact	kV
Human Body Model (HBM) ESD Rating are (Note 2)	ESD HBM	2000	V
Machine Model (MM) ESD Rating are (Note 2)	ESD MM	200	V
Latch−up protection (Note 3) − Pins IN, OUT1, OUT2, $\overline{FLAG1}$, $\overline{FLAG2}$ − EN1, EN2	LU	100	mA
Maximum Junction Temperature (Note 4)	T_J	−40 to + TSD	°C
Storage Temperature Range	T_{STG}	−40 to + 150	°C
Moisture Sensitivity (Note 5)	MSL	Level 1	

Stresses exceeding those listed in the Maximum Ratings table may damage the device. If any of these limits are exceeded, device functionality should not be assumed, damage may occur and reliability may be affected.

1. According to JEDEC standard JESD22−A108.
2. This device series contains ESD protection and passes the following tests:
   Human Body Model (HBM) +/−2.0 kV per JEDEC standard: JESD22−A114 for all pins.
   Machine Model (MM) +/−200 V per JEDEC standard: JESD22−A115 for all pins.
3. Latch up Current Maximum Rating: ±100 mA per JEDEC standard: JESD78 class II.
4. A thermal shutdown protection avoids irreversible damage on the device due to power dissipation.
5. Moisture Sensitivity Level (MSL): 1 per IPC/JEDEC standard: J−STD−020.

OPERATING CONDITIONS

Symbol	Parameter	Conditions	Min	Typ	Max	Unit
V_{IN}	Operational Power Supply		2.5		5.5	V
V_{ENX}	Enable Voltage		0		5.5	
T_A	Ambient Temperature Range		−40	25	+85	°C
I_{SINK}	$\overline{FLAG}$ sink current				1	mA
C_{IN}	Decoupling input capacitor		1			μF
C_{OUTX}	Decoupling output capacitor	USB port per Hub	120			μF
$R_{\theta JA}$	Thermal Resistance Junction−to−Air	(Notes 6 and 7)		210		°C/W
T_J	Junction Temperature Range		−40	25	+125	°C
I_{OUTX}	Recommended Maximum DC current				1.5	A
P_D	Power Dissipation Rating (Note 8)	$T_A \le 25°C$	570			mW
		$T_A = 85°C$	285			mW

6. A thermal shutdown protection avoids irreversible damage on the device due to power dissipation.
7. The $R_{\theta JA}$ is dependent of the PCB heat dissipation. Announced thermal resistance is the unless PCB dissipation and can be improve with final PCB layout.
8. The maximum power dissipation (P_D) is given by the following formula:

$$P_D = \frac{T_{JMAX} - T_A}{R_{\theta JA}}$$

ELECTRICAL CHARACTERISTICS Min & Max Limits apply for T_A between −40°C to +85°C and T_J up to + 125°C for V_{IN} between 2.5 V to 5.5 V (Unless otherwise noted). Typical values are referenced to T_A = + 25°C and V_{IN} = 5 V.

Symbol	Parameter	Conditions		Min	Typ	Max	Unit
POWER SWITCH							
$R_{DS(on)}$	Static drain−source on−state resistance	T_J = 25°C, V_{IN} = 3.6 V to 5 V			80	110	mΩ
		V_{IN} = 5 V	−40°C < T_J < 125°C			140	
T_R	Output rise time	V_{IN} = 5 V	C_{LOAD} = 1 μF, R_{LOAD} = 100 Ω (Note 9)	0.3	1.0	1.5	ms
		V_{IN} = 2.5 V		0.2	0.65	1.0	
T_F	Output fall time	V_{IN} = 5 V		0.1		0.5	
		V_{IN} = 2.5 V		0.1		0.5	
ENABLE INPUT ENx OR $\overline{ENx}$							
V_{IH}	High−level input voltage			1.2			V
V_{IL}	Low−level input voltage					0.4	V
I_{ENx}	Input current	V_{ENx} = 0 V, $V_{\overline{ENx}}$ = 5 V		−0.5		0.5	μA
T_{ON}	Turn on time	C_{LOAD} = 1 μF, R_{LOAD} = 100 Ω (Note 9)		1.0		3.0	ms
T_{OFF}	Turn off time			1.0		3.0	ms
CURRENT LIMIT							
I_{OCP}	Current−limit threshold (Maximum DC output current I_{OUTX} delivered to load)	V_{IN} = 5 V, Fixed 0.5 A		0.5	0.6	0.7	A
		V_{IN} = 5 V, Fixed 1.0 A		1.0	1.2	1.4	
		V_{IN} = 5 V, Fixed 1.5 A		1.5	1.75	2.0	
T_{DET}	Response time to short circuit	V_{IN} = 5 V			2.0		μs
T_{REG}	Regulation time			2.0	3.0	4.0	ms
T_{OCP}	Over current protection time			14	20	26	ms
UNDERVOLTAGE LOCKOUT							
V_{UVLO}	IN pin low−level input voltage	V_{IN} rising		2.0	2.35	2.5	V
V_{HYST}	IN pin hysteresis	T_J = 25°C		25	40	60	mV
T_{RUVLO}	Re−arming Time	V_{IN} rising		5.0	10	15	ms
SUPPLY CURRENT							
I_{INOFF}	Low−level output supply current	V_{IN} = 5 V, No load on OUTX, Device OFF V_{ENX} = 0 V or $V_{\overline{ENX}}$ = 5 V			2.0	3.0	μA
I_{INON}	High−level output supply current	0.5 A	T_J = 25°C T_J = 85°C			95 100	μA
		1 and 1.5 A	T_J = 25°C T_J = 85°C			115 125	
I_{REV}	Reverse leakage current	V_{OUTX} = 5 V, V_{IN} = 0 V	T_J = 25°C		1.0	2.0	μA
$\overline{FLAG}$ PIN							
V_{OL}	$\overline{FLAGX}$ output low voltage	$I_{\overline{FLAGX}}$ = 1 mA				400	mV
I_{LEAK}	Off−state leakage	$V_{\overline{FLAGX}}$ = 5 V			0.02	1	μA
T_{FLG}	$\overline{FLAGX}$ deglitch	$\overline{FLAGX}$ de−assertion time due to overcurrent		4	6	9	ms
T_{FOCP}	$\overline{FLAGX}$ deglitch	$\overline{FLAGX}$ assertion due to overcurrent		6	8	12	ms
THERMAL SHUTDOWN							
T_{SD}	Thermal shutdown threshold				140		°C
T_{SDOCP}	Thermal regulation threshold				125		°C
T_{RSD}	Thermal regulation rearming threshold				115		°C

9. Parameters are guaranteed for C_{LOAD} and R_{LOAD} connected to the OUTX pin with respect to the ground.
10. Guaranteed by characterization.

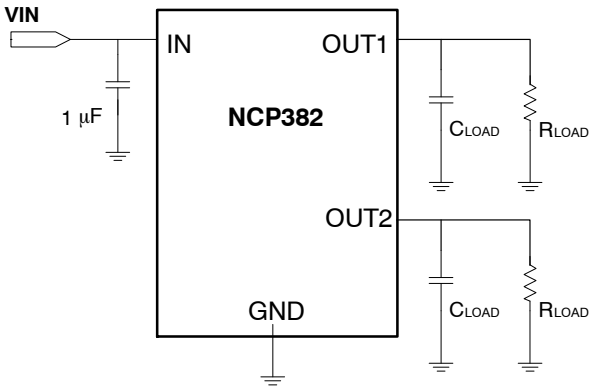

Figure 3. Test Configuration

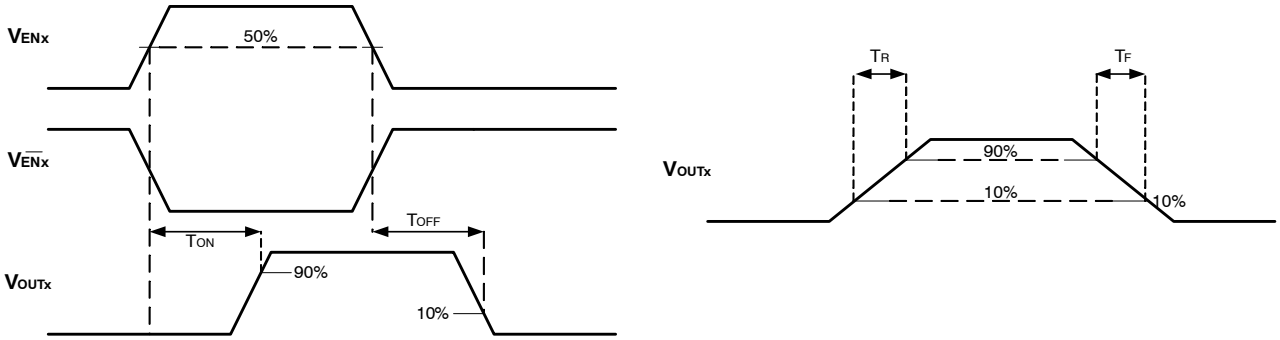

Figure 4. Voltage Waveform

BLOCK DIAGRAM

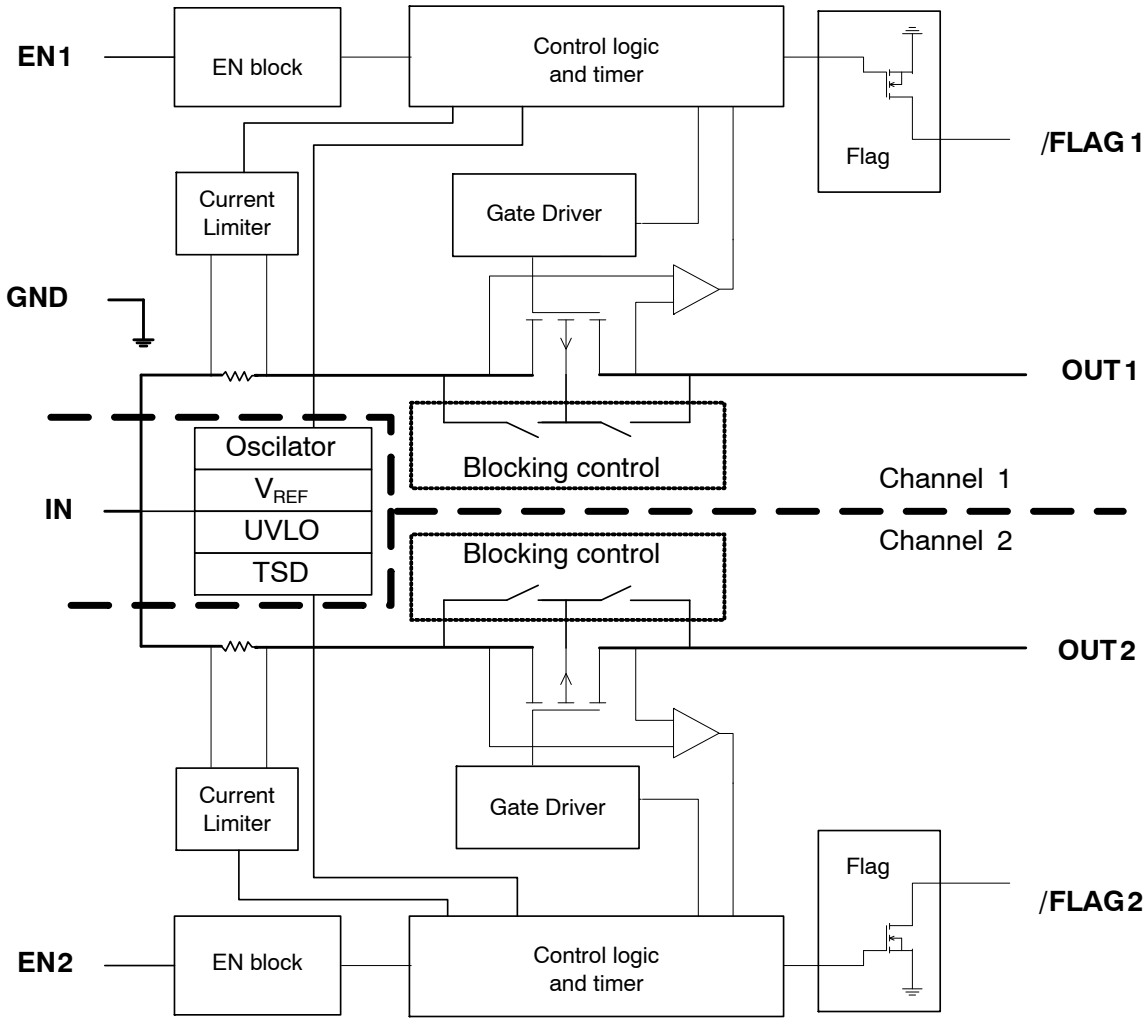

Figure 5. Block Diagram

FUNCTIONAL DESCRIPTION

Overview

The NCP382 is a dual high side power distribution switches designed to protect the input supply voltage in case of heavy capacitive loads, short circuit or over current. In addition, the high side MOSFETs are turned off during undervoltage or thermal shutdown condition. Thanks to the soft start circuitry, NCP382 is able to limit large current and voltage surges.

Overcurrent Protection

NCP382 switches into a constant current regulation mode when the output current is above the I_{OCP} threshold. Depending on the load, the output voltage is decreased accordingly.

– In case of hot plug with heavy capacitive load, the output voltage is brought down to the capacitor voltage. The NCP382 will limit the current to the I_{OCP} threshold value until the charge of the capacitor is completed.

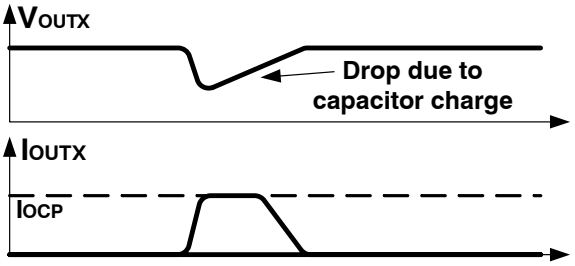

Figure 6. Heavy Capacitive Load

– In case of overload, the current is limited to the I_{OCP} value and the voltage value is reduced according to the load by the following relation:

$$V_{OUTX} = R_{LOAD2} \times I_{OCP} \quad \text{(eq. 1)}$$

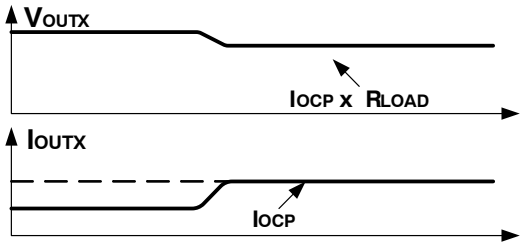

Figure 7. Overload

– In case of short circuit or huge load, the current is limited to the I_{OCP} value within T_{DET} time until the short condition is removed. If the output remains shorted or tied to a very low voltage, the junction temperature of the chip exceeds T_{SDOCP} value and the device enters in thermal shutdown (MOSFET is turned−off).

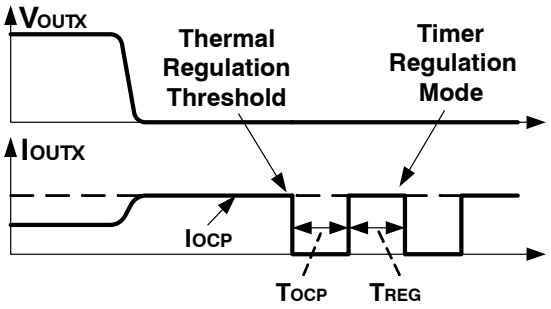

Figure 8. Short−Circuit

Then, the device enters in timer regulation mode, described in 2 phases:

– Off−phase: Power MOSFET is off during T_{OCP} to allow the die temperature to drop.

– On−phase: regulation current mode during T_{REG}. The current is regulated to the I_{OCP} level.

The timer regulation mode allows the device to handle high thermal dissipation (in case of short circuit for example) within temperature operating condition.

NCP382 stays in on−phase/off−phase loop until the over current condition is removed or enable pin is toggled.

Remark: other regulation modes can be available for different applications. Please contact our On Semiconductor representative for availability.

$\overline{\text{FLAG}}$ Indicator

The $\overline{\text{FLAG}}$ pin is an open−drain MOSFET asserted low during overcurrent or overtemperature conditions. When an overcurrent fault is detected on the power path, $\overline{\text{FLAG}}$ pin is asserted low at the end of the associate deglitch time (TFOCP). Thanks to this feature, the $\overline{\text{FLAG}}$ pin is not tied low during the charge of a heavy capacitive load or a voltage transient on output. The $\overline{\text{FLAG}}$ pin remains low until the fault is removed. Then, the $\overline{\text{FLAG}}$ pin goes high at the end of T_{FGL}

Undervoltage Lock−out

Thanks to a built−in under voltage lockout (UVLO) circuitry, the output remains disconnected from input until V_{IN} voltage is above V_{UVLO}. This circuit has a V_{HYST} hysteresis witch provides noise immunity to transient condition.

Thermal Sense

Thermal shutdown turns off the power MOSFET if the die temperature exceeds T_{SD}. A built-in hysteresis prevents the part from turning on until the die temperature cools at TRSD.

Enable Input

Enable pin must be driven by a logic signal (CMOS or TTL compatible) or connected to the GND or VIN. A logic low on $\overline{ENX}$ or high on ENX turns−on the device. A logic high on $\overline{ENX}$ or low on ENX turns off device and reduces the current consumption down to I_{INOFF}.

Blocking Control

The blocking control circuitry switches the bulk of the power MOS. When the part is off, the body diode limits the leakage current I_{REV} from OUTX to IN. In this mode, anode of the body diode is connected to IN pin and cathode is connected to OUTX pin. In operating condition, anode of the body diode is connected to OUTX pin and cathode is connected to IN pin preventing the discharge of the power supply.

APPLICATION INFORMATION

Power Dissipation

The junction temperature of the device depends on different contributing factors such as board layout, ambient temperature, device environment, etc... Yet, the main contributor in term of junction temperature is the power dissipation of the power MOSFET. Assuming this, the power dissipation and the junction temperature in normal mode can be calculated with the following equations:

$$P_D = R_{DS(on)} \times \left(\left(I_{OUT1}\right)^2 + \left(I_{OUT2}\right)^2 \right) \quad \text{(eq. 2)}$$

P_D = Power dissipation (W)
$R_{DS(on)}$ = Power MOSFET on resistance (Ω)
I_{OUTx} = Output current in channel X (A)

$$T_J = P_D \times R_{\theta JA} + T_A \quad \text{(eq. 3)}$$

T_J = Junction temperature (°C)
$R_{\theta JA}$ = Package thermal resistance (°C/W)
T_A = Ambient temperature (°C)

Power dissipation in regulation mode can be calculated by taking into account the drop $V_{IN} - V_{OUTX}$ link to the load by the following relation:

$$P_D = \left(\left(V_{IN} - R_{LOAD1} \times I_{OCP}\right) + \left(V_{IN} - R_{LOAD2} \times I_{OCP}\right) \right) \times I_{OCP} \quad \text{(eq. 4)}$$

P_D = Power dissipation (W)
V_{IN} = Input Voltage (V)
R_{LOADX} = Load Resistance on channel X (Ω)
I_{OCP} = Output regulated current (A)

PCB Recommendations

The NCP382 integrates two PMOS FET rated up to 1.5 A, and the PCB design rules must be respected to properly evacuate the heat out of the silicon. By increasing PCB area, the $R_{\theta JA}$ of the package can be decreased, allowing higher current.

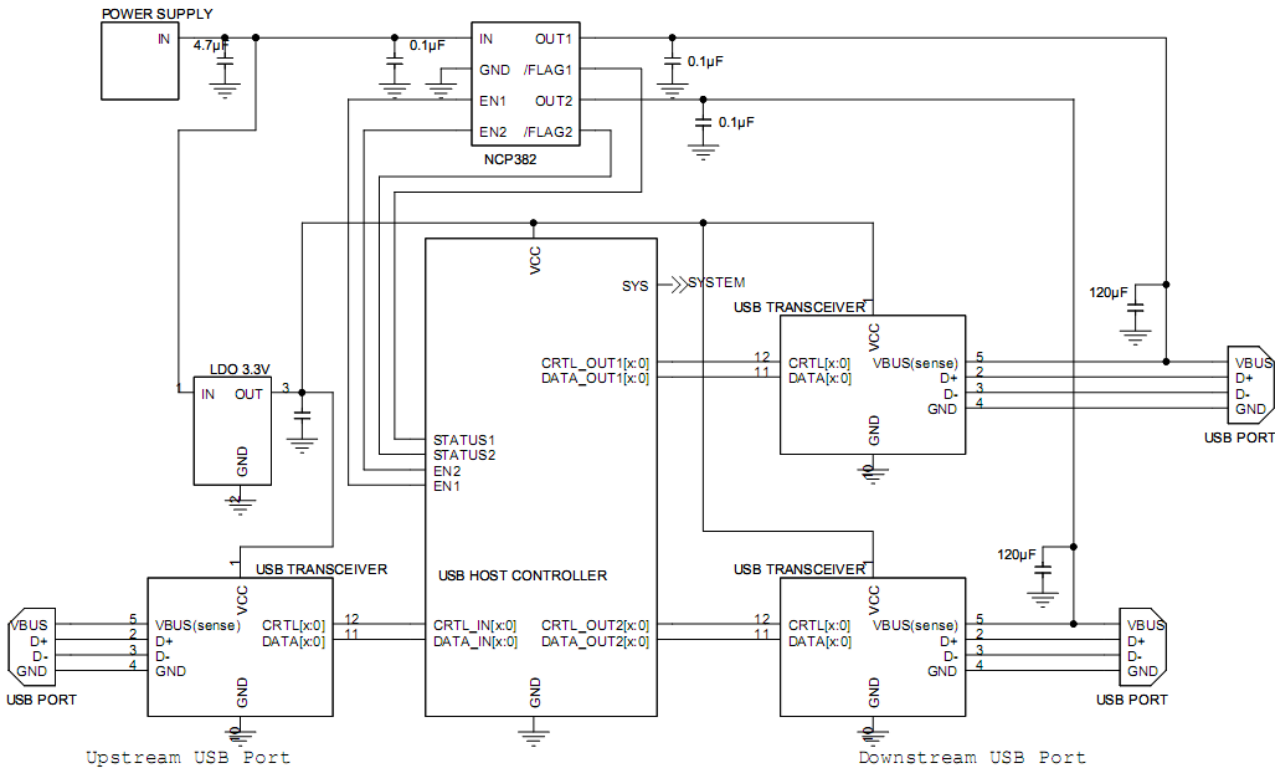

Figure 9. USB Host Typical Application

ORDERING INFORMATION

Device	Marking	Active Enable Level	Over Current Limit	Evaluation Board	UL 2367	IEC60950 Ed2 (CB Scheme)	IEC60950 Ed2 Ad1, Ad2	Package	Shipping†
NCP382LD05AAR2G	382L05	ENx Low	0.5 A	NCP382LD05AAGEVB	Y	Y	Y	SOIC−8 (Pb−Free)	2500 / Tape / Reel
NCP382LD10AAR2G	382L10		1.0 A	NCP382LD10AAGEVB	Y	Y	Y		
NCP382LD15AAR2G	382L15		1.5 A	NCP382LD15AAGEVB	Y	Y	Y		
NCP382HD05AAR2G	382H05	ENx High	0.5 A	NCP382HD05AAGEVB	Y	Y	Y		
NCP382HD10AAR2G	382H10		1.0 A	NCP382HD10AAGEVB	Y	Y	Y		
NCP382HD15AAR2G	382H15		1.5 A	NCP382HD15AAGEVB	Y	Y	Y		

†For information on tape and reel specifications, including part orientation and tape sizes, please refer to our Tape and Reel Packaging Specifications Brochure, BRD8011/D.

MECHANICAL CASE OUTLINE
PACKAGE DIMENSIONS



SCALE 1:1

SOIC−8 NB
CASE 751−07
ISSUE AK

DATE 16 FEB 2011

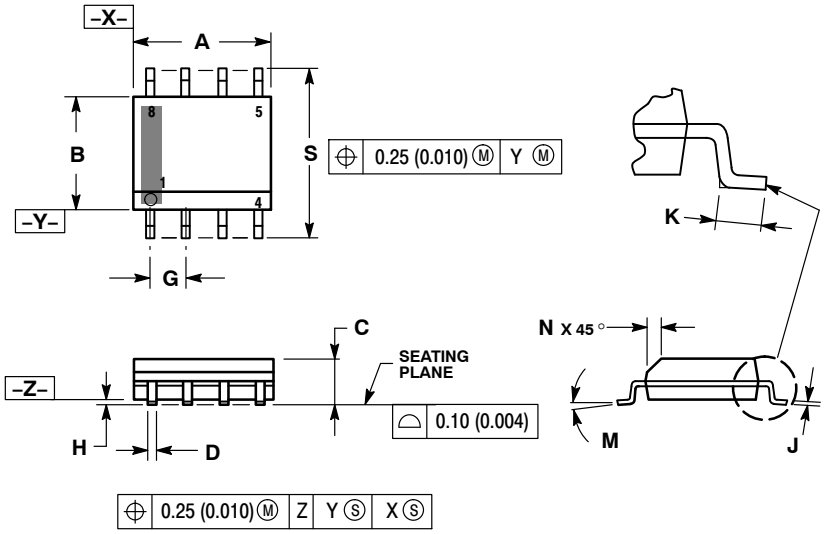

NOTES:
1. DIMENSIONING AND TOLERANCING PER ANSI Y14.5M, 1982.
2. CONTROLLING DIMENSION: MILLIMETER.
3. DIMENSION A AND B DO NOT INCLUDE MOLD PROTRUSION.
4. MAXIMUM MOLD PROTRUSION 0.15 (0.006) PER SIDE.
5. DIMENSION D DOES NOT INCLUDE DAMBAR PROTRUSION. ALLOWABLE DAMBAR PROTRUSION SHALL BE 0.127 (0.005) TOTAL IN EXCESS OF THE D DIMENSION AT MAXIMUM MATERIAL CONDITION.
6. 751−01 THRU 751−06 ARE OBSOLETE. NEW STANDARD IS 751−07.

	MILLIMETERS		INCHES	
DIM	MIN	MAX	MIN	MAX
A	4.80	5.00	0.189	0.197
B	3.80	4.00	0.150	0.157
C	1.35	1.75	0.053	0.069
D	0.33	0.51	0.013	0.020
G	1.27 BSC		0.050 BSC	
H	0.10	0.25	0.004	0.010
J	0.19	0.25	0.007	0.010
K	0.40	1.27	0.016	0.050
M	0 °	8 °	0 °	8 °
N	0.25	0.50	0.010	0.020
S	5.80	6.20	0.228	0.244

SOLDERING FOOTPRINT*

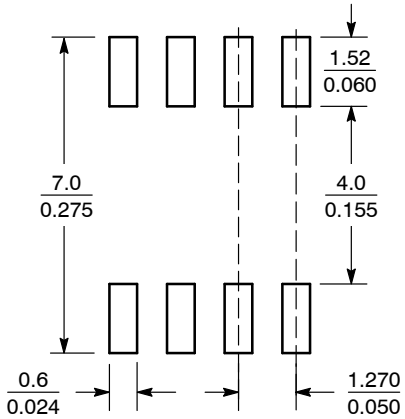

SCALE 6:1 (mm / inches)

*For additional information on our Pb−Free strategy and soldering details, please download the ON Semiconductor Soldering and Mounting Techniques Reference Manual, SOLDERRM/D.

GENERIC MARKING DIAGRAM*

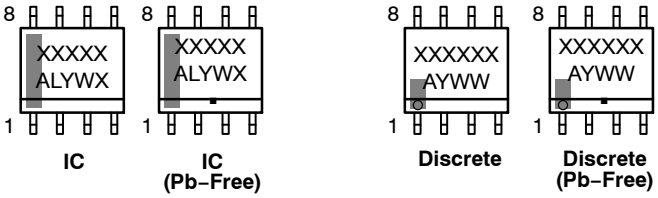

IC | IC (Pb−Free) | Discrete | Discrete (Pb−Free)

XXXXX = Specific Device Code
A = Assembly Location
L = Wafer Lot
Y = Year
W = Work Week
▪ = Pb−Free Package

XXXXXX = Specific Device Code
A = Assembly Location
Y = Year
WW = Work Week
▪ = Pb−Free Package

*This information is generic. Please refer to device data sheet for actual part marking. Pb−Free indicator, "G" or microdot "▪", may or may not be present. Some products may not follow the Generic Marking.

STYLES ON PAGE 2

DOCUMENT NUMBER:	**98ASB42564B**	Electronic versions are uncontrolled except when accessed directly from the Document Repository. Printed versions are uncontrolled except when stamped "CONTROLLED COPY" in red.
DESCRIPTION:	**SOIC−8 NB**	**PAGE 1 OF 2**

onsemi and onsemi are trademarks of Semiconductor Components Industries, LLC dba **onsemi** or its subsidiaries in the United States and/or other countries. **onsemi** reserves the right to make changes without further notice to any products herein. **onsemi** makes no warranty, representation or guarantee regarding the suitability of its products for any particular purpose, nor does **onsemi** assume any liability arising out of the application or use of any product or circuit, and specifically disclaims any and all liability, including without limitation special, consequential or incidental damages. **onsemi** does not convey any license under its patent rights nor the rights of others.

© Semiconductor Components Industries, LLC, 2019

SOIC−8 NB
CASE 751−07
ISSUE AK

DATE 16 FEB 2011

STYLE 1:
PIN 1. EMITTER
2. COLLECTOR
3. COLLECTOR
4. EMITTER
5. EMITTER
6. BASE
7. BASE
8. EMITTER

STYLE 2:
PIN 1. COLLECTOR, DIE, #1
2. COLLECTOR, #1
3. COLLECTOR, #2
4. COLLECTOR, #2
5. BASE, #2
6. EMITTER, #2
7. BASE, #1
8. EMITTER, #1

STYLE 3:
PIN 1. DRAIN, DIE #1
2. DRAIN, #1
3. DRAIN, #2
4. DRAIN, #2
5. GATE, #2
6. SOURCE, #2
7. GATE, #1
8. SOURCE, #1

STYLE 4:
PIN 1. ANODE
2. ANODE
3. ANODE
4. ANODE
5. ANODE
6. ANODE
7. ANODE
8. COMMON CATHODE

STYLE 5:
PIN 1. DRAIN
2. DRAIN
3. DRAIN
4. DRAIN
5. GATE
6. GATE
7. SOURCE
8. SOURCE

STYLE 6:
PIN 1. SOURCE
2. DRAIN
3. DRAIN
4. SOURCE
5. SOURCE
6. GATE
7. GATE
8. SOURCE

STYLE 7:
PIN 1. INPUT
2. EXTERNAL BYPASS
3. THIRD STAGE SOURCE
4. GROUND
5. DRAIN
6. GATE 3
7. SECOND STAGE Vd
8. FIRST STAGE Vd

STYLE 8:
PIN 1. COLLECTOR, DIE #1
2. BASE, #1
3. BASE, #2
4. COLLECTOR, #2
5. COLLECTOR, #2
6. EMITTER, #2
7. EMITTER, #1
8. COLLECTOR, #1

STYLE 9:
PIN 1. EMITTER, COMMON
2. COLLECTOR, DIE #1
3. COLLECTOR, DIE #2
4. EMITTER, COMMON
5. EMITTER, COMMON
6. BASE, DIE #2
7. BASE, DIE #1
8. EMITTER, COMMON

STYLE 10:
PIN 1. GROUND
2. BIAS 1
3. OUTPUT
4. GROUND
5. GROUND
6. BIAS 2
7. INPUT
8. GROUND

STYLE 11:
PIN 1. SOURCE 1
2. GATE 1
3. SOURCE 2
4. GATE 2
5. DRAIN 2
6. DRAIN 2
7. DRAIN 1
8. DRAIN 1

STYLE 12:
PIN 1. SOURCE
2. SOURCE
3. SOURCE
4. GATE
5. DRAIN
6. DRAIN
7. DRAIN
8. DRAIN

STYLE 13:
PIN 1. N.C.
2. SOURCE
3. SOURCE
4. GATE
5. DRAIN
6. DRAIN
7. DRAIN
8. DRAIN

STYLE 14:
PIN 1. N−SOURCE
2. N−GATE
3. P−SOURCE
4. P−GATE
5. P−DRAIN
6. P−DRAIN
7. N−DRAIN
8. N−DRAIN

STYLE 15:
PIN 1. ANODE 1
2. ANODE 1
3. ANODE 1
4. ANODE 1
5. CATHODE, COMMON
6. CATHODE, COMMON
7. CATHODE, COMMON
8. CATHODE, COMMON

STYLE 16:
PIN 1. EMITTER, DIE #1
2. BASE, DIE #1
3. EMITTER, DIE #2
4. BASE, DIE #2
5. COLLECTOR, DIE #2
6. COLLECTOR, DIE #2
7. COLLECTOR, DIE #1
8. COLLECTOR, DIE #1

STYLE 17:
PIN 1. VCC
2. V2OUT
3. V1OUT
4. TXE
5. RXE
6. VEE
7. GND
8. ACC

STYLE 18:
PIN 1. ANODE
2. ANODE
3. SOURCE
4. GATE
5. DRAIN
6. DRAIN
7. CATHODE
8. CATHODE

STYLE 19:
PIN 1. SOURCE 1
2. GATE 1
3. SOURCE 2
4. GATE 2
5. DRAIN 2
6. MIRROR 2
7. DRAIN 1
8. MIRROR 1

STYLE 20:
PIN 1. SOURCE (N)
2. GATE (N)
3. SOURCE (P)
4. GATE (P)
5. DRAIN
6. DRAIN
7. DRAIN
8. DRAIN

STYLE 21:
PIN 1. CATHODE 1
2. CATHODE 2
3. CATHODE 3
4. CATHODE 4
5. CATHODE 5
6. COMMON ANODE
7. COMMON ANODE
8. CATHODE 6

STYLE 22:
PIN 1. I/O LINE 1
2. COMMON CATHODE/VCC
3. COMMON CATHODE/VCC
4. I/O LINE 3
5. COMMON ANODE/GND
6. I/O LINE 4
7. I/O LINE 5
8. COMMON ANODE/GND

STYLE 23:
PIN 1. LINE 1 IN
2. COMMON ANODE/GND
3. COMMON ANODE/GND
4. LINE 2 IN
5. LINE 2 OUT
6. COMMON ANODE/GND
7. COMMON ANODE/GND
8. LINE 1 OUT

STYLE 24:
PIN 1. BASE
2. EMITTER
3. COLLECTOR/ANODE
4. COLLECTOR/ANODE
5. CATHODE
6. CATHODE
7. COLLECTOR/ANODE
8. COLLECTOR/ANODE

STYLE 25:
PIN 1. VIN
2. N/C
3. REXT
4. GND
5. IOUT
6. IOUT
7. IOUT
8. IOUT

STYLE 26:
PIN 1. GND
2. dv/dt
3. ENABLE
4. ILIMIT
5. SOURCE
6. SOURCE
7. SOURCE
8. VCC

STYLE 27:
PIN 1. ILIMIT
2. OVLO
3. UVLO
4. INPUT+
5. SOURCE
6. SOURCE
7. SOURCE
8. DRAIN

STYLE 28:
PIN 1. SW_TO_GND
2. DASIC_OFF
3. DASIC_SW_DET
4. GND
5. V_MON
6. VBULK
7. VBULK
8. VIN

STYLE 29:
PIN 1. BASE, DIE #1
2. EMITTER, #1
3. BASE, #2
4. EMITTER, #2
5. COLLECTOR, #2
6. COLLECTOR, #2
7. COLLECTOR, #1
8. COLLECTOR, #1

STYLE 30:
PIN 1. DRAIN 1
2. DRAIN 1
3. GATE 2
4. SOURCE 2
5. SOURCE 1/DRAIN 2
6. SOURCE 1/DRAIN 2
7. SOURCE 1/DRAIN 2
8. GATE 1

DOCUMENT NUMBER:	**98ASB42564B**	Electronic versions are uncontrolled except when accessed directly from the Document Repository. Printed versions are uncontrolled except when stamped "CONTROLLED COPY" in red.	
DESCRIPTION:	**SOIC−8 NB**		**PAGE 2 OF 2**

onsemi and ONSEMI. are trademarks of Semiconductor Components Industries, LLC dba **onsemi** or its subsidiaries in the United States and/or other countries. **onsemi** reserves the right to make changes without further notice to any products herein. **onsemi** makes no warranty, representation or guarantee regarding the suitability of its products for any particular purpose, nor does **onsemi** assume any liability arising out of the application or use of any product or circuit, and specifically disclaims any and all liability, including without limitation special, consequential or incidental damages. **onsemi** does not convey any license under its patent rights nor the rights of others.

© Semiconductor Components Industries, LLC, 2019

onsemi, , and other names, marks, and brands are registered and/or common law trademarks of Semiconductor Components Industries, LLC dba "**onsemi**" or its affiliates and/or subsidiaries in the United States and/or other countries. **onsemi** owns the rights to a number of patents, trademarks, copyrights, trade secrets, and other intellectual property. A listing of **onsemi**'s product/patent coverage may be accessed at www.onsemi.com/site/pdf/Patent−Marking.pdf. **onsemi** reserves the right to make changes at any time to any products or information herein, without notice. The information herein is provided "as−is" and **onsemi** makes no warranty, representation or guarantee regarding the accuracy of the information, product features, availability, functionality, or suitability of its products for any particular purpose, nor does **onsemi** assume any liability arising out of the application or use of any product or circuit, and specifically disclaims any and all liability, including without limitation special, consequential or incidental damages. Buyer is responsible for its products and applications using **onsemi** products, including compliance with all laws, regulations and safety requirements or standards, regardless of any support or applications information provided by **onsemi**. "Typical" parameters which may be provided in **onsemi** data sheets and/or specifications can and do vary in different applications and actual performance may vary over time. All operating parameters, including "Typicals" must be validated for each customer application by customer's technical experts. **onsemi** does not convey any license under any of its intellectual property rights nor the rights of others. **onsemi** products are not designed, intended, or authorized for use as a critical component in life support systems or any FDA Class 3 medical devices or medical devices with a same or similar classification in a foreign jurisdiction or any devices intended for implantation in the human body. Should Buyer purchase or use **onsemi** products for any such unintended or unauthorized application, Buyer shall indemnify and hold **onsemi** and its officers, employees, subsidiaries, affiliates, and distributors harmless against all claims, costs, damages, and expenses, and reasonable attorney fees arising out of, directly or indirectly, any claim of personal injury or death associated with such unintended or unauthorized use, even if such claim alleges that **onsemi** was negligent regarding the design or manufacture of the part. **onsemi** is an Equal Opportunity/Affirmative Action Employer. This literature is subject to all applicable copyright laws and is not for resale in any manner.

ADDITIONAL INFORMATION

TECHNICAL PUBLICATIONS:
Technical Library: www.onsemi.com/design/resources/technical−documentation
onsemi Website: www.onsemi.com

ONLINE SUPPORT: www.onsemi.com/support
For additional information, please contact your local Sales Representative at www.onsemi.com/support/sales