TE750B27RJ ✔ ACTIVE

CGS | CGS TE

TE Internal #: 1-1879452-8

Power Resistor, 27 Ω, 750 W, Wire Wound, 2 Termination, ±440 ppm /°C, 5 %, Solder Lug Termination, Loose Piece - Box, 1 Resistor, CGS TE

View on TE.com >

Passive Components > Resistors > Chassis Mount Resistors > Wirewound Resistor: Mineral, 2.5 Kw



Resistor Type: **Power Resistor**

Resistance Class: **Up to 1kΩ**

Resistance Value: **27 Ω**

Power Rating: **750 W**

Element Type: **Wire Wound**

All Wirewound Resistor: Mineral, 2.5 Kw (685)

Features

Product Type Features

Resistor Type	Power Resistor
Element Type	Wire Wound

Configuration Features

Number of Resistors	1

Electrical Characteristics

Operating Voltage	2500 V
Resistance Class	Up to 1kΩ
Resistance Value	27 Ω
Power Rating	750 W
Passive Component Tolerance	5 %

Termination Features

Number of Terminations	2
Chassis Mount Resistor Termination Type	Solder Lug

Mechanical Attachment

Panel Mount Feature Type	Mounting Brackets

Dimensions

Product Height	101 mm[3.976 in]
Product Length	360 mm[14.173 in]
Product Width	50 mm[1.969 in]

Usage Conditions

Operating Temperature Range	-55 - 155 °C
Temperature Coefficient	±440 ppm/°C

Packaging Features

Packaging Method	Loose Piece - Box

Product Compliance

For compliance documentation, visit the product page on TE.com>

EU RoHS Directive 2011/65/EU	Compliant
EU ELV Directive 2000/53/EC	Compliant
China RoHS 2 Directive MIIT Order No 32, 2016	No Restricted Materials Above Threshold
EU REACH Regulation (EC) No. 1907/2006	Current ECHA Candidate List: JAN 2024 (240) Candidate List Declared Against: JAN 2022 (223) Does not contain REACH SVHC
Halogen Content	Low Halogen - Br, Cl, F, I < 900 ppm per homogenous material. Also BFR/CFR/PVC Free
Solder Process Capability	Not applicable for solder process capability

Product Compliance Disclaimer

This information is provided based on reasonable inquiry of our suppliers and represents our current actual knowledge based on the information they provided. This information is subject to change. The part numbers that TE has identified as EU RoHS compliant have a maximum concentration of 0.1% by weight in homogenous materials for lead, hexavalent chromium, mercury, PBB, PBDE, DBP, BBP, DEHP, DIBP, and 0.01% for cadmium, or qualify for an exemption to these limits as defined in the Annexes of Directive 2011/65/EU (RoHS2). Finished electrical and electronic equipment products will be CE marked as required by Directive 2011/65/EU. Components may not be CE marked. Additionally, the part numbers that TE has identified as EU ELV compliant have a maximum concentration of 0.1% by weight in homogenous materials for lead, hexavalent chromium, and mercury, and 0.01% for cadmium, or qualify for an exemption to these limits as defined in the Annexes of Directive 2000/53/EC (ELV). Regarding the REACH Regulation, the information TE provides on SVHC in articles for this part number is based on the latest European Chemicals Agency (ECHA) 'Guidance on requirements for substances in articles' posted at this URL: https://echa.europa.eu/guidance-documents/guidance-on-reach

Compatible Parts

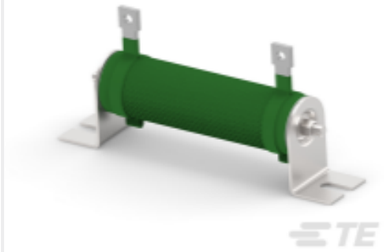

TE Part # CAT-C339-T2201
Wirewound Resistor: Mineral, 2.5 Kw

Also in the Series | CGS TE



Chassis Mount Resistors(750)



RJ11 Connectors(1)



RJ14 Connectors(4)



RJ22 Connectors(5)



RJ25 Connectors(4)



RJ45 Connectors(30)

Customers Also Bought



TE Part # T4171010004-001
M12,REAR MOUNTING,MALE,A,4P,0.2 M WIRE



TE Part # 1-1879453-5
Wirewound Resistor: Mineral, 2.5 Kw



TE Part # 1558661-3
T9GV1L14-12

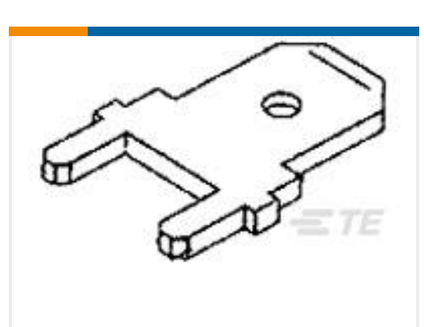

TE Part # 63603-1
187 FASTON TAB TPBR

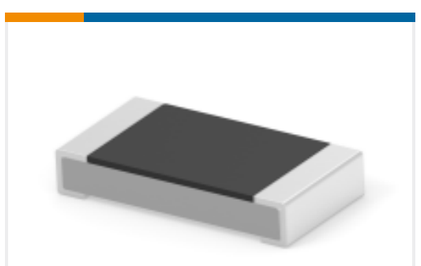

TE Part # 2176392-1
RQ 1206 133K 0.1% 10PPM 5K RL

Documents

CAD Files

3D PDF

3D

Customer View Model

ENG_CVM_CVM_1-1879452-8_BB.2d_dxf.zip

English

Customer View Model

ENG_CVM_CVM_1-1879452-8_BB.3d_igs.zip

English

Customer View Model

ENG_CVM_CVM_1-1879452-8_BB.3d_stp.zip

English

By downloading the CAD file I accept and agree to the Terms and Conditionsof use.

Datasheets & Catalog Pages

4-1773460-6_RESISTIVE_SOLUTIONS_RAIL

English

1309350_PASSIVE_COMPONENT

English

8-1773459-4_POWER_FILTERING_AND_RESISTIVE_SOLUTIONS_FOR_ELEVATORS_AND_ESCALATORS

English

High Power Wire wound Resistor Type TE Series

English