NOTES:

1. MATERIAL: POLYCARBONATE/ACRYLONITRILE-BUTADIENE-STYRENE (PC/ABS)
2. PACKAGING : 10 NUMBERS OF MODULES ARE PACKED IN A BAG.

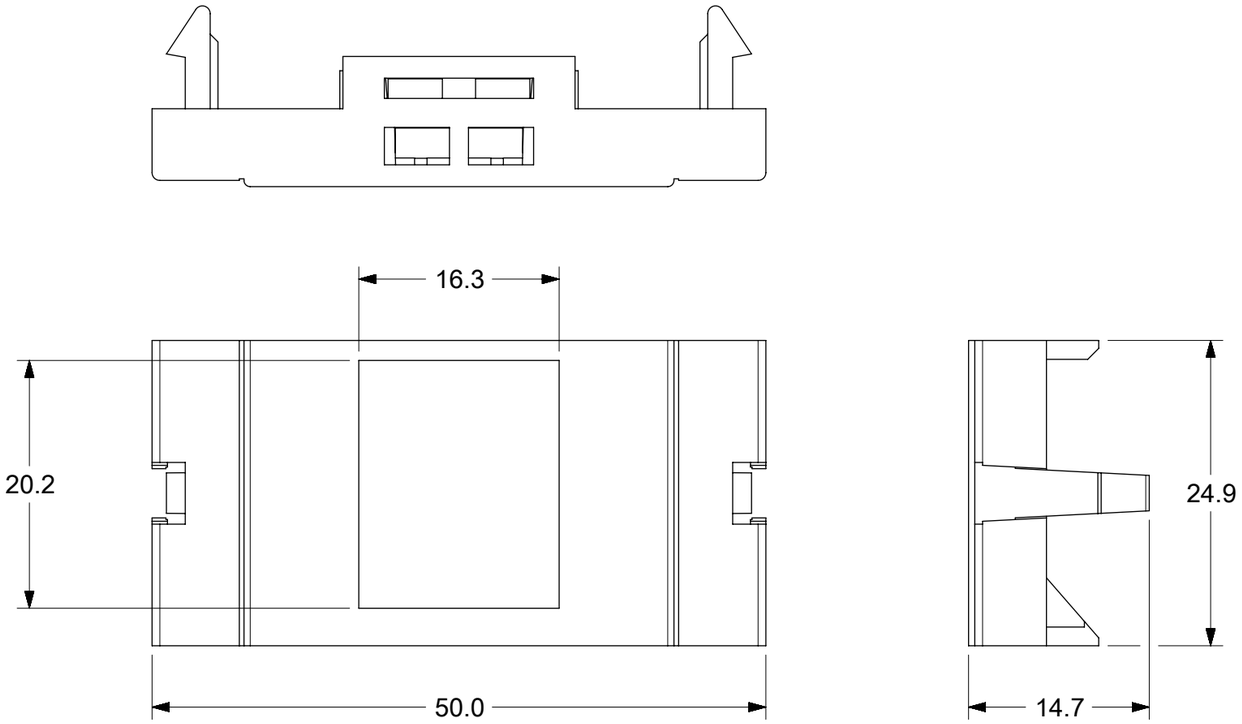

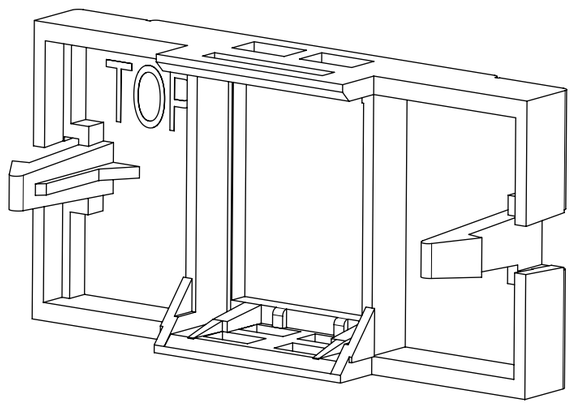

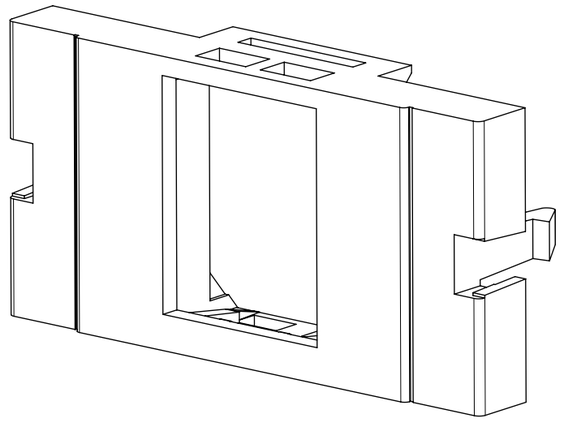

ISO VIEW

PART NUMBER CHART		
MPN NO.	SAP NO.	DESCRIPTION
MUS-00096-01	180070047	USOII 1U 1 PORT FASCIA LIGHT ALMOND
MUS-00096-02	180070048	USOII 1U 1 PORT FASCIA ASH WHITE
MUS-00096-04	180070049	USOII 1U 1 PORT FASCIA BLACK
MUS-00096-08	180070050	USOII 1U 1 PORT FASCIA PRG GRAY

THIS DRAWING CONTAINS INFORMATION THAT IS PROPRIETARY TO MOLEX ELECTRONIC TECHNOLOGIES, LLC AND SHOULD NOT BE USED WITHOUT WRITTEN PERMISSION

SYMBOLS: E = 0; C = 0; B = 0; S = 0; ▼ = 0; C = 0; ☒ = 0; ■ = 0; ▽ = 0

DIMENSION UNITS	SCALE
mm	2:1

GENERAL TOLERANCES (UNLESS SPECIFIED)

ANGULAR TOL	±	°
4 PLACES	±	
3 PLACES	±	
2 PLACES	±	
1 PLACE	±	0.51
0 PLACES	±	

DRAFT WHERE APPLICABLE MUST REMAIN WITHIN DIMENSIONS

CURRENT REV DESC:

EC NO: 613277
DRWN: NBP 2019/03/06
CHK'D: RCG 2019/04/09
APPR: RCG 2019/04/09

INITIAL REVISION:
DRWN: PS03 2010/06/01
APPR: JKUMAR 2010/06/16

THIRD ANGLE PROJECTION | DRAWING: A3-SIZE | SERIES: 18007

molex

USOII 1U 1 PORT FASCIA
- 10/BAG

PRODUCT CUSTOMER DRAWING

DOCUMENT NUMBER	DOC TYPE	DOC PART	REVISION
SD-18007-004	PSD	001	B

MATERIAL NUMBER	CUSTOMER	SHEET NUMBER
SEE TABLE	GENERAL MARKET	1 OF 1

DOCUMENT STATUS	P1	RELEASE DATE	2019/04/09 11:59:58

FORMAT: master-lb-prod-A3
REVISION: H
DATE: 2018/01/18