www.lemo.com

FGG.0B.304.CYCZ

SUMMARY

Wires

Low voltage	**4**



Image is for illustrative purpose only

Series	0B
Termination type	Male crimp
IP rating	50
AWG wire size	26.00 - 22.00
Cable Ø	0.00 - 0.00 mm
Status	obsolete
Matching parts	EGG.0B.304.CYM

Download

Request a quote

Catalog

See video assembly instructions

TECHNICAL DETAILS

Mechanics

Shell Style/Model	FG*: Straight plug, cable collet
Keying	1 key (alpha=0, plug: male contacts, receptacle: female contacts)
Housing Material	Brass (chrome plated [SAE AMS 2460]) shell and collet nut, nickel plated [SAE AMS QQ N 290] brass latch sleeve and mid pieces
Weight	9.04 g

Performance

Configuration	0B.304 : 4 Low Voltage
Insulator	Y: PEEK for crimp contacts
Rated Current	7 Amps

Specifications

Contact Type: Crimp
Contact Retention: 22 N
Contact Dia.: 0.7 mm (0.028in)
Bucket Dia.: 0.8 mm (0.031in)
Min. Conductor: 0.14 mm^2 (AWG 26)
Max. Conductor: 0.34 mm^2 (AWG 22)
R (max): 6.1 mOhm
Vtest (contact-contact): 1350 V (AC), 1910 V (DC)

LEMO products and services are provided “as is”. LEMO makes no warranties or representations with regard to LEMO product & services or use of them, express, implied or statutory, including for accuracy, completeness, or security. The user is fully responsible for his products and applications using LEMO components.

Vtest (contact-shell): 1100 V (AC), 1560 V (DC)

Others

Endurance (Shell): 5000
Temp (min / max): -55°C / +250°C
Humidity (max): <=95% [at 60 deg C /140 F]
Vibration: 15 g [10 Hz - 2000 Hz]
Shock Resistance: 100 g [6 ms]
Climatical Category: 50/175/21
Shielding (min): 75 dB (10 MHz)
Shielding (min): 40 dB (1 GHz)
Salt Spray Corrosion: >1000 hr

DRAWINGS

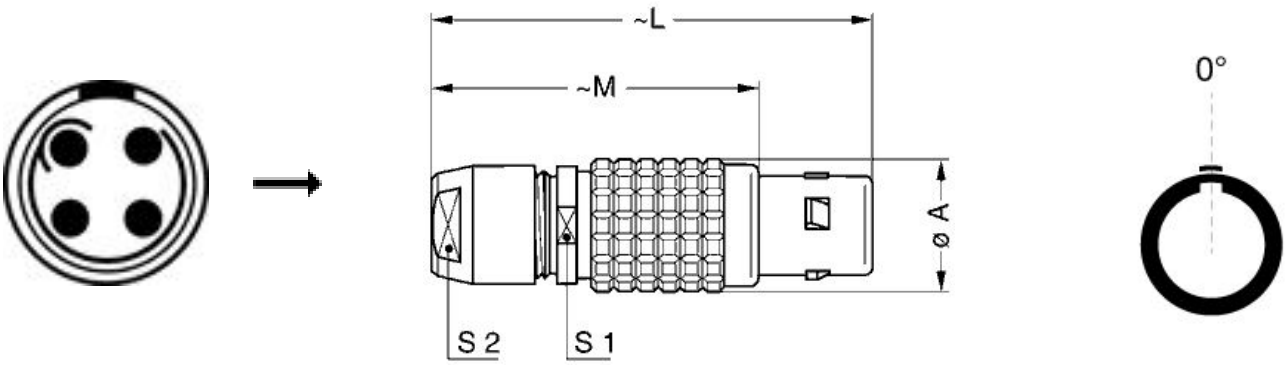

Dimensions

	A	L	M	S1	S2
mm.	9.5	36	26	8	7
in.	0,37	1,42	1,02	0,31	0,28

RECOMMENDED BY LEMO

Tools

LEMO products and services are provided “as is”. LEMO makes no warranties or representations with regard to LEMO product & services or use of them, express, implied or statutory, including for accuracy, completeness, or security. The user is fully responsible for his products and applications using LEMO components.

Crimp Tool:	DPC.91.701.V
Crimp settings:	AWG/Selector = 22-24-26/6-5-5
Positionner:	DCE.91.070.BVC
Extractor:	DCF.92.070.3LT
Replacement contact:	FGG.0B.555.ZZC
Spanner wrench:	DCD.0B.005.PA070
Caps:	BFG.0B.100.PCSG

LEMO products and services are provided “as is”. LEMO makes no warranties or representations with regard to LEMO product & services or use of them, express, implied or statutory, including for accuracy, completeness, or security. The user is fully responsible for his products and applications using LEMO components.