www.lemo.com

FVG.3W.93B.CLAT91Z

SUMMARY

Wires

Fiber optic	**2**



Image is for illustrative purpose only

Series	3W
Termination type	Hybrid contacts
IP rating	68
AWG wire size	0.00 - 0.00
Cable Ø	0.00 - 0.00 mm
Status	active
Matching parts	EVG.3W.93B.CLL

Download

Request a quote

Catalog

TECHNICAL DETAILS

Mechanics

Shell Style/Model	FV_/Z*: Straight plug, cable collet and nut for fitting a bend relief
Keying	1 key (alpha=0; Plug: male contacts; Receptacle: female contacts)
Housing Material	Brass (chrome plated [SAE AMS 2460]) shell and collet nut, nickel plated [SAE AMS QQ N 290] brass latch sleeve and mid pieces
Variant	Z : Nut for fitting a bend relief
Weight	96.20 g

Performance

Configuration

Insulator

Rated Current

Specifications

Contact Type: Solder

Others

Endurance (Shell): 1000 mating cycles
Temp (min / max): -20°C / +200°C
Humidity (max): <=95% [at 60 deg C /140 F]

LEMO products and services are provided “as is”. LEMO makes no warranties or representations with regard to LEMO product & services or use of them, express, implied or statutory, including for accuracy, completeness, or security. The user is fully responsible for his products and applications using LEMO components.

Climatical Category: 20/200/21
Shielding (min): 95 dB (10 MHz)
Shielding (min): 80 dB (1 GHz)
Salt Spray Corrosion: >1000 hr
Pressure: 30 bars

DRAWINGS

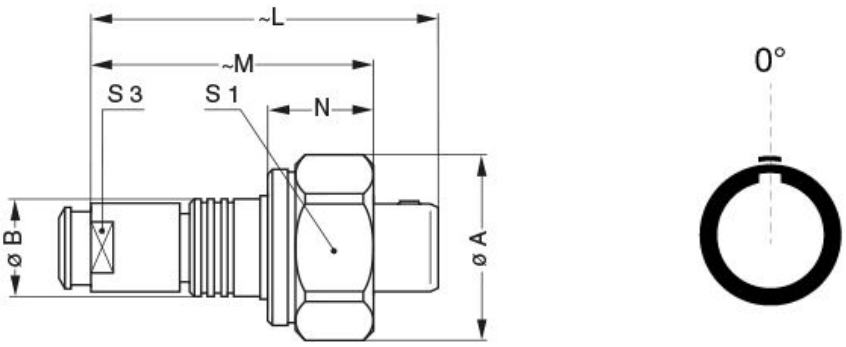

Dimensions

	A	B	L	M	N	S1	S3
mm.	27.8	17	60.5	46.9	16.5	26	15
in.	1,09	0,67	2,38	1,85	0,65	1,02	0,59

RECOMMENDED BY LEMO

Tools

LEMO products and services are provided “as is”. LEMO makes no warranties or representations with regard to LEMO product & services or use of them, express, implied or statutory, including for accuracy, completeness, or security. The user is fully responsible for his products and applications using LEMO components.