www.lemo.com

HVP.03.250.CLLPV

SUMMARY

Wires

Coax	**1**



Image is for illustrative purpose only

Series	03
Termination type	Female solder
IP rating	68
AWG wire size	0.00 - 0.00
Cable Ø	0.00 - 0.00 mm
Status	active

Download

Request a quote

Catalog

TECHNICAL DETAILS

Mechanics

Shell Style/Model	HVP.03*: Fixed receptacle, round flange, nut fixing, vacuumtight
Keying	
Housing Material	Brass (chrome plated [SAE AMS 2460]) shell and collet nut, nickel plated [SAE AMS QQ N 290] brass latch sleeve and mid pieces
Variant	PV : Watertight / Vacuum-tested
Weight	4.32 g

Performance

Configuration	03.250 : 1 Coax (50 Ohm)
Insulator	
Rated Current	

Specifications

Contact Type: Solder

Others

Temp (min / max): -20°C / +100°C
Humidity (max): <=95% [at 60 deg C /140 F]

LEMO products and services are provided “as is”. LEMO makes no warranties or representations with regard to LEMO product & services or use of them, express, implied or statutory, including for accuracy, completeness, or security. The user is fully responsible for his products and applications using LEMO components.

Climatical Category: 20/200/21
Shielding (min): 100 dB (10 MHz)
Shielding (min): 80 dB (1 GHz)
R leak (He) (max): 0.0000001 mbar*l/s (if vacuum-tested)
Salt Spray Corrosion: >1000 hr
Pressure: 60 bars (120 bars with LEMO cable assembly)

DRAWINGS

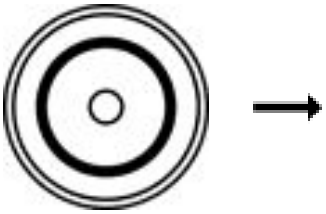

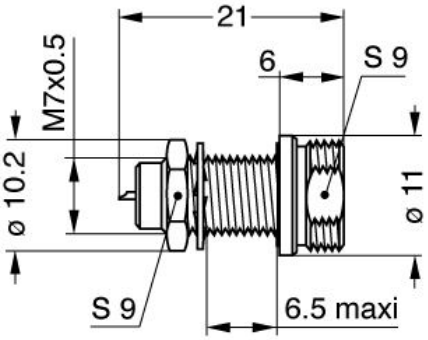



Dimensions

	A	B	E	L	M	S1	S2	e
mm.	11	10.2	6.5	21	6	9	9	M7x0.5
in.	0,43	0,40	0,26	0,83	0,24	0,35	0,35	

RECOMMENDED BY LEMO

Tools

LEMO products and services are provided "as is". LEMO makes no warranties or representations with regard to LEMO product & services or use of them, express, implied or statutory, including for accuracy, completeness, or security. The user is fully responsible for his products and applications using LEMO components.