www.lemo.com

SWH.00.250.CTMV

SUMMARY

Wires

Coax	1



Image is for illustrative purpose only

Series	00
Termination type	Coupler/adapter/bridge
IP rating	50
AWG wire size	0.00 - 0.00
Cable Ø	0.00 - 0.00 mm
Status	active

Download

Request a quote

Catalog

TECHNICAL DETAILS

Mechanics

Shell Style/Model	SWH*: Fixed coupler, nut fixing, watertight or vacuum-tight
Keying	Circular, flange side: female contacts, other side: female contacts
Housing Material	Brass (chrome plated [SAE AMS 2460]) shell and collet nut, nickel plated [SAE AMS QQ N 290] brass latch sleeve and mid pieces
Weight	4.61 g

Performance

Configuration	00.250 : 1 Coax (50 Ohm)
Insulator	T: PTFE
Rated Current	4 Amps

Specifications

Contact Type: Coaxial 50 Ohm
Contact Retention: 18 N
Contact Dia.: 0.7 mm (0.03in)
Vtest: 2100 V (AC), 3000 V (DC)

Impedance: 50 Ohm
VSWR: 1.09 + 0.11 * f/GHz

LEMO products and services are provided “as is”. LEMO makes no warranties or representations with regard to LEMO product & services or use of them, express, implied or statutory, including for accuracy, completeness, or security. The user is fully responsible for his products and applications using LEMO components.

Others

Endurance (Shell): 5000 mating cycles
Temp (min / max): -20°C / +100°C
F ret (min): 100 N
Salt Spray Corrosion: >1000 hr

DRAWINGS

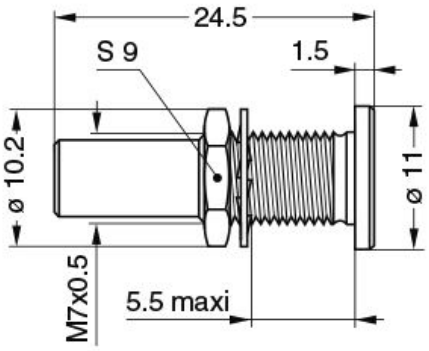

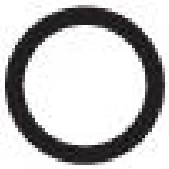

Dimensions

	A	B	C	D	E	S1	e
mm.	24.5	11.0	10.2	1.5	5.5	9	M7x0.5
in.	0,96	0,43	0,40	0,06	0,22	0,35	

RECOMMENDED BY LEMO

Tools

Crimp Tool: DPC.91.701.V

LEMO products and services are provided "as is". LEMO makes no warranties or representations with regard to LEMO product & services or use of them, express, implied or statutory, including for accuracy, completeness, or security. The user is fully responsible for his products and applications using LEMO components.