REVISION

E	DB	D BERNARDI
3/10/2009	ECN-106837	

ADD 04, 05, 06, AND 07 VERSION. UPDATE NOTE #8 TO SAY "FOR SUB-ASSEMBLY AND FINISHED GOOD PACKAGING REQUIREMENTS, REFERENCE PACKAGING STANDARD CO-HD-WI-3033-M."

F	DZ	E FRALEY
11/4/2009	ECN-119627	

SHT 2, SUB-HDR-131992-02 BOM, ITEM 3: CHG FROM PT-1-24-03-29 TO PT-1-24-02-143.

G	AC	D BERNARDI
12/2/2009	ECN-121057	

ADD HOUSING WIDTH DIM ON SHT 1

H	AC	D BERNARDI
4/14/2010	ECN-129278	

SHT 1, TABLE 2: ADD -09 LENGTH OPTION.

J	CC	N Escobedo
6/4/2012	ECN-179060	

TABLE 2: ADD CONFIGURATION -10 (02.00IN); NOTES: UPDATE NOTES TO STANDARD; SHT 2: ADD TABLE 3 (NET LIST); ADD CPC CRITICAL INSPECTION CHART

K	CC	M Rodriguez
10/28/2016	ECN-288027	

ADD -17 CONFIG

HDR SETUP OPTION:
HQDP-3 BANK
PCB SETUP OPTION:
OPTION 4

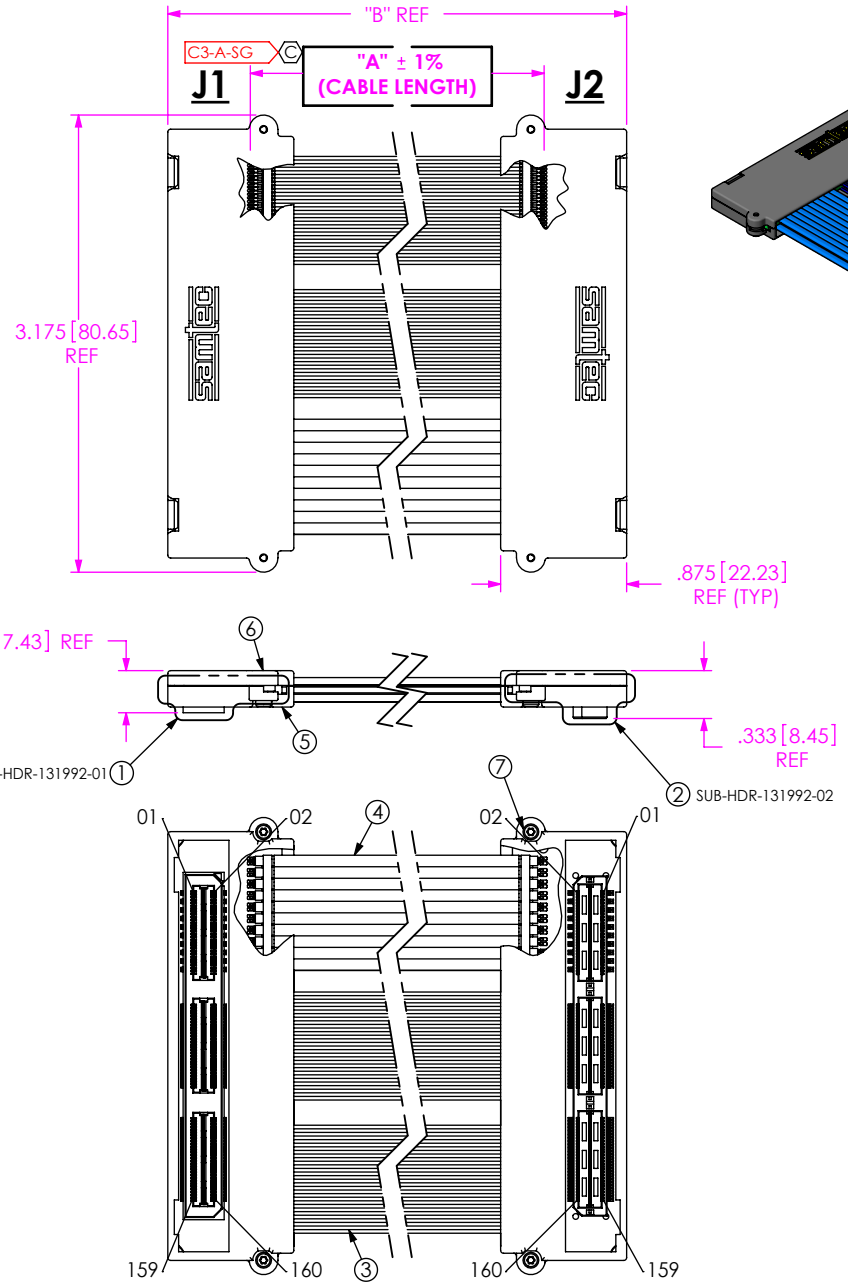

THIS PRODUCT MANUFACTURED WITH LEAD-FREE PROCESSING

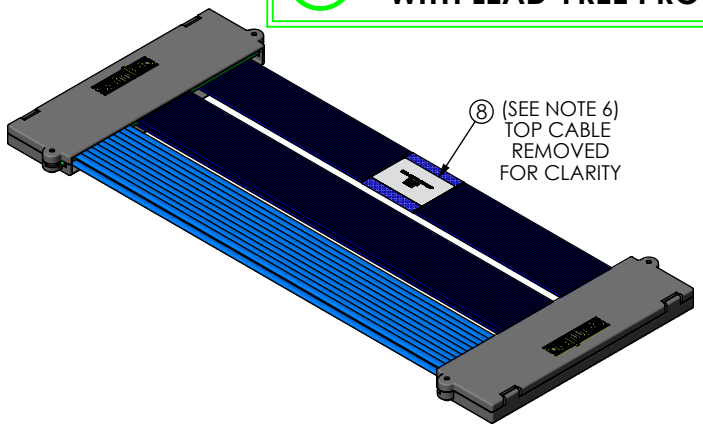

K	TABLE 2		
	PART #	"A"	"B"
	HDR-131992-01-HQDP	6.00 [152.4]	7.15 [181.5]
	HDR-131992-02-HQDP	12.00 [304.8]	13.15 [333.9]
	HDR-131992-03-HQDP	18.00 [457.2]	19.15 [486.3]
	HDR-131992-04-HQDP	3.75 [95.3]	4.90 [124.4]
	HDR-131992-05-HQDP	24.00 [609.6]	25.15 [638.7]
	HDR-131992-06-HQDP	30.00 [762.0]	31.15 [791.1]
	HDR-131992-07-HQDP	78.74 [2,000.0]	79.89 [2,029.1]
	HDR-131992-08-HQDP	9.00 [228.6]	10.15 [257.7]
	HDR-131992-09-HQDP	5.00 [127.0]	6.15 [156.1]
	HDR-131992-10-HQDP	2.00 [50.8]	3.15 [79.9]
	HDR-131992-17-HQDP	39.37 [1,000.0]	40.52 [1,029.1]

NOTES:

1. **CABLE CONFIGURATION IS NOT STANDARD.**
   LIKE PART #: HQDP-060-XX.XX-SBR-TBL-1
2. Ⓒ REPRESENTS A CRITICAL DIMENSION.
3. PARTS TO BE PROCESSED PER SAMTEC BOUNDARY DOCUMENT GUIDELINES.
4. ALL ASSEMBLIES TO BE 100% ELECTRICALLY TESTED. (C1-D-ET, C2-D-ET)
5. ALL ASSEMBLIES TO BE 100% HI-POT TESTED AT 300V.
6. ITEM 8 TO BE CENTERED ON ITEM 3 AS SHOWN. ITEM 8 TO CONTAIN:
   LINE 1 - PART NUMBER "HDR-XXXXX-XX",
   LINE 2 - SHOP ORDER NUMBER "XXXXXX",
   LINE 3 - DATE CODE "XXXXX".
   NUMERIC REVISION PRODUCT WILL HAVE ADDITIONAL LABEL INDICATING "RELEASE FOR LIMITED PRODUCTION".
7. FOR PROCESSING INFORMATION ON SUB-ASSEMBLIES, REFERENCE SUB-HDR-131992-XX TRAVELER.XLS.
8. FOR SUB-ASSEMBLY AND FINISHED GOOD PACKAGING REQUIREMENTS, REFERENCE PACKAGING STANDARD CO-HD-WI-3033-M.
9. TIGHTEN STS-01 FASTENERS TO 1.4-1.7 IN-LBS (4 PLCS).
10. PANEL PCB-100841-HDR-XX YIELDS (10) PCB-100841-HDR-01 BOARDS.
    PANEL PCB-100842-HDR-XX YIELDS (10) PCB-100841-HDR-02 BOARDS.

BY SIGNING THIS DOCUMENT YOU ARE ACCEPTING THE CONDITIONS SET WITHIN. YOUR REQUIREMENTS MUST BE LISTED WITHIN THIS DRAWING. WHERE NO DIRECTION FROM THE CUSTOMER IS IDENTIFIED SAMTEC'S PROCESS REQUIREMENTS WILL BE USED.

DATE: _____ COMPANY: _____ CUSTOMER SIGNATURE: _____ PRINTED NAME: _____ PHONE NO: _____ EXCEPTIONS: _____

HDR-131992-XX-HQDP BOM				
ITEM NO.	PART NUMBER	DESCRIPTION	QUANTITY	MATERIAL
1	SUB-HDR-131992-01	SUB ASSEMBLY	1	SUB ASSEMBLY
2	SUB-HDR-131992-02	SUB ASSEMBLY	1	SUB ASSEMBLY
3	SUB-TCF-3850-30-01-XX.XX	COAX CABLE	4	SUB ASSEMBLY
4	SUB-TTF-30100-10-01-XX.XX	TWIN-AX CABLE	2	SUB ASSEMBLY
5	HQDP-03-01	HOUSING	2	IDEMITSU XAREC EA 522 BK, COLOR: BLACK
6	HQDP-03-02	HOUSING	2	IDEMITSU XAREC EA 522 BK, COLOR: BLACK
7	STS-01	FASTENER	4	LOW CARBON STEEL
8	HDRL-11	LABEL	1	SELF LAMINATING VINYL

F:\dwg\hdr\131000\hdr-131992-xx-hqdp\HDR-131992-XX-HQDP.SLDDRW

TOLERANCES DO NOT APPLY TO REFERENCE DIMENSIONS.
UNLESS OTHERWISE SPECIFIED, DIMENSIONS ARE IN INCHES.
TOLERANCES ARE:
DECIMALS: .XX: ±.01[.3] .XXX: ±.005[.13] .XXXX: ±.0020[.051]
ANGLES: 2°

PROPRIETARY NOTE
THIS DOCUMENT CONTAINS CONFIDENTIAL AND PROPRIETARY INFORMATION AND ALL DESIGN, MANUFACTURING, REPRODUCTION, USE, PATENT RIGHTS AND SALES RIGHTS ARE EXPRESSLY RESERVED BY SAMTEC, INC. THIS DOCUMENT SHALL NOT BE DISCLOSED, IN WHOLE OR PART, TO ANY UNAUTHORIZED PERSON OR ENTITY NOR REPRODUCED, TRANSFERRED OR INCORPORATED IN ANY OTHER PROJECT IN ANY MANNER WITHOUT THE EXPRESS WRITTEN CONSENT OF SAMTEC, INC.

DO NOT SCALE DRAWING SHEET SCALE: 3:4

samtec
520 PARK EAST BLVD, NEW ALBANY, IN 47150
PHONE: 812-944-6733 FAX: 812-948-5047
e-Mail: info@SAMTEC.com code: 55322

DESCRIPTION: CUSTOM HDR CABLE ASSEMBLY

DWG. NO. HDR-131992-XX-HQDP

BY: J. BORGELT 04/06/2007 SHEET 1 OF 2

REVISION K

THIS PRODUCT MANUFACTURED WITH LEAD-FREE PROCESSING

SUB SETUP OPTION: HDR-SUB-02

J1
SUB-HDR-131992-01

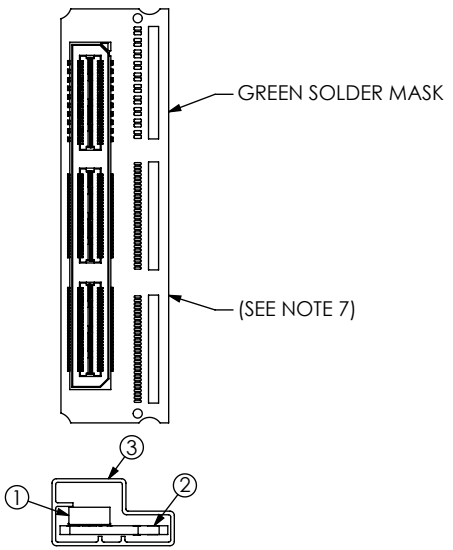

SUB-HDR-131992-01 BOM			
ITEM NO.	PART NUMBER	QUANTITY	MATERIAL
1	ASP-122953-01	1	SOCKET
2	PCB-100842-HDR-01	1	PCB
3	PT-1-24-03-29	.12500	TUBE
4	TP-07	.25000	PLUG

THIS PRODUCT MANUFACTURED WITH LEAD-FREE PROCESSING

SUB SETUP OPTION: HDR-SUB-02

J2
SUB-HDR-131992-02

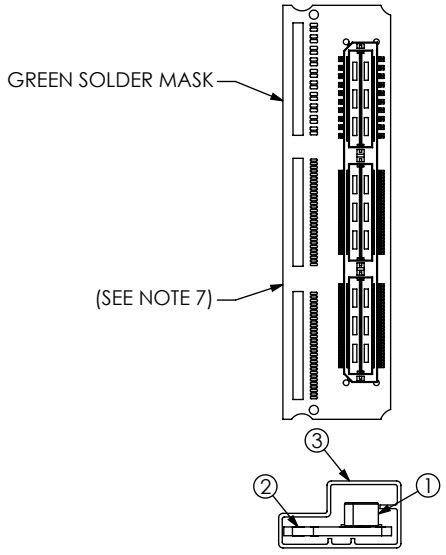

SUB-HDR-131992-02 BOM			
ITEM NO.	PART NUMBER	QUANTITY	MATERIAL
1	ASP-122952-01	1	TERMINAL
2	PCB-100841-HDR-01	1	PCB
3	PT-1-24-03-29	0.12500	TUBE
4	TP-07	0.25000	PLUG

TABLE 1
SIGNAL MAPPING

J1	SIG	J2	J1	SIG	J2	J1	SIG	J2
1	SIG	1	55	SIG	55	109	SIG	109
2	SIG	2	56	SIG	56	110	SIG	110
3	SIG	3	57	SIG	57	111	SIG	111
4	SIG	4	58	SIG	58	112	SIG	112
5	SIG	5	59	SIG	59	113	SIG	113
6	SIG	6	60	SIG	60	114	SIG	114
7	SIG	7	61	SIG	61	115	SIG	115
8	SIG	8	62	SIG	62	116	SIG	116
9	SIG	9	63	SIG	63	117	SIG	117
10	SIG	10	64	SIG	64	118	SIG	118
11	SIG	11	65	SIG	65	119	SIG	119
12	SIG	12	66	SIG	66	120	SIG	120
13	SIG	13	67	SIG	67	121	SIG	121
14	SIG	14	68	SIG	68	122	SIG	122
15	SIG	15	69	SIG	69	123	SIG	123
16	SIG	16	70	SIG	70	124	SIG	124
17	SIG	17	71	SIG	71	125	SIG	125
18	SIG	18	72	SIG	72	126	SIG	126
19	SIG	19	73	SIG	73	127	SIG	127
20	SIG	20	74	SIG	74	128	SIG	128
21	SIG	21	75	SIG	75	129	SIG	129
22	SIG	22	76	SIG	76	130	SIG	130
23	SIG	23	77	SIG	77	131	SIG	131
24	SIG	24	78	SIG	78	132	SIG	132
25	SIG	25	79	SIG	79	133	SIG	133
26	SIG	26	80	SIG	80	134	SIG	134
27	SIG	27	81	SIG	81	135	SIG	135
28	SIG	28	82	SIG	82	136	SIG	136
29	SIG	29	83	SIG	83	137	SIG	137
30	SIG	30	84	SIG	84	138	SIG	138
31	SIG	31	85	SIG	85	139	SIG	139
32	SIG	32	86	SIG	86	140	SIG	140
33	SIG	33	87	SIG	87	141	SIG	141
34	SIG	34	88	SIG	88	142	SIG	142
35	SIG	35	89	SIG	89	143	SIG	143
36	SIG	36	90	SIG	90	144	SIG	144
37	SIG	37	91	SIG	91	145	SIG	145
38	SIG	38	92	SIG	92	146	SIG	146
39	SIG	39	93	SIG	93	147	SIG	147
40	SIG	40	94	SIG	94	148	SIG	148
41	SIG	41	95	SIG	95	149	SIG	149
42	SIG	42	96	SIG	96	150	SIG	150
43	SIG	43	97	SIG	97	151	SIG	151
44	SIG	44	98	SIG	98	152	SIG	152
45	SIG	45	99	SIG	99	153	SIG	153
46	SIG	46	100	SIG	100	154	SIG	154
47	SIG	47	101	SIG	101	155	SIG	155
48	SIG	48	102	SIG	102	156	SIG	156
49	SIG	49	103	SIG	103	157	SIG	157
50	SIG	50	104	SIG	104	158	SIG	158
51	SIG	51	105	SIG	105	159	SIG	159
52	SIG	52	106	SIG	106	160	SIG	160
53	SIG	53	107	SIG	107			
54	SIG	54	108	SIG	108			

TABLE 3
NET LIST

TYPE	NETS	POINTS
POINT TO POINT	163	326

CRITICAL DIMENSION INSPECTION INSTRUCTION TABLE	
ASSEMBLY OPERATION	IN-PROCESS INSPECTION
PREP CABLE	C3
E-TEST	C1, C2

F:\dwg\hdr\131000\hdr-131992-xx-hqdp\HDR-131992-XX-HQDP.SLDDRW

PROPRIETARY NOTE

THIS DOCUMENT CONTAINS CONFIDENTIAL AND PROPRIETARY INFORMATION AND ALL DESIGN, MANUFACTURING, REPRODUCTION, USE, PATENT RIGHTS AND SALES RIGHTS ARE EXPRESSLY RESERVED BY SAMTEC, INC. THIS DOCUMENT SHALL NOT BE DISCLOSED, IN WHOLE OR PART, TO ANY UNAUTHORIZED PERSON OR ENTITY NOR REPRODUCED, TRANSFERRED OR INCORPORATED IN ANY OTHER PROJECT IN ANY MANNER WITHOUT THE EXPRESS WRITTEN CONSENT OF SAMTEC, INC.

SHEET SCALE: 3:4

samtec
520 PARK EAST BLVD, NEW ALBANY, IN 47150
PHONE: 812-944-6733 FAX: 812-948-5047
e-Mail: info@SAMTEC.com code: 55322

DESCRIPTION: CUSTOM HDR CABLE ASSEMBLY

DWG. NO. HDR-131992-XX-HQDP

BY: J. BORGELT 04/06/2007 SHEET 2 OF 2