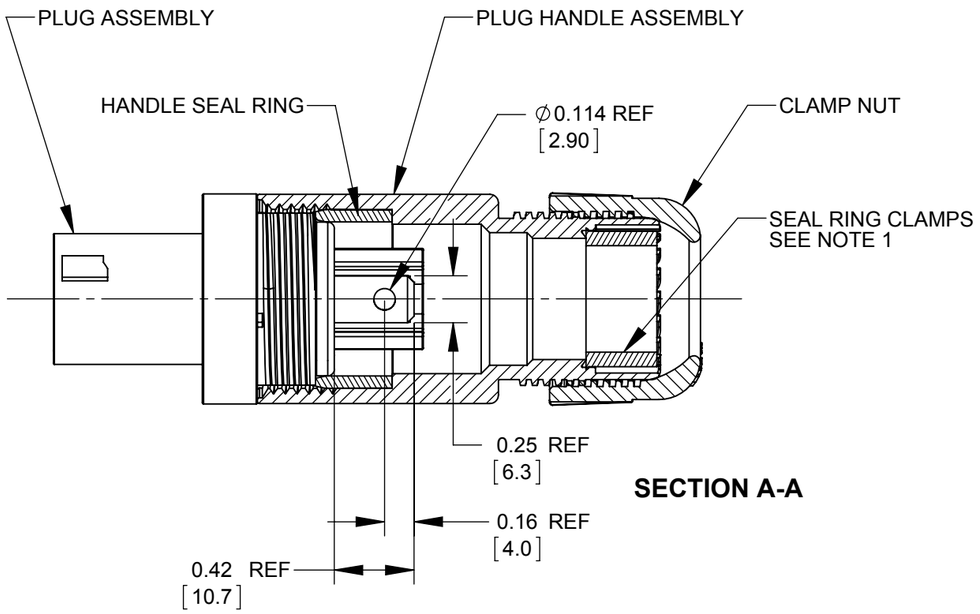

SECTION A-A

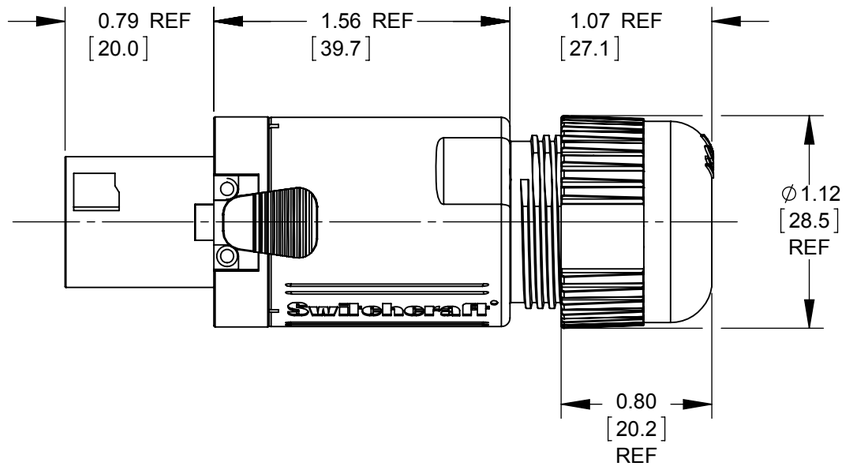

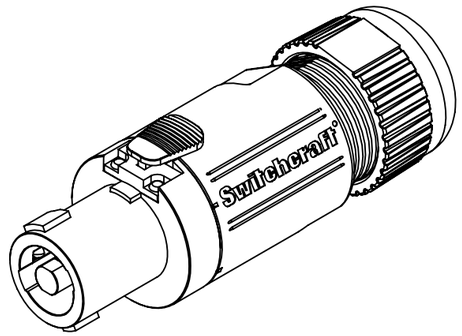

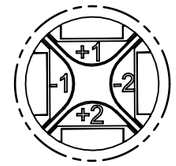

DETAIL B
PIN LOCATIONS
REAR VIEW OF PLUG
SCALE 2 : 1

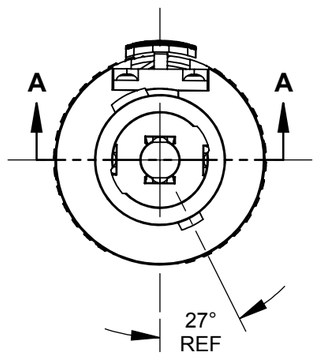

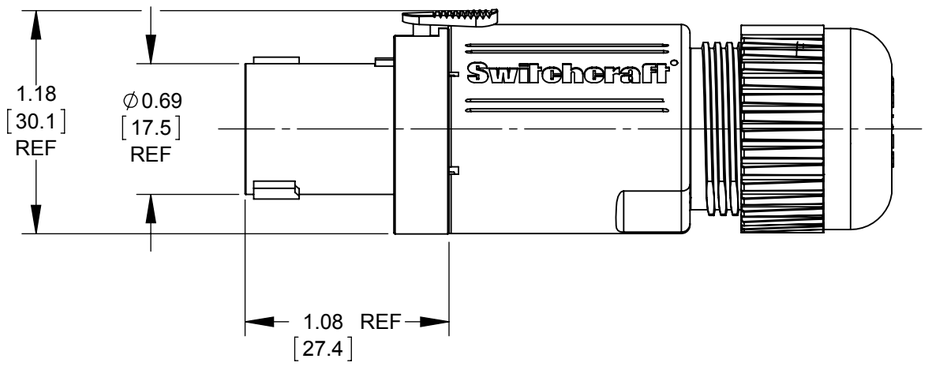

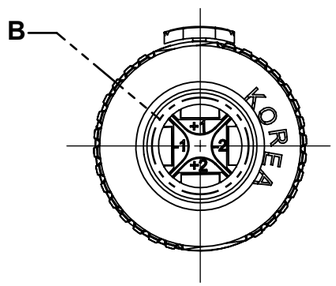

CUSTOMER DRAWING

NOTES:

1. SEAL CLAMPS ARE SHIPPED UNASSEMBLED.
   ONE WITH 0.396 ID AND OTHER WITH 0.562 ID.

2. CLAMP NUT IS SHIPPED UNASSEMBLED.

3. MATERIALS:
   PLUG HANDLE, PLUG HOUSING, AND LATCH COVER: BLACK THERMOPLASTIC
   CLAMP NUT: GREY THERMOPLASTIC
   CONTACT PINS: SILVER PLATED COPPER ALLOY
   LATCH RELEASE: NICKEL PLATED ZINC ALLOY
   LATCH SPRING: STAINLESS STEEL
   HANDLE SEAL RING AND SEAL RING CLAMPS: BLACK THERMOPLASTIC ELASTOMER

4. THESE PARTS ARE RoHS COMPLIANT.

REV	ECO NUMBER	DATE	BY	APVD
A	27719	6-22-16	SRC	TJK

REVISIONS

UNLESS OTHERWISE SPECIFIED

1. ALL DIMENSIONS IN INCHES [mm]
   - TWO PLACE DECIMALS ±0.02 [0.5]
   - THREE PLACE DECIMALS ±0.005 [0.13]

DO NOT SCALE DRAWING

THIS DRAWING DESCRIBES A DESIGN CONSIDERED PROPRIETARY IN NATURE, DEVELOPED AND MANUFACTURED BY SWITCHCRAFT INC. AND IS RELEASED ON A CONFIDENTIAL BASIS FOR IDENTIFICATION PURPOSES ONLY.

SIZE	WIDTH	MULT	LBS/M	TEMPER

FINISH
SPEC No.

MATERIAL
SPEC No.

FIRST USED ON

SCALE 1.25:1

DATE DRAWN	BY	CHKD	APVD
10-27-15	SRC	SRC 10-27-15	SRC 6-8-16

Switchcraft®

SHEET 1 OF 1

NAME TWIST LOCK HIGH POWER CONNECTOR

PART No. HPCC4FT

REV A

SolidWorks CAD File B