MATERIALS AND FINISHES:

BODY: BRASS
PLATED GOLD

CENTER CONTACT: BERYLLIUM COPPER
PLATED GOLD

INSULATOR: TEFLON

PACKAGING: SEE TABLE

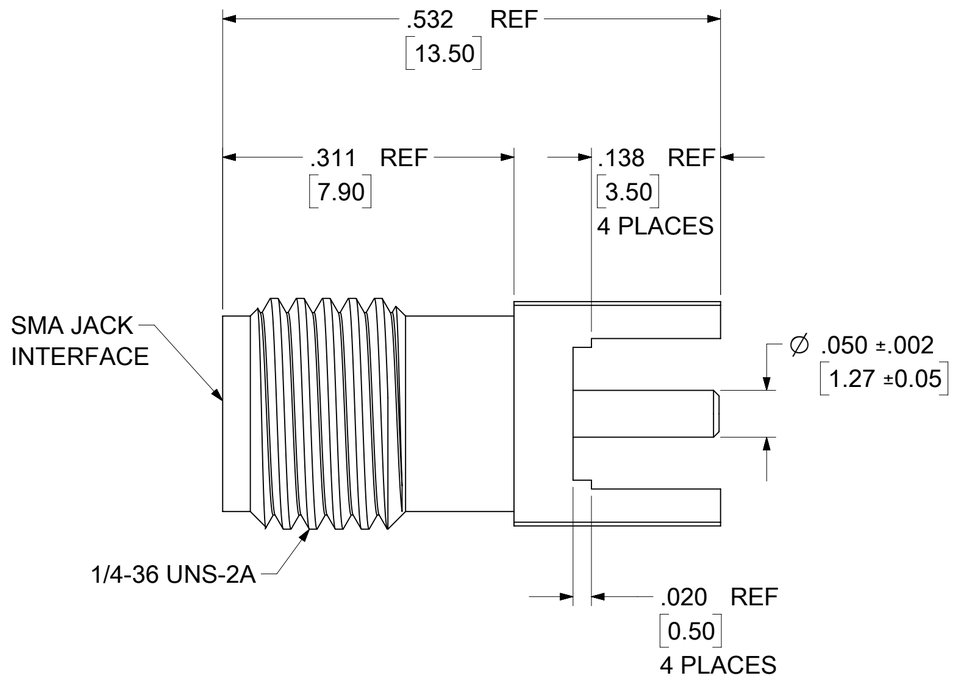

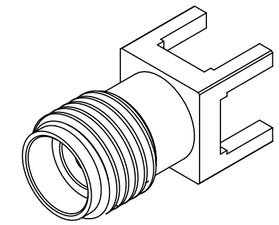

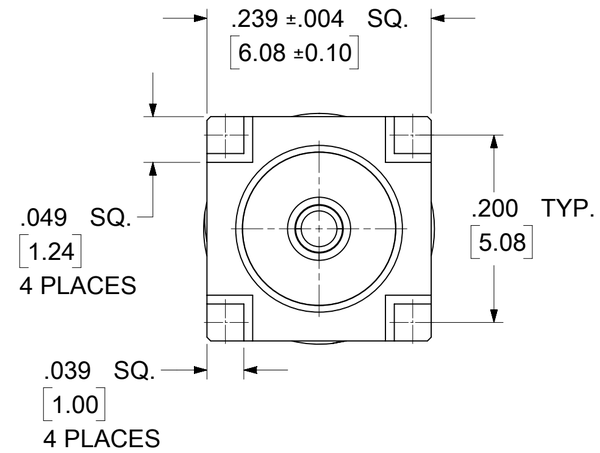

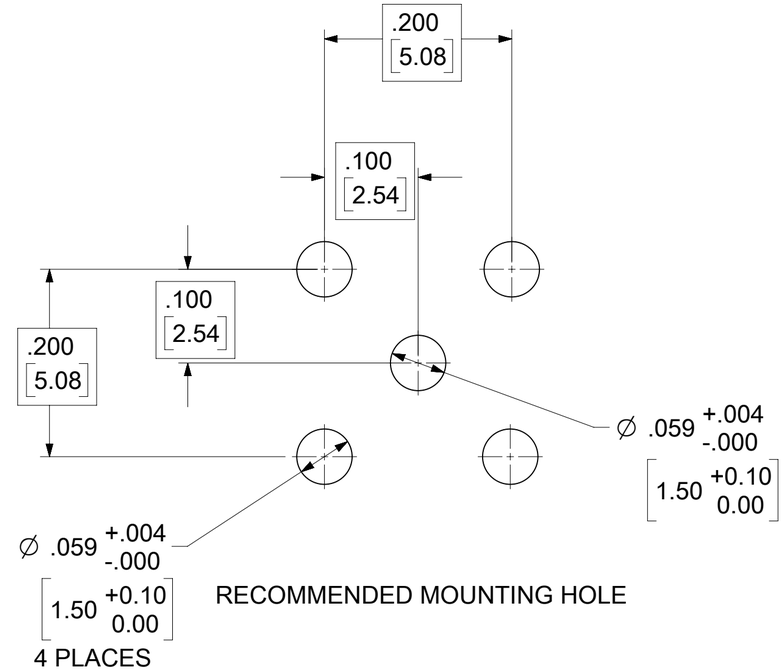

RECOMMENDED MOUNTING HOLE

PS-89675-346	ELECTRO/MECH. PERFORM.
SPECIFICATION	DESCRIPTION

73391-0072	73391-0070 BY TRAY (20 CAV.)
73391-0071	ONE PIECE 73391-0070 PER BAG
73391-0070	TRAY (80 CAV.)
PART NO.	PACKAGING

THIS DRAWING CONTAINS INFORMATION THAT IS PROPRIETARY TO MOLEX ELECTRONIC TECHNOLOGIES, LLC AND SHOULD NOT BE USED WITHOUT WRITTEN PERMISSION

FUNCTIONAL SYMBOLS: FA = 0, FC = 0, FP = 0

DIVISIONAL SYMBOLS

DIMENSION UNITS	SCALE
INCH	NTS

GENERAL TOLERANCES (UNLESS SPECIFIED)

ANGULAR TOL	± 2.0 °
4 PLACES	±
3 PLACES	±
2 PLACES	±
1 PLACE	±
0 PLACES	±

DRAFT WHERE APPLICABLE MUST REMAIN WITHIN DIMENSIONS

CURRENT REV DESC: CORRECT THREAD DIRECTION PER EWR14622-A

EC NO: 670034
DRWN: CWEI02 2021/06/18
CHK'D: YCHENG 2021/07/20
APPR: YCHENG 2021/07/20

INITIAL REVISION:
DRWN: LYNN 1998/10/19
APPR: XXXX XXXX

molex

SMA JACK VERTICAL PCB
50 OHMS SMA-J/PCB

PRODUCT CUSTOMER DRAWING

DOCUMENT NUMBER	DOC TYPE	DOC PART	REVISION
SD-73391-007	PSD	001	B5

THIRD ANGLE PROJECTION	DRAWING	SERIES	MATERIAL NUMBER	CUSTOMER	SHEET NUMBER
	C-SIZE	73391	SEE TABLE	GENERAL MARKET	1 OF 1

DOCUMENT STATUS	P1	RELEASE DATE	2021/07/20 09:28:32

FORMAT: master-tb-prod-C
REVISION: J
DATE: 2020/01/14