THIS DOCUMENT IS THE PROPERTY OF KEYSTONE ELECTRONICS CORP. AND SHALL NOT BE REPRODUCED, DISTRIBUTED OR USED AS A BASIS FOR MANUFACTURE WITHOUT PRIOR WRITTEN PERMISSION FROM KEYSTONE ELECTRONICS CORP.

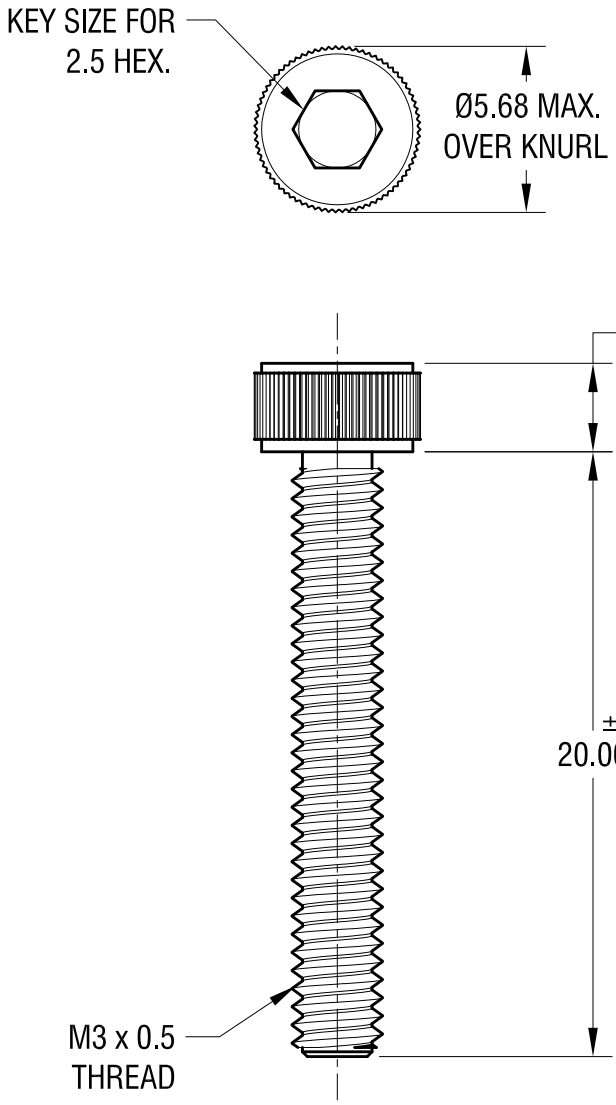

NOTE:
1. ALL DIMENSIONS ARE IN MILLIMETERS

DATE	DESCRIPTION	REV.

KEYSTONE ELECTRONICS CORP.
www.keyelco.com ● NEW HYDE PARK, NY 11040 ● Tel (516) 328-7500

PART NAME: SOCKET HEAD SCREW			
MATERIAL: TITANIUM, GRADE 2			
FINISH: NONE	DRN BY: NT	DATE: 10.31.19	
	APP'D: RH	SCALE: 4X	
TOLERANCES INCH [MM] DECIMAL ± [± 0.13] ANGULAR ± 1° UNLESS OTHERWISE SPECIFIED	CODE: C	DWG NO.: 25033	