THIS COPY IS PROVIDED ON A RESTRICTED BASIS AND IS NOT TO BE USED IN ANY WAY DETRIMENTAL TO THE INTERESTS OF PANDUIT CORP.

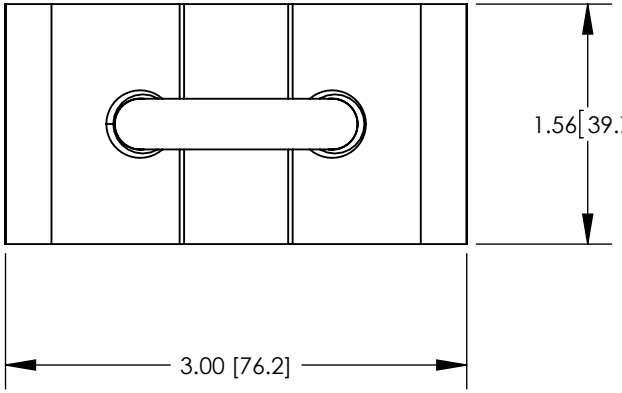

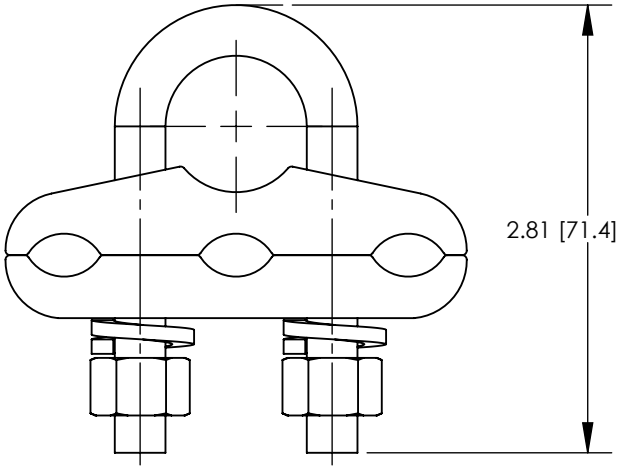

NOTES:

1. MATERIAL:
   BODY: BRONZE (GUN METAL)
   NUT/WASHER: PHOS. BRONZE
2. PARTS ARE cULus LISTED TO UL467 AS GROUNDING & BONDING EQUIPMENT
3. RATED FOR DIRECT BURIAL
4. DIMENSIONS IN PARENTHESIS ARE MILLIMETERS.
5. PACKAGING QTY:
   X = 10

C UL US

DB RATED

PART NUMBER	DESCRIPTION	WIRE RANGE	PIPE SIZE	ROD SIZE
GPC3250-38-X	GROUND CLAMP CONNECTOR	2/0 SOL - 250 kcmil	3/8"	5/8" - 3/4"

REV	DATE	BY	CHK	APR	DESCRIPTION	ECN
00	9/13	JHNU	SRBI	RGB	DRAWING RELEASED	13J051AA-JC

TITLE: GROUND CLAMP (GPC3250-38-X) CUSTOMER DRAWING

ITEM REVISION NAME: 13J051AA/00

DATASET FILE NAME: 13J051AA-JC/00.SLDDRW

UNLESS OTHERWISE SPECIFIED, DIMENSIONAL TOLERANCES ARE: IN [mm]
.X ± .XXX ±
.XX ± .2 [5.2] ANGLES ±

THIRD ANGLE PROJECTION

MATERIAL: SEE NOTES

DRAWING NUMBER: 13J051AA-JC

DRAWN BY	DATE	CHK	SCALE	SHEET	SIZE
JHNU	9/13	SRBI	NONE	SHEET 1 0F 1	A