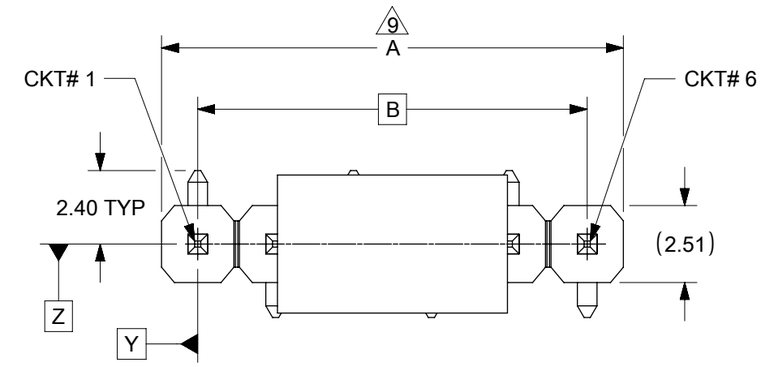

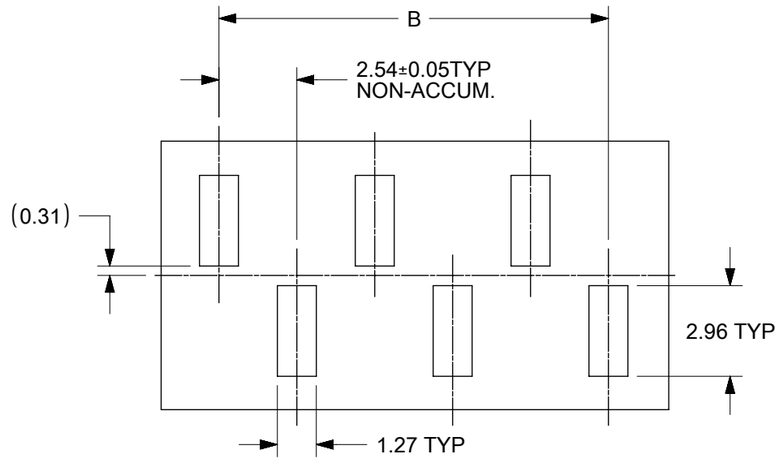

RECOMMENDED PCB LAYOUT

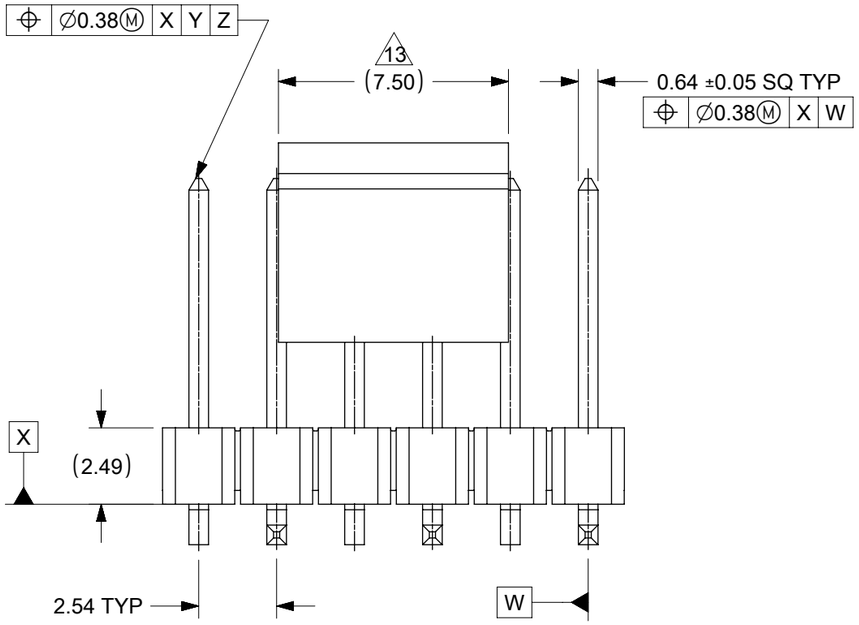

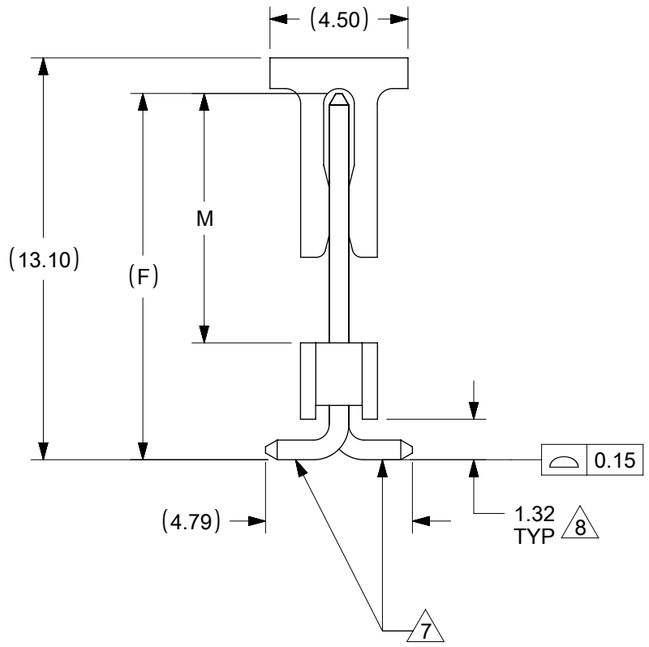

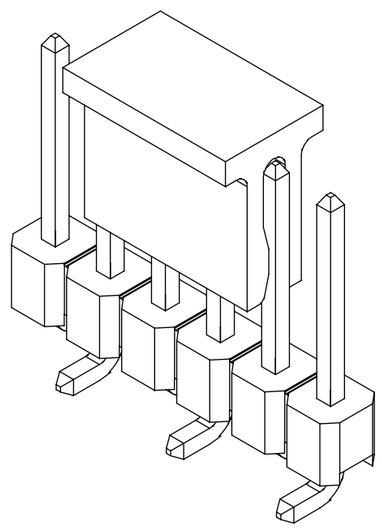

NOTES:

1. MATERIAL:
   HSG: NYLON, GLASS-FILLED, UL94V-0, COLOR: BLACK
   PIN: 0.64MM SQ, COPPER ALLOY
2. PLATING TYPE:
   (1) GOLD FLASH OVER
   1.25µm MIN. NICKEL OVERALL.
   (2) GOLD FLASH ON CONTACT AND
   2.50µm MIN. TIN ON SOLDERTAIL OVER
   1.25µm MIN. NICKEL OVERALL.
   (4) 0.38µm MIN. GOLD PLATE ON CONTACT AND
   2.00µm MIN. TIN ON SOLDERTAIL OVER
   1.25µm MIN. NICKEL OVERALL.
   (5) 0.75µm MIN. GOLD PLATE ON CONTACT AND
   2.00µm MIN. TIN ON SOLDERTAIL OVER
   1.25µm MIN. NICKEL OVERALL.
   (6) 2.50µm MIN. TIN OVERALL
   1.25µm MIN. NICKEL OVERALL
3. PRODUCT SPECIFICATION: PS-87920-019
4. PACKAGING TYPE: SEE TABLE
5. PACKAGING SPEC: PK-89990-545(TUBE), PK-89990-486(T&R) & PK-87898-400 (T&R)
6. WAFER TO BE FLAT WITHIN 0.003 mm/mm
7. BEND DEPRESSION IS ACCEPTED SO LONG AS IT DOES NOT AFFECT THE OVERALL COPLANARITY OF TAIL
8. COPLANARITY IS TO BE MEASURED BY RESTING THE SOLDER TAIL ON A FLAT SURFACE
9. IRREGULAR CIRCUIT CUTOFF WITHIN BREAKAWAY SECTION IS PERMISSIBLE.CUTTING OR CHIPPING OF THE MAIN BODY IS NOT ACCEPTABLE
10. TUBE LENGTH AS PER STANDARD 560mm
11. RECOMMENDED PCB THICKNESS IS 1.60mm±0.10
12. THE ABOVE CKT 6 IS FOR ILLUSTRATION PURPOSE ONLY
13. CAP LOCATION IS CENTERED ALONG THE MATING ENDS AS SHOWN. TOP SURFACE OF CAP TO BE FLAT FOR THE PURPOSE OF PICK & PLACE BY VACUUM SUCTION NOZZLE.

THIS DRAWING CONTAINS INFORMATION THAT IS PROPRIETARY TO MOLEX ELECTRONIC TECHNOLOGIES, LLC AND SHOULD NOT BE USED WITHOUT WRITTEN PERMISSION

DIMENSION UNITS	SCALE
mm	NTS

GENERAL TOLERANCES (UNLESS SPECIFIED)

	MM	INCH
4 PLACES	±	±
3 PLACES	±	±
2 PLACES	± 0.2	±
1 PLACE	±	±
0 PLACES	±	±
ANGULAR TOL	± 3.0 °	

DRAFT WHERE APPLICABLE MUST REMAIN WITHIN DIMENSIONS

CURRENT REV DESC:

EC NO: 698212

DRWN:	DANUSA	2022/03/03
CHK'D:	DANUSA	2022/03/04
APPR:	MRAMAKRISHNA	2022/03/04

INITIAL REVISION:

DRWN:	SKLIM01	2005/10/26
APPR:	PTLIM	2005/11/07

THIRD ANGLE PROJECTION | DRAWING: A3-SIZE | SERIES: 87898

molex

CUSTOM HEADER
2.54MM PITCH SINGLE ROW SINGLE WAFER SMT HEADER

PRODUCT CUSTOMER DRAWING

DOCUMENT NUMBER	DOC TYPE	DOC PART	REVISION
SD-87898-003	PSD	001	C1

MATERIAL NUMBER	CUSTOMER	SHEET NUMBER
SEE TABLE	GENERAL MARKET	1 OF 17

DOCUMENT STATUS	P1	RELEASE DATE	2022/03/04 09:00:56

FORMAT: Met-lega-master-tb-prod-A3
REVISION: D
DATE: 2018/01/18

PART WITHOUT CAP
IN TUBE
ORIENTATION

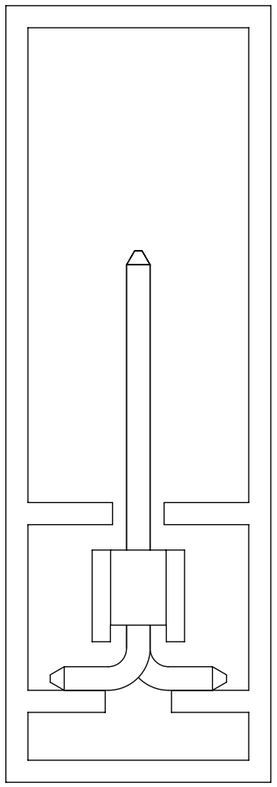

PART WITH CAP
IN TUBE
ORIENTATION

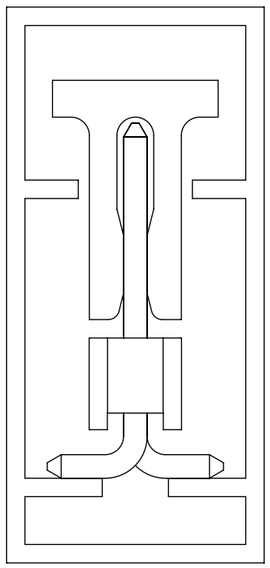

THIS DRAWING CONTAINS INFORMATION THAT IS PROPRIETARY TO MOLEX ELECTRONIC TECHNOLOGIES, LLC AND SHOULD NOT BE USED WITHOUT WRITTEN PERMISSION

DIMENSION UNITS	SCALE
mm	NTS

GENERAL TOLERANCES (UNLESS SPECIFIED)

	MM	INCH
4 PLACES	±	±
3 PLACES	±	±
2 PLACES	± 0.2	±
1 PLACE	±	±
0 PLACES	±	±
ANGULAR TOL	± 3.0 °	

DRAFT WHERE APPLICABLE MUST REMAIN WITHIN DIMENSIONS

CURRENT REV DESC:

EC NO: 698212
DRWN: DANUSA 2022/03/03
CHK'D: DANUSA 2022/03/04
APPR: MRAMAKRISHNA 2022/03/04

INITIAL REVISION:
DRWN: SKLIM01 2005/10/26
APPR: PTLIM 2005/11/07

THIRD ANGLE PROJECTION

DRAWING	SERIES
A3-SIZE	87898

molex

CUSTOM HEADER
2.54MM PITCH SINGLE ROW SINGLE WAFER SMT HEADER

PRODUCT CUSTOMER DRAWING

DOCUMENT NUMBER	DOC TYPE	DOC PART	REVISION
SD-87898-003	PSD	001	C1

MATERIAL NUMBER	CUSTOMER	SHEET NUMBER
SEE TABLE	GENERAL MARKET	2 OF 17

DOCUMENT STATUS	P1	RELEASE DATE	2022/03/04 09:00:56

FORMAT: Met-lega-master-tb-prod-A3
REVISION: D
DATE: 2018/01/18

CKT	DIMENSION						QTY/REEL
	Bo	Ao	Ko	F	So	W	
3	8.02	5.20	13.60	11.50	--	24.00	320
4	10.51	5.79	15.05	14.20	28.40	32.00	250
5	13.10	5.20	13.60	11.50	---	24.00	320

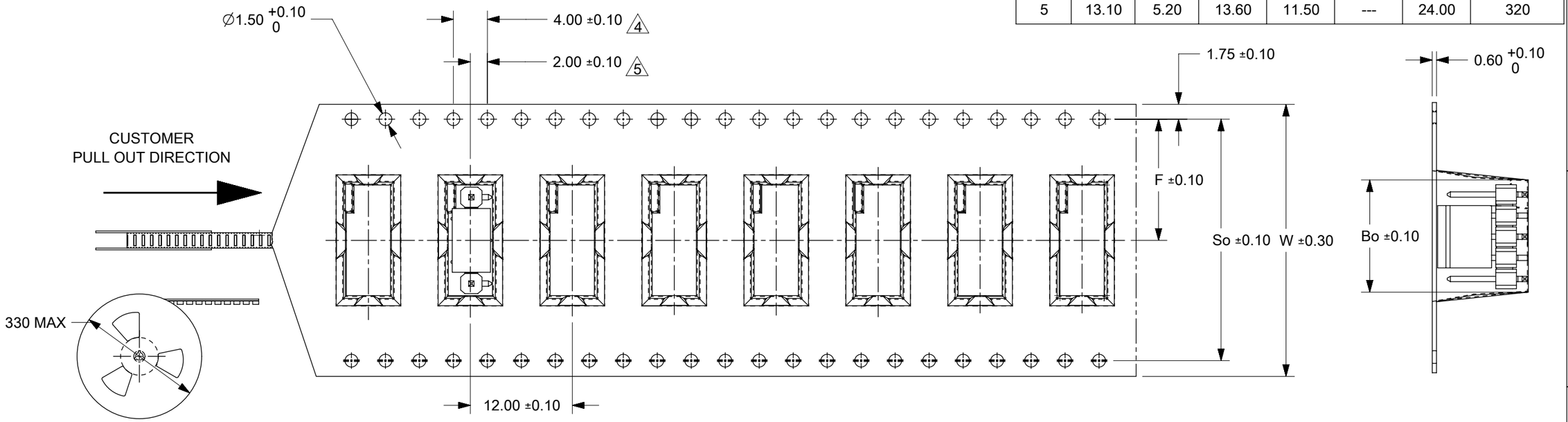

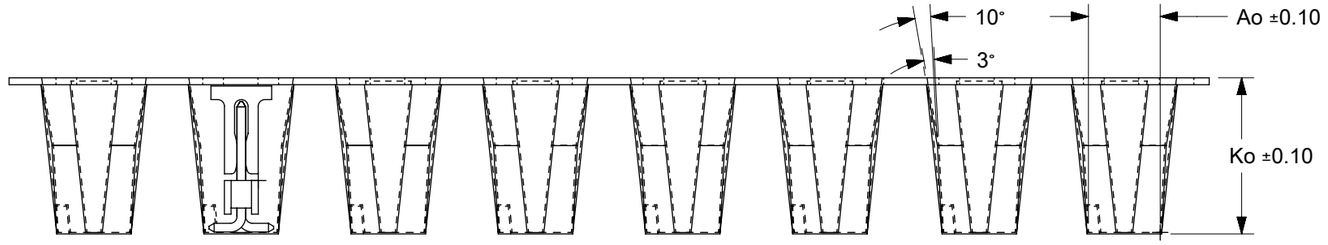

NOTES:

1. LEADER AND TRAILER TAPE

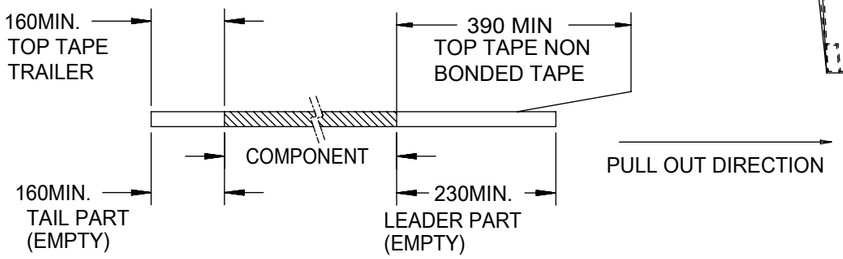

PART PACK
IN E/TAPE
ORIENTATION
(FOR REF USE)

2. PEELING OFF FORCE OF THE TOP TAPE: 20 - 80gf.
(PEELING DIRECTION AS SHOWN IN FOLLOWING FIGURE)

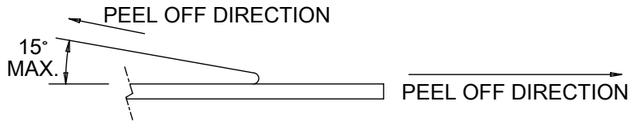

3. MATERIAL: BLACK P.S CONDUCTIVE, BLACK
4. MEASURED FROM CENTRELINE OF SPROCKET HOLE TO CENTRELINE OF POCKET
5. CUMULATIVE TOLERANCE OF 10 SPROCKET HOLE IS ±0.20mm
6. A0 AND B0 ARE MEASURE FROM ABOVE POCKET BASE 0.30mm
7. TAPE AND REEL SPECIFICATION IS AS PER EIA-481.
8. THE TAPE IS TREATED FOR ANTI-STATIC.
9. ALL RADIUS ARE 0.30MM UNLESS SPECIFY
10. SURFACE RESISTIVITY 10^3 TO 10 OHMS.

DOCUMENT STATUS	P1	RELEASE DATE	2022/03/04 09:00:56

THIS DRAWING CONTAINS INFORMATION THAT IS PROPRIETARY TO MOLEX ELECTRONIC TECHNOLOGIES, LLC AND SHOULD NOT BE USED WITHOUT WRITTEN PERMISSION

DIMENSION UNITS	SCALE
mm	NTS

GENERAL TOLERANCES (UNLESS SPECIFIED)

	MM	INCH
4 PLACES	±	±
3 PLACES	±	±
2 PLACES	± 0.2	±
1 PLACE	±	±
0 PLACES	±	±
ANGULAR TOL	± 3.0 °	

DRAFT WHERE APPLICABLE MUST REMAIN WITHIN DIMENSIONS

CURRENT REV DESC:

EC NO: 698212

DRWN:	DANUSA	2022/03/03
CHK'D:	DANUSA	2022/03/04
APPR:	MRAMAKRISHNA	2022/03/04

INITIAL REVISION:

DRWN:	SKLIM01	2005/10/26
APPR:	PTLIM	2005/11/07

THIRD ANGLE PROJECTION | DRAWING: A3-SIZE | SERIES: 87898

molex

CUSTOM HEADER
2.54MM PITCH SINGLE ROW SINGLE WAFER SMT HEADER

PRODUCT CUSTOMER DRAWING

DOCUMENT NUMBER	DOC TYPE	DOC PART	REVISION
SD-87898-003	PSD	001	C1

MATERIAL NUMBER	CUSTOMER	SHEET NUMBER
SEE TABLE	GENERAL MARKET	3 OF 17

FORMAT: Met-lega-master-lib-prod-A3
REVISION: D
DATE: 2018/01/18

PACKAGING OPTION PART NO.						CKT SIZE	VOID POSITION	PLATING TYPE	DIMENSION			
TRAY WITHOUT CAP	TRAY WITH CAP	TUBE WITHOUT CAP	TUBE WITH CAP	TAPE & REEL WITHOUT CAP	TAPE & REEL WITH CAP				A	B	F	M
-------	(C) 87898-0361	-------	-------	-------	-------	3	-----	1	7.62	5.08	11.94	8.13
-------	(C) 87898-0362	-------	-------	-------	-------	3	-----	2	7.62	5.08	11.94	8.13
-------	(C) 87898-0364	-------	-------	-------	87898-0369	3	-----	4	7.62	5.08	11.94	8.13
-------	(C) 87898-0365	-------	-------	-------	-------	3	-----	5	7.62	5.08	11.94	8.13
-------	(C) 87898-0366	-------	87898-0367	-------	87898-0368	3	-----	6	7.62	5.08	11.94	8.13

THIS DRAWING CONTAINS INFORMATION THAT IS PROPRIETARY TO MOLEX ELECTRONIC TECHNOLOGIES, LLC AND SHOULD NOT BE USED WITHOUT WRITTEN PERMISSION

DIMENSION UNITS	SCALE
mm	NTS

GENERAL TOLERANCES (UNLESS SPECIFIED)

	MM	INCH
4 PLACES	±	±
3 PLACES	±	±
2 PLACES	± 0.2	±
1 PLACE	±	±
0 PLACES	±	±
ANGULAR TOL	± 3.0 °	

DRAFT WHERE APPLICABLE MUST REMAIN WITHIN DIMENSIONS

CURRENT REV DESC:

EC NO: 698212
DRWN: DANUSA 2022/03/03
CHK'D: DANUSA 2022/03/04
APPR: MRAMAKRISHNA 2022/03/04

INITIAL REVISION:
DRWN: SKLIM01 2005/10/26
APPR: PTLIM 2005/11/07

THIRD ANGLE PROJECTION | DRAWING: A3-SIZE | SERIES: 87898

molex

CUSTOM HEADER
2.54MM PITCH SINGLE ROW SINGLE WAFER SMT HEADER

PRODUCT CUSTOMER DRAWING

DOCUMENT NUMBER	DOC TYPE	DOC PART	REVISION
SD-87898-003	PSD	001	C1

MATERIAL NUMBER	CUSTOMER	SHEET NUMBER
SEE TABLE	GENERAL MARKET	4 OF 17

DOCUMENT STATUS	P1	RELEASE DATE	2022/03/04 09:00:56

FORMAT: Mel-lega-master-tb-prod-A3
REVISION: D
DATE: 2018/01/18

PACKAGING OPTION PART NO.						CKT SIZE	PEG	VOID POSITION	PLATING TYPE	DIMENSION			
TRAY WITHOUT CAP	TRAY WITH CAP	TUBE WITHOUT CAP	TUBE WITH CAP	TAPE & REEL WITHOUT CAP	TAPE & REEL WITH CAP					A	B	F	M
-------	-------	87898-0461	-------	-------	-------	4	---	-----	1	10.16	7.62	11.94	8.13
-------	-------	87898-0462	-------	-------	-------	4	---	-----	2	10.16	7.62	11.94	8.13
-------	-------	87898-0464	-------	-------	-------	4	---	-----	4	10.16	7.62	11.94	8.13
-------	-------	87898-0465	-------	-------	-------	4	---	-----	5	10.16	7.62	11.94	8.13
-------	-------	87898-0466	-------	-------	87898-0467	4	---	-----	6	10.16	7.62	11.94	8.13
-------	-------	-------	-------	-------	87898-0468	4	Y	-----	6	10.16	7.62	11.94	8.13
-------	-------	-------	-------	87898-0489	-------	4	Y	-----	5	10.16	7.62	16.74	12.93
-------	-------	87898-0561	-------	-------	-------	5	---	-----	1	12.70	10.16	11.94	8.13
-------	-------	87898-0562	-------	-------	-------	5	---	-----	2	12.70	10.16	11.94	8.13
-------	-------	87898-0564	-------	-------	-------	5	---	-----	4	12.70	10.16	11.94	8.13
-------	-------	87898-0565	-------	-------	-------	5	---	-----	5	12.70	10.16	11.94	8.13
-------	-------	87898-0566	87898-0567	-------	87898-0568	5	---	-----	6	12.70	10.16	11.94	8.13
-------	-------	87898-0661	-------	-------	-------	6	---	-----	1	15.24	12.70	11.94	8.13
-------	-------	87898-0662	-------	-------	-------	6	---	-----	2	15.24	12.70	11.94	8.13
-------	-------	87898-0664	-------	-------	-------	6	---	-----	4	15.24	12.70	11.94	8.13
-------	-------	87898-0665	-------	-------	C -------	6	---	-----	5	15.24	12.70	11.94	8.13
-------	-------	87898-0666	-------	-------	87898-0605	6	---	-----	6	15.24	12.70	11.94	8.13

4 CKT WITH PEG
FOR ILLUSTRATION ONLY

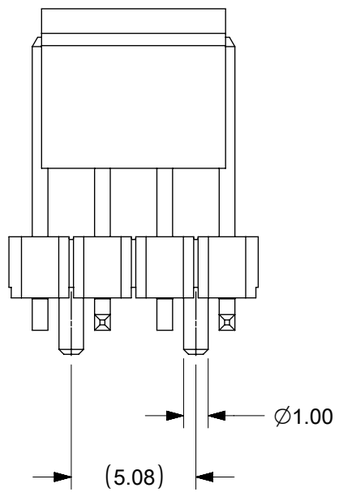

THIS DRAWING CONTAINS INFORMATION THAT IS PROPRIETARY TO MOLEX ELECTRONIC TECHNOLOGIES, LLC AND SHOULD NOT BE USED WITHOUT WRITTEN PERMISSION

DIMENSION UNITS	SCALE
mm	NTS

GENERAL TOLERANCES (UNLESS SPECIFIED)

	MM	INCH
4 PLACES	±	±
3 PLACES	±	±
2 PLACES	± 0.2	±
1 PLACE	±	±
0 PLACES	±	±
ANGULAR TOL	± 3.0 °	

DRAFT WHERE APPLICABLE MUST REMAIN WITHIN DIMENSIONS

CURRENT REV DESC:

EC NO: 698212
DRWN: DANUSA 2022/03/03
CHK'D: DANUSA 2022/03/04
APPR: MRAMAKRISHNA 2022/03/04

INITIAL REVISION:
DRWN: SKLIM01 2005/10/26
APPR: PTLIM 2005/11/07

THIRD ANGLE PROJECTION | DRAWING: A3-SIZE | SERIES: 87898

molex

CUSTOM HEADER
2.54MM PITCH SINGLE ROW SINGLE WAFER SMT HEADER

PRODUCT CUSTOMER DRAWING

DOCUMENT NUMBER	DOC TYPE	DOC PART	REVISION
SD-87898-003	PSD	001	C1

MATERIAL NUMBER	CUSTOMER	SHEET NUMBER
SEE TABLE	GENERAL MARKET	5 OF 17

DOCUMENT STATUS	P1	RELEASE DATE	2022/03/04 09:00:56

FORMAT: Mel-lega-master-lb-prod-A3
REVISION: D
DATE: 2018/01/18

PACKAGING OPTION PART NO.						CKT SIZE	VOID POSITION	PLATING TYPE	DIMENSION			
TRAY WITHOUT CAP	TRAY WITH CAP	TUBE WITHOUT CAP	TUBE WITH CAP	TAPE & REEL WITHOUT CAP	TAPE & REEL WITH CAP				A	B	F	M
-------	-------	87898-0761	-------	-------	-------	7	-----	1	17.78	15.24	11.94	8.13
-------	-------	87898-0762	-------	-------	-------	7	-----	2	17.78	15.24	11.94	8.13
-------	-------	87898-0764	-------	-------	-------	7	-----	4	17.78	15.24	11.94	8.13
-------	-------	87898-0765	-------	-------	-------	7	-----	5	17.78	15.24	11.94	8.13
-------	-------	87898-0766	-------	-------	-------	7	-----	6	17.78	15.24	11.94	8.13
-------	-------	87898-0861	-------	-------	-------	8	-----	1	20.32	17.78	11.94	8.13
-------	-------	87898-0862	-------	-------	-------	8	-----	2	20.32	17.78	11.94	8.13
-------	-------	87898-0864	-------	-------	-------	8	-----	4	20.32	17.78	11.94	8.13
-------	-------	87898-0865	-------	-------	-------	8	-----	5	20.32	17.78	11.94	8.13
-------	-------	87898-0866	-------	-------	-------	8	-----	6	20.32	17.78	11.94	8.13
-------	-------	87898-0961	-------	-------	-------	9	-----	1	22.86	20.32	11.94	8.13
-------	-------	87898-0962	-------	-------	-------	9	-----	2	22.86	20.32	11.94	8.13
-------	-------	87898-0964	-------	-------	-------	9	-----	4	22.86	20.32	11.94	8.13
-------	-------	87898-0965	-------	-------	-------	9	-----	5	22.86	20.32	11.94	8.13
-------	-------	87898-0966	-------	-------	-------	9	-----	6	22.86	20.32	11.94	8.13

THIS DRAWING CONTAINS INFORMATION THAT IS PROPRIETARY TO MOLEX ELECTRONIC TECHNOLOGIES, LLC AND SHOULD NOT BE USED WITHOUT WRITTEN PERMISSION

DIMENSION UNITS	SCALE
mm	NTS

GENERAL TOLERANCES (UNLESS SPECIFIED)

	MM	INCH
4 PLACES	±	±
3 PLACES	±	±
2 PLACES	± 0.2	±
1 PLACE	±	±
0 PLACES	±	±
ANGULAR TOL	± 3.0 °	

DRAFT WHERE APPLICABLE MUST REMAIN WITHIN DIMENSIONS

CURRENT REV DESC:

EC NO: 698212

DRWN: DANUSA 2022/03/03

CHK'D: DANUSA 2022/03/04

APPR: MRAMAKRISHNA 2022/03/04

INITIAL REVISION:

DRWN: SKLIM01 2005/10/26

APPR: PTLIM 2005/11/07

THIRD ANGLE PROJECTION | DRAWING: A3-SIZE | SERIES: 87898

molex

CUSTOM HEADER
2.54MM PITCH SINGLE ROW SINGLE WAFER SMT HEADER

PRODUCT CUSTOMER DRAWING

DOCUMENT NUMBER	DOC TYPE	DOC PART	REVISION
SD-87898-003	PSD	001	C1

MATERIAL NUMBER	CUSTOMER	SHEET NUMBER
SEE TABLE	GENERAL MARKET	6 OF 17

DOCUMENT STATUS	P1	RELEASE DATE	2022/03/04 09:00:56

FORMAT: Mel-lega-master-lb-prod-A3
REVISION: D
DATE: 2018/01/18

PACKAGING OPTION PART NO.						CKT SIZE	VOID POSITION	PLATING TYPE	DIMENSION			
TRAY WITHOUT CAP	TRAY WITH CAP	TUBE WITHOUT CAP	TUBE WITH CAP	TAPE & REEL WITHOUT CAP	TAPE & REEL WITH CAP				A	B	F	M
-------	-------	87898-1061	-------	-------	-------	10	-----	1	25.40	22.86	11.94	8.13
-------	-------	87898-1062	-------	-------	-------	10	-----	2	25.40	22.86	11.94	8.13
-------	-------	87898-1064	-------	-------	-------	10	-----	4	25.40	22.86	11.94	8.13
-------	-------	87898-1065	-------	-------	-------	10	-----	5	25.40	22.86	11.94	8.13
-------	-------	87898-1066	-------	-------	-------	10	-----	6	25.40	22.86	11.94	8.13
-------	-------	87898-1161	-------	-------	-------	11	-----	1	27.94	25.40	11.94	8.13
-------	-------	87898-1162	-------	-------	-------	11	-----	2	27.94	25.40	11.94	8.13
-------	-------	87898-1164	-------	-------	-------	11	-----	4	27.94	25.40	11.94	8.13
-------	-------	87898-1165	-------	-------	-------	11	-----	5	27.94	25.40	11.94	8.13
-------	-------	87898-1166	-------	-------	-------	11	-----	6	27.94	25.40	11.94	8.13
-------	-------	87898-1261	-------	-------	-------	12	-----	1	30.48	27.94	11.94	8.13
-------	-------	87898-1262	-------	-------	-------	12	-----	2	30.48	27.94	11.94	8.13
-------	-------	87898-1264	-------	-------	-------	12	-----	4	30.48	27.94	11.94	8.13
-------	-------	87898-1265	-------	-------	-------	12	-----	5	30.48	27.94	11.94	8.13
-------	-------	87898-1266	-------	-------	-------	12	-----	6	30.48	27.94	11.94	8.13

THIS DRAWING CONTAINS INFORMATION THAT IS PROPRIETARY TO MOLEX ELECTRONIC TECHNOLOGIES, LLC AND SHOULD NOT BE USED WITHOUT WRITTEN PERMISSION

DIMENSION UNITS	SCALE
mm	NTS

GENERAL TOLERANCES (UNLESS SPECIFIED)

	MM	INCH
4 PLACES	±	±
3 PLACES	±	±
2 PLACES	± 0.2	±
1 PLACE	±	±
0 PLACES	±	±
ANGULAR TOL	± 3.0 °	

DRAFT WHERE APPLICABLE MUST REMAIN WITHIN DIMENSIONS

CURRENT REV DESC:

EC NO: 698212
DRWN: DANUSA 2022/03/03
CHK'D: DANUSA 2022/03/04
APPR: MRAMAKRISHNA 2022/03/04

INITIAL REVISION:
DRWN: SKLIM01 2005/10/26
APPR: PTLIM 2005/11/07

THIRD ANGLE PROJECTION | DRAWING: A3-SIZE | SERIES: 87898

molex

CUSTOM HEADER
2.54MM PITCH SINGLE ROW SINGLE WAFER SMT HEADER

PRODUCT CUSTOMER DRAWING

DOCUMENT NUMBER	DOC TYPE	DOC PART	REVISION
SD-87898-003	PSD	001	C1

MATERIAL NUMBER	CUSTOMER	SHEET NUMBER
SEE TABLE	GENERAL MARKET	7 OF 17

DOCUMENT STATUS	P1	RELEASE DATE	2022/03/04 09:00:56

FORMAT: Mel-lega-master-lb-prod-A3
REVISION: D
DATE: 2018/01/18

PACKAGING OPTION PART NO.						CKT SIZE	VOID POSITION	PLATING TYPE	DIMENSION			
TRAY WITHOUT CAP	TRAY WITH CAP	TUBE WITHOUT CAP	TUBE WITH CAP	TAPE & REEL WITHOUT CAP	TAPE & REEL WITH CAP				A	B	F	M
-------	-------	87898-1361	-------	-------	-------	13	-----	1	33.02	30.48	11.94	8.13
-------	-------	87898-1362	-------	-------	-------	13	-----	2	33.02	30.48	11.94	8.13
-------	-------	87898-1364	-------	-------	-------	13	-----	4	33.02	30.48	11.94	8.13
-------	-------	87898-1365	-------	-------	-------	13	-----	5	33.02	30.48	11.94	8.13
-------	-------	87898-1366	-------	-------	-------	13	-----	6	33.02	30.48	11.94	8.13
-------	-------	87898-1461	-------	-------	-------	14	-----	1	35.56	33.02	11.94	8.13
-------	-------	87898-1462	-------	-------	-------	14	-----	2	35.56	33.02	11.94	8.13
-------	-------	87898-1464	-------	-------	-------	14	-----	4	35.56	33.02	11.94	8.13
-------	-------	87898-1465	-------	-------	-------	14	-----	5	35.56	33.02	11.94	8.13
-------	-------	87898-1466	-------	-------	-------	14	-----	6	35.56	33.02	11.94	8.13
-------	-------	87898-1561	-------	-------	-------	15	-----	1	38.10	35.56	11.94	8.13
-------	-------	87898-1562	-------	-------	-------	15	-----	2	38.10	35.56	11.94	8.13
-------	-------	87898-1564	-------	-------	-------	15	-----	4	38.10	35.56	11.94	8.13
-------	-------	87898-1565	-------	-------	-------	15	-----	5	38.10	35.56	11.94	8.13
-------	-------	87898-1566	-------	-------	-------	15	-----	6	38.10	35.56	11.94	8.13

THIS DRAWING CONTAINS INFORMATION THAT IS PROPRIETARY TO MOLEX ELECTRONIC TECHNOLOGIES, LLC AND SHOULD NOT BE USED WITHOUT WRITTEN PERMISSION

DIMENSION UNITS	SCALE
mm	NTS

GENERAL TOLERANCES (UNLESS SPECIFIED)

	MM	INCH
4 PLACES	±	±
3 PLACES	±	±
2 PLACES	± 0.2	±
1 PLACE	±	±
0 PLACES	±	±
ANGULAR TOL	± 3.0 °	

DRAFT WHERE APPLICABLE MUST REMAIN WITHIN DIMENSIONS

CURRENT REV DESC:

EC NO: 698212
DRWN: DANUSA 2022/03/03
CHK'D: DANUSA 2022/03/04
APPR: MRAMAKRISHNA 2022/03/04

INITIAL REVISION:
DRWN: SKLIM01 2005/10/26
APPR: PTLIM 2005/11/07

THIRD ANGLE PROJECTION | DRAWING: A3-SIZE | SERIES: 87898

molex

CUSTOM HEADER
2.54MM PITCH SINGLE ROW SINGLE WAFER SMT HEADER

PRODUCT CUSTOMER DRAWING

DOCUMENT NUMBER	DOC TYPE	DOC PART	REVISION
SD-87898-003	PSD	001	C1

MATERIAL NUMBER	CUSTOMER	SHEET NUMBER
SEE TABLE	GENERAL MARKET	8 OF 17

DOCUMENT STATUS	P1	RELEASE DATE	2022/03/04 09:00:56

FORMAT: Mel-lega-master-tb-prod-A3
REVISION: D
DATE: 2018/01/18

PACKAGING OPTION PART NO.						CKT SIZE	VOID POSITION	PLATING TYPE	DIMENSION			
TRAY WITHOUT CAP	TRAY WITH CAP	TUBE WITHOUT CAP	TUBE WITH CAP	TAPE & REEL WITHOUT CAP	TAPE & REEL WITH CAP				A	B	F	M
-------	-------	87898-1661	-------	-------	-------	16	-----	1	40.64	38.10	11.94	8.13
-------	-------	87898-1662	-------	-------	-------	16	-----	2	40.64	38.10	11.94	8.13
-------	-------	87898-1664	-------	-------	-------	16	-----	4	40.64	38.10	11.94	8.13
-------	-------	87898-1665	-------	-------	-------	16	-----	5	40.64	38.10	11.94	8.13
-------	-------	87898-1666	-------	-------	-------	16	-----	6	40.64	38.10	11.94	8.13
-------	-------	87898-1761	-------	-------	-------	17	-----	1	43.18	40.64	11.94	8.13
-------	-------	87898-1762	-------	-------	-------	17	-----	2	43.18	40.64	11.94	8.13
-------	-------	87898-1764	-------	-------	-------	17	-----	4	43.18	40.64	11.94	8.13
-------	-------	87898-1765	-------	-------	-------	17	-----	5	43.18	40.64	11.94	8.13
-------	-------	87898-1766	-------	-------	-------	17	-----	6	43.18	40.64	11.94	8.13
-------	-------	87898-1861	-------	-------	-------	18	-----	1	45.72	43.18	11.94	8.13
-------	-------	87898-1862	-------	-------	-------	18	-----	2	45.72	43.18	11.94	8.13
-------	-------	87898-1864	-------	-------	-------	18	-----	4	45.72	43.18	11.94	8.13
-------	-------	87898-1865	-------	-------	-------	18	-----	5	45.72	43.18	11.94	8.13
-------	-------	87898-1866	-------	-------	-------	18	-----	6	45.72	43.18	11.94	8.13

THIS DRAWING CONTAINS INFORMATION THAT IS PROPRIETARY TO MOLEX ELECTRONIC TECHNOLOGIES, LLC AND SHOULD NOT BE USED WITHOUT WRITTEN PERMISSION

DIMENSION UNITS	SCALE
mm	NTS

GENERAL TOLERANCES (UNLESS SPECIFIED)

	MM	INCH
4 PLACES	±	±
3 PLACES	±	±
2 PLACES	± 0.2	±
1 PLACE	±	±
0 PLACES	±	±
ANGULAR TOL	± 3.0 °	

DRAFT WHERE APPLICABLE MUST REMAIN WITHIN DIMENSIONS

CURRENT REV DESC:

EC NO: 698212
DRWN: DANUSA 2022/03/03
CHK'D: DANUSA 2022/03/04
APPR: MRAMAKRISHNA 2022/03/04

INITIAL REVISION:
DRWN: SKLIM01 2005/10/26
APPR: PTLIM 2005/11/07

THIRD ANGLE PROJECTION | DRAWING: A3-SIZE | SERIES: 87898

molex

CUSTOM HEADER
2.54MM PITCH SINGLE ROW SINGLE WAFER SMT HEADER

PRODUCT CUSTOMER DRAWING

DOCUMENT NUMBER	DOC TYPE	DOC PART	REVISION
SD-87898-003	PSD	001	C1

MATERIAL NUMBER	CUSTOMER	SHEET NUMBER
SEE TABLE	GENERAL MARKET	9 OF 17

DOCUMENT STATUS	P1	RELEASE DATE	2022/03/04 09:00:56

FORMAT: Mel-lega-master-lb-prod-A3
REVISION: D
DATE: 2018/01/18

PACKAGING OPTION PART NO.						CKT SIZE	VOID POSITION	PLATING TYPE	DIMENSION			
TRAY WITHOUT CAP	TRAY WITH CAP	TUBE WITHOUT CAP	TUBE WITH CAP	TAPE & REEL WITHOUT CAP	TAPE & REEL WITH CAP				A	B	F	M
-------	-------	87898-1961	-------	-------	-------	19	-----	1	48.26	45.72	11.94	8.13
-------	-------	87898-1962	-------	-------	-------	19	-----	2	48.26	45.72	11.94	8.13
-------	-------	87898-1964	-------	-------	-------	19	-----	4	48.26	45.72	11.94	8.13
-------	-------	87898-1965	-------	-------	-------	19	-----	5	48.26	45.72	11.94	8.13
-------	-------	87898-1966	-------	-------	-------	19	-----	6	48.26	45.72	11.94	8.13
-------	-------	87898-2061	-------	-------	-------	20	-----	1	50.80	48.26	11.94	8.13
-------	-------	87898-2062	-------	-------	-------	20	-----	2	50.80	48.26	11.94	8.13
-------	-------	87898-2064	-------	-------	-------	20	-----	4	50.80	48.26	11.94	8.13
-------	-------	87898-2065	-------	-------	-------	20	-----	5	50.80	48.26	11.94	8.13
-------	-------	87898-2066	-------	-------	-------	20	-----	6	50.80	48.26	11.94	8.13
-------	-------	87898-2161	-------	-------	-------	21	-----	1	53.34	50.80	11.94	8.13
-------	-------	87898-2162	-------	-------	-------	21	-----	2	53.34	50.80	11.94	8.13
-------	-------	87898-2164	-------	-------	-------	21	-----	4	53.34	50.80	11.94	8.13
-------	-------	87898-2165	-------	-------	-------	21	-----	5	53.34	50.80	11.94	8.13
-------	-------	87898-2166	-------	-------	-------	21	-----	6	53.34	50.80	11.94	8.13

THIS DRAWING CONTAINS INFORMATION THAT IS PROPRIETARY TO MOLEX ELECTRONIC TECHNOLOGIES, LLC AND SHOULD NOT BE USED WITHOUT WRITTEN PERMISSION

DIMENSION UNITS	SCALE
mm	NTS

GENERAL TOLERANCES (UNLESS SPECIFIED)

	MM	INCH
4 PLACES	±	±
3 PLACES	±	±
2 PLACES	± 0.2	±
1 PLACE	±	±
0 PLACES	±	±
ANGULAR TOL	± 3.0 °	

DRAFT WHERE APPLICABLE MUST REMAIN WITHIN DIMENSIONS

CURRENT REV DESC:

EC NO: 698212

DRWN: DANUSA 2022/03/03

CHK'D: DANUSA 2022/03/04

APPR: MRAMAKRISHNA 2022/03/04

INITIAL REVISION:

DRWN: SKLIM01 2005/10/26

APPR: PTLIM 2005/11/07

THIRD ANGLE PROJECTION | DRAWING: A3-SIZE | SERIES: 87898

molex

CUSTOM HEADER
2.54MM PITCH SINGLE ROW SINGLE WAFER SMT HEADER

PRODUCT CUSTOMER DRAWING

DOCUMENT NUMBER	DOC TYPE	DOC PART	REVISION
SD-87898-003	PSD	001	C1

MATERIAL NUMBER	CUSTOMER	SHEET NUMBER
SEE TABLE	GENERAL MARKET	10 OF 17

DOCUMENT STATUS	P1	RELEASE DATE	2022/03/04 09:00:56

FORMAT: Mel-lega-master-tb-prod-A3
REVISION: D
DATE: 2018/01/18

PACKAGING OPTION PART NO.						CKT SIZE	VOID POSITION	PLATING TYPE	DIMENSION			
TRAY WITHOUT CAP	TRAY WITH CAP	TUBE WITHOUT CAP	TUBE WITH CAP	TAPE & REEL WITHOUT CAP	TAPE & REEL WITH CAP				A	B	F	M
-------	-------	87898-2261	-------	-------	-------	22	-----	1	55.88	53.34	11.94	8.13
-------	-------	87898-2262	-------	-------	-------	22	-----	2	55.88	53.34	11.94	8.13
-------	-------	87898-2264	-------	-------	-------	22	-----	4	55.88	53.34	11.94	8.13
-------	-------	87898-2265	-------	-------	-------	22	-----	5	55.88	53.34	11.94	8.13
-------	-------	87898-2266	-------	-------	-------	22	-----	6	55.88	53.34	11.94	8.13
-------	-------	87898-2361	-------	-------	-------	23	-----	1	58.42	55.88	11.94	8.13
-------	-------	87898-2362	-------	-------	-------	23	-----	2	58.42	55.88	11.94	8.13
-------	-------	87898-2364	-------	-------	-------	23	-----	4	58.42	55.88	11.94	8.13
-------	-------	87898-2365	-------	-------	-------	23	-----	5	58.42	55.88	11.94	8.13
-------	-------	87898-2366	-------	-------	-------	23	-----	6	58.42	55.88	11.94	8.13
-------	-------	87898-2461	-------	-------	-------	24	-----	1	60.96	58.42	11.94	8.13
-------	-------	87898-2462	-------	-------	-------	24	-----	2	60.96	58.42	11.94	8.13
-------	-------	87898-2464	-------	-------	-------	24	-----	4	60.96	58.42	11.94	8.13
-------	-------	87898-2465	-------	-------	-------	24	-----	5	60.96	58.42	11.94	8.13
-------	-------	87898-2466	-------	-------	-------	24	-----	6	60.96	58.42	11.94	8.13

THIS DRAWING CONTAINS INFORMATION THAT IS PROPRIETARY TO MOLEX ELECTRONIC TECHNOLOGIES, LLC AND SHOULD NOT BE USED WITHOUT WRITTEN PERMISSION

DIMENSION UNITS	SCALE
mm	NTS

GENERAL TOLERANCES (UNLESS SPECIFIED)

	MM	INCH
4 PLACES	±	±
3 PLACES	±	±
2 PLACES	± 0.2	±
1 PLACE	±	±
0 PLACES	±	±
ANGULAR TOL	± 3.0 °	

DRAFT WHERE APPLICABLE MUST REMAIN WITHIN DIMENSIONS

CURRENT REV DESC:

EC NO: 698212

DRWN: DANUSA 2022/03/03

CHK'D: DANUSA 2022/03/04

APPR: MRAMAKRISHNA 2022/03/04

INITIAL REVISION:

DRWN: SKLIM01 2005/10/26

APPR: PTLIM 2005/11/07

THIRD ANGLE PROJECTION | DRAWING: A3-SIZE | SERIES: 87898

molex

CUSTOM HEADER
2.54MM PITCH SINGLE ROW SINGLE WAFER SMT HEADER

PRODUCT CUSTOMER DRAWING

DOCUMENT NUMBER	DOC TYPE	DOC PART	REVISION
SD-87898-003	PSD	001	C1

MATERIAL NUMBER	CUSTOMER	SHEET NUMBER
SEE TABLE	GENERAL MARKET	11 OF 17

DOCUMENT STATUS	P1	RELEASE DATE	2022/03/04 09:00:56

FORMAT: Mel-lega-master-tb-prod-A3
REVISION: D
DATE: 2018/01/18

PACKAGING OPTION PART NO.						CKT SIZE	VOID POSITION	PLATING TYPE	DIMENSION			
TRAY WITHOUT CAP	TRAY WITH CAP	TUBE WITHOUT CAP	TUBE WITH CAP	TAPE & REEL WITHOUT CAP	TAPE & REEL WITH CAP				A	B	F	M
-------	-------	87898-2561	-------	-------	-------	25	-----	1	63.50	60.96	11.94	8.13
-------	-------	87898-2562	-------	-------	-------	25	-----	2	63.50	60.96	11.94	8.13
-------	-------	87898-2564	-------	-------	-------	25	-----	4	63.50	60.96	11.94	8.13
-------	-------	87898-2565	-------	-------	-------	25	-----	5	63.50	60.96	11.94	8.13
-------	-------	87898-2566	-------	-------	-------	25	-----	6	63.50	60.96	11.94	8.13
-------	-------	87898-2661	-------	-------	-------	26	-----	1	66.04	63.50	11.94	8.13
-------	-------	87898-2662	-------	-------	-------	26	-----	2	66.04	63.50	11.94	8.13
-------	-------	87898-2664	-------	-------	-------	26	-----	4	66.04	63.50	11.94	8.13
-------	-------	87898-2665	-------	-------	-------	26	-----	5	66.04	63.50	11.94	8.13
-------	-------	87898-2666	-------	-------	-------	26	-----	6	66.04	63.50	11.94	8.13
-------	-------	87898-2761	-------	-------	-------	27	-----	1	68.58	66.04	11.94	8.13
-------	-------	87898-2762	-------	-------	-------	27	-----	2	68.58	66.04	11.94	8.13
-------	-------	87898-2764	-------	-------	-------	27	-----	4	68.58	66.04	11.94	8.13
-------	-------	87898-2765	-------	-------	-------	27	-----	5	68.58	66.04	11.94	8.13
-------	-------	87898-2766	-------	-------	-------	27	-----	6	68.58	66.04	11.94	8.13

THIS DRAWING CONTAINS INFORMATION THAT IS PROPRIETARY TO MOLEX ELECTRONIC TECHNOLOGIES, LLC AND SHOULD NOT BE USED WITHOUT WRITTEN PERMISSION

DIMENSION UNITS	SCALE
mm	NTS

GENERAL TOLERANCES (UNLESS SPECIFIED)

	MM	INCH
4 PLACES	±	±
3 PLACES	±	±
2 PLACES	± 0.2	±
1 PLACE	±	±
0 PLACES	±	±
ANGULAR TOL	± 3.0 °	

DRAFT WHERE APPLICABLE MUST REMAIN WITHIN DIMENSIONS

CURRENT REV DESC:

EC NO: 698212

DRWN: DANUSA 2022/03/03

CHK'D: DANUSA 2022/03/04

APPR: MRAMAKRISHNA 2022/03/04

INITIAL REVISION:

DRWN: SKLIM01 2005/10/26

APPR: PTLIM 2005/11/07

THIRD ANGLE PROJECTION | DRAWING: A3-SIZE | SERIES: 87898

molex

CUSTOM HEADER
2.54MM PITCH SINGLE ROW SINGLE WAFER SMT HEADER

PRODUCT CUSTOMER DRAWING

DOCUMENT NUMBER	DOC TYPE	DOC PART	REVISION
SD-87898-003	PSD	001	C1

MATERIAL NUMBER	CUSTOMER	SHEET NUMBER
SEE TABLE	GENERAL MARKET	12 OF 17

DOCUMENT STATUS	P1	RELEASE DATE	2022/03/04 09:00:56

FORMAT: Mel-lega-master-tb-prod-A3
REVISION: D
DATE: 2018/01/18

PACKAGING OPTION PART NO.						CKT SIZE	VOID POSITION	PLATING TYPE	DIMENSION			
TRAY WITHOUT CAP	TRAY WITH CAP	TUBE WITHOUT CAP	TUBE WITH CAP	TAPE & REEL WITHOUT CAP	TAPE & REEL WITH CAP				A	B	F	M
-------	-------	87898-2861	-------	-------	-------	28	-----	1	71.12	68.58	11.94	8.13
-------	-------	87898-2862	-------	-------	-------	28	-----	2	71.12	68.58	11.94	8.13
-------	-------	87898-2864	-------	-------	-------	28	-----	4	71.12	68.58	11.94	8.13
-------	-------	87898-2865	-------	-------	-------	28	-----	5	71.12	68.58	11.94	8.13
-------	-------	87898-2866	-------	-------	-------	28	-----	6	71.12	68.58	11.94	8.13
-------	-------	87898-2961	-------	-------	-------	29	-----	1	73.66	71.12	11.94	8.13
-------	-------	87898-2962	-------	-------	-------	29	-----	2	73.66	71.12	11.94	8.13
-------	-------	87898-2964	-------	-------	-------	29	-----	4	73.66	71.12	11.94	8.13
-------	-------	87898-2965	-------	-------	-------	29	-----	5	73.66	71.12	11.94	8.13
-------	-------	87898-2966	-------	-------	-------	29	-----	6	73.66	71.12	11.94	8.13
-------	-------	87898-3061	-------	-------	-------	30	-----	1	76.20	73.66	11.94	8.13
-------	-------	87898-3062	-------	-------	-------	30	-----	2	76.20	73.66	11.94	8.13
-------	-------	87898-3064	-------	-------	-------	30	-----	4	76.20	73.66	11.94	8.13
-------	-------	87898-3065	-------	-------	-------	30	-----	5	76.20	73.66	11.94	8.13
-------	-------	87898-3066	-------	-------	-------	30	-----	6	76.20	73.66	11.94	8.13

THIS DRAWING CONTAINS INFORMATION THAT IS PROPRIETARY TO MOLEX ELECTRONIC TECHNOLOGIES, LLC AND SHOULD NOT BE USED WITHOUT WRITTEN PERMISSION

DIMENSION UNITS	SCALE
mm	NTS

GENERAL TOLERANCES (UNLESS SPECIFIED)

	MM	INCH
4 PLACES	±	±
3 PLACES	±	±
2 PLACES	± 0.2	±
1 PLACE	±	±
0 PLACES	±	±
ANGULAR TOL	± 3.0 °	

DRAFT WHERE APPLICABLE MUST REMAIN WITHIN DIMENSIONS

CURRENT REV DESC:

EC NO: 698212

DRWN: DANUSA 2022/03/03

CHK'D: DANUSA 2022/03/04

APPR: MRAMAKRISHNA 2022/03/04

INITIAL REVISION:

DRWN: SKLIM01 2005/10/26

APPR: PTLIM 2005/11/07

THIRD ANGLE PROJECTION | DRAWING: A3-SIZE | SERIES: 87898

molex

CUSTOM HEADER
2.54MM PITCH SINGLE ROW SINGLE WAFER SMT HEADER

PRODUCT CUSTOMER DRAWING

DOCUMENT NUMBER	DOC TYPE	DOC PART	REVISION
SD-87898-003	PSD	001	C1

MATERIAL NUMBER	CUSTOMER	SHEET NUMBER
SEE TABLE	GENERAL MARKET	13 OF 17

DOCUMENT STATUS	P1	RELEASE DATE	2022/03/04 09:00:56

FORMAT: Mel-lega-master-tb-prod-A3
REVISION: D
DATE: 2018/01/18

PACKAGING OPTION PART NO.						CKT SIZE	VOID POSITION	PLATING TYPE	DIMENSION			
TRAY WITHOUT CAP	TRAY WITH CAP	TUBE WITHOUT CAP	TUBE WITH CAP	TAPE & REEL WITHOUT CAP	TAPE & REEL WITH CAP				A	B	F	M
-------	-------	87898-3161	-------	-------	-------	31	-----	1	78.74	76.20	11.94	8.13
-------	-------	87898-3162	-------	-------	-------	31	-----	2	78.74	76.20	11.94	8.13
-------	-------	87898-3164	-------	-------	-------	31	-----	4	78.74	76.20	11.94	8.13
-------	-------	87898-3165	-------	-------	-------	31	-----	5	78.74	76.20	11.94	8.13
-------	-------	87898-3166	-------	-------	-------	31	-----	6	78.74	76.20	11.94	8.13
-------	-------	87898-3261	-------	-------	-------	32	-----	1	81.28	78.74	11.94	8.13
-------	-------	87898-3262	-------	-------	-------	32	-----	2	81.28	78.74	11.94	8.13
-------	-------	87898-3264	-------	-------	-------	32	-----	4	81.28	78.74	11.94	8.13
-------	-------	87898-3265	-------	-------	-------	32	-----	5	81.28	78.74	11.94	8.13
-------	-------	87898-3266	-------	-------	-------	32	-----	6	81.28	78.74	11.94	8.13
-------	-------	87898-3361	-------	-------	-------	33	-----	1	83.82	81.28	11.94	8.13
-------	-------	87898-3362	-------	-------	-------	33	-----	2	83.82	81.28	11.94	8.13
-------	-------	87898-3364	-------	-------	-------	33	-----	4	83.82	81.28	11.94	8.13
-------	-------	87898-3365	-------	-------	-------	33	-----	5	83.82	81.28	11.94	8.13
-------	-------	87898-3366	-------	-------	-------	33	-----	6	83.82	81.28	11.94	8.13

THIS DRAWING CONTAINS INFORMATION THAT IS PROPRIETARY TO MOLEX ELECTRONIC TECHNOLOGIES, LLC AND SHOULD NOT BE USED WITHOUT WRITTEN PERMISSION

DIMENSION UNITS	SCALE
mm	NTS

GENERAL TOLERANCES (UNLESS SPECIFIED)

	MM	INCH
4 PLACES	±	±
3 PLACES	±	±
2 PLACES	± 0.2	±
1 PLACE	±	±
0 PLACES	±	±
ANGULAR TOL	± 3.0 °	

DRAFT WHERE APPLICABLE MUST REMAIN WITHIN DIMENSIONS

CURRENT REV DESC:

EC NO: 698212

DRWN: DANUSA 2022/03/03

CHK'D: DANUSA 2022/03/04

APPR: MRAMAKRISHNA 2022/03/04

INITIAL REVISION:

DRWN: SKLIM01 2005/10/26

APPR: PTLIM 2005/11/07

THIRD ANGLE PROJECTION | DRAWING: A3-SIZE | SERIES: 87898

molex

CUSTOM HEADER
2.54MM PITCH SINGLE ROW SINGLE WAFER SMT HEADER

PRODUCT CUSTOMER DRAWING

DOCUMENT NUMBER	DOC TYPE	DOC PART	REVISION
SD-87898-003	PSD	001	C1

MATERIAL NUMBER	CUSTOMER	SHEET NUMBER
SEE TABLE	GENERAL MARKET	14 OF 17

DOCUMENT STATUS	P1	RELEASE DATE	2022/03/04 09:00:56

FORMAT: Mel-lega-master-tb-prod-A3
REVISION: D
DATE: 2018/01/18

PACKAGING OPTION PART NO.						CKT SIZE	VOID POSITION	PLATING TYPE	DIMENSION			
TRAY WITHOUT CAP	TRAY WITH CAP	TUBE WITHOUT CAP	TUBE WITH CAP	TAPE & REEL WITHOUT CAP	TAPE & REEL WITH CAP				A	B	F	M
-------	-------	87898-3461	-------	-------	-------	34	-----	1	86.36	83.82	11.94	8.13
-------	-------	87898-3462	-------	-------	-------	34	-----	2	86.36	83.82	11.94	8.13
-------	-------	87898-3464	-------	-------	-------	34	-----	4	86.36	83.82	11.94	8.13
-------	-------	87898-3465	-------	-------	-------	34	-----	5	86.36	83.82	11.94	8.13
-------	-------	87898-3466	-------	-------	-------	34	-----	6	86.36	83.82	11.94	8.13
-------	-------	87898-3561	-------	-------	-------	35	-----	1	88.90	86.36	11.94	8.13
-------	-------	87898-3562	-------	-------	-------	35	-----	2	88.90	86.36	11.94	8.13
-------	-------	87898-3564	-------	-------	-------	35	-----	4	88.90	86.36	11.94	8.13
-------	-------	87898-3565	-------	-------	-------	35	-----	5	88.90	86.36	11.94	8.13
-------	-------	87898-3566	-------	-------	-------	35	-----	6	88.90	86.36	11.94	8.13
-------	-------	87898-3661	-------	-------	-------	36	-----	1	91.44	88.90	11.94	8.13
-------	-------	87898-3662	-------	-------	-------	36	-----	2	91.44	88.90	11.94	8.13
-------	-------	87898-3664	-------	-------	-------	36	-----	4	91.44	88.90	11.94	8.13
-------	-------	87898-3665	-------	-------	-------	36	-----	5	91.44	88.90	11.94	8.13
-------	-------	87898-3666	-------	-------	-------	36	-----	6	91.44	88.90	11.94	8.13

THIS DRAWING CONTAINS INFORMATION THAT IS PROPRIETARY TO MOLEX ELECTRONIC TECHNOLOGIES, LLC AND SHOULD NOT BE USED WITHOUT WRITTEN PERMISSION

DIMENSION UNITS	SCALE
mm	NTS

GENERAL TOLERANCES (UNLESS SPECIFIED)

	MM	INCH
4 PLACES	±	±
3 PLACES	±	±
2 PLACES	± 0.2	±
1 PLACE	±	±
0 PLACES	±	±
ANGULAR TOL	± 3.0 °	

DRAFT WHERE APPLICABLE MUST REMAIN WITHIN DIMENSIONS

CURRENT REV DESC:

EC NO: 698212

DRWN: DANUSA 2022/03/03

CHK'D: DANUSA 2022/03/04

APPR: MRAMAKRISHNA 2022/03/04

INITIAL REVISION:

DRWN: SKLIM01 2005/10/26

APPR: PTLIM 2005/11/07

THIRD ANGLE PROJECTION | DRAWING: A3-SIZE | SERIES: 87898

molex

CUSTOM HEADER
2.54MM PITCH SINGLE ROW SINGLE WAFER SMT HEADER

PRODUCT CUSTOMER DRAWING

DOCUMENT NUMBER	DOC TYPE	DOC PART	REVISION
SD-87898-003	PSD	001	C1

MATERIAL NUMBER	CUSTOMER	SHEET NUMBER
SEE TABLE	GENERAL MARKET	15 OF 17

DOCUMENT STATUS	P1	RELEASE DATE	2022/03/04 09:00:56

FORMAT: Mel-lega-master-lb-prod-A3
REVISION: D
DATE: 2018/01/18

PACKAGING OPTION PART NO.						CKT SIZE	VOID POSITION	PLATING TYPE	DIMENSION			
TRAY WITHOUT CAP	TRAY WITH CAP	TUBE WITHOUT CAP	TUBE WITH CAP	TAPE & REEL WITHOUT CAP	TAPE & REEL WITH CAP				A	B	F	M
-------	-------	87898-3761	-------	-------	-------	37	-----	1	93.98	91.44	11.94	8.13
-------	-------	87898-3762	-------	-------	-------	37	-----	2	93.98	91.44	11.94	8.13
-------	-------	87898-3764	-------	-------	-------	37	-----	4	93.98	91.44	11.94	8.13
-------	-------	87898-3765	-------	-------	-------	37	-----	5	93.98	91.44	11.94	8.13
-------	-------	87898-3766	-------	-------	-------	37	-----	6	93.98	91.44	11.94	8.13
-------	-------	87898-3861	-------	-------	-------	38	-----	1	96.52	93.98	11.94	8.13
-------	-------	87898-3862	-------	-------	-------	38	-----	2	96.52	93.98	11.94	8.13
-------	-------	87898-3864	-------	-------	-------	38	-----	4	96.52	93.98	11.94	8.13
-------	-------	87898-3865	-------	-------	-------	38	-----	5	96.52	93.98	11.94	8.13
-------	-------	87898-3866	-------	-------	-------	38	-----	6	96.52	93.98	11.94	8.13
-------	-------	87898-3961	-------	-------	-------	39	-----	1	99.06	96.52	11.94	8.13
-------	-------	87898-3962	-------	-------	-------	39	-----	2	99.06	96.52	11.94	8.13
-------	-------	87898-3964	-------	-------	-------	39	-----	4	99.06	96.52	11.94	8.13
-------	-------	87898-3965	-------	-------	-------	39	-----	5	99.06	96.52	11.94	8.13
-------	-------	87898-3966	-------	-------	-------	39	-----	6	99.06	96.52	11.94	8.13

THIS DRAWING CONTAINS INFORMATION THAT IS PROPRIETARY TO MOLEX ELECTRONIC TECHNOLOGIES, LLC AND SHOULD NOT BE USED WITHOUT WRITTEN PERMISSION

DIMENSION UNITS	SCALE
mm	NTS

GENERAL TOLERANCES (UNLESS SPECIFIED)

	MM	INCH
4 PLACES	±	±
3 PLACES	±	±
2 PLACES	± 0.2	±
1 PLACE	±	±
0 PLACES	±	±
ANGULAR TOL	± 3.0 °	

DRAFT WHERE APPLICABLE MUST REMAIN WITHIN DIMENSIONS

CURRENT REV DESC:

EC NO: 698212
DRWN: DANUSA 2022/03/03
CHK'D: DANUSA 2022/03/04
APPR: MRAMAKRISHNA 2022/03/04

INITIAL REVISION:
DRWN: SKLIM01 2005/10/26
APPR: PTLIM 2005/11/07

THIRD ANGLE PROJECTION | DRAWING: A3-SIZE | SERIES: 87898

molex

CUSTOM HEADER
2.54MM PITCH SINGLE ROW SINGLE WAFER SMT HEADER

PRODUCT CUSTOMER DRAWING

DOCUMENT NUMBER	DOC TYPE	DOC PART	REVISION
SD-87898-003	PSD	001	C1

MATERIAL NUMBER	CUSTOMER	SHEET NUMBER
SEE TABLE	GENERAL MARKET	16 OF 17

DOCUMENT STATUS	P1	RELEASE DATE	2022/03/04 09:00:56

FORMAT: Mel-lega-master-lb-prod-A3
REVISION: D
DATE: 2018/01/18

PACKAGING OPTION PART NO.						CKT SIZE	VOID POSITION	PLATING TYPE	DIMENSION			
TRAY WITHOUT CAP	TRAY WITH CAP	TUBE WITHOUT CAP	TUBE WITH CAP	TAPE & REEL WITHOUT CAP	TAPE & REEL WITH CAP				A	B	F	M
-------	-------	87898-4061	-------	-------	-------	40	-----	1	101.6	99.06	11.94	8.13
-------	-------	87898-4062	-------	-------	-------	40	-----	2	101.6	99.06	11.94	8.13
-------	-------	87898-4064	-------	-------	-------	40	-----	4	101.6	99.06	11.94	8.13
-------	-------	87898-4065	-------	-------	-------	40	-----	5	101.6	99.06	11.94	8.13
-------	-------	87898-4066	-------	-------	-------	40	-----	6	101.6	99.06	11.94	8.13

THIS DRAWING CONTAINS INFORMATION THAT IS PROPRIETARY TO MOLEX ELECTRONIC TECHNOLOGIES, LLC AND SHOULD NOT BE USED WITHOUT WRITTEN PERMISSION

DIMENSION UNITS	SCALE
mm	NTS

GENERAL TOLERANCES (UNLESS SPECIFIED)

	MM	INCH
4 PLACES	±	±
3 PLACES	±	±
2 PLACES	± 0.2	±
1 PLACE	±	±
0 PLACES	±	±
ANGULAR TOL	± 3.0 °	

DRAFT WHERE APPLICABLE MUST REMAIN WITHIN DIMENSIONS

CURRENT REV DESC:

EC NO: 698212
DRWN: DANUSA 2022/03/03
CHK'D: DANUSA 2022/03/04
APPR: MRAMAKRISHNA 2022/03/04

INITIAL REVISION:
DRWN: SKLIM01 2005/10/26
APPR: PTLIM 2005/11/07

THIRD ANGLE PROJECTION | DRAWING: A3-SIZE | SERIES: 87898

molex

CUSTOM HEADER
2.54MM PITCH SINGLE ROW SINGLE WAFER SMT HEADER

PRODUCT CUSTOMER DRAWING

DOCUMENT NUMBER	DOC TYPE	DOC PART	REVISION
SD-87898-003	PSD	001	C1

MATERIAL NUMBER	CUSTOMER	SHEET NUMBER
SEE TABLE	GENERAL MARKET	17 OF 17

DOCUMENT STATUS	P1	RELEASE DATE	2022/03/04 09:00:56

FORMAT: Mel-lega-master-tb-prod-A3
REVISION: D
DATE: 2018/01/18