PART NO.	A79617-001	REV	ECO	DATE	APP
		D	99546	05-25-13	TLM

MATERIALS & SPECIFICATIONS

INSULATORS
THERMOPLASTIC PER ASTM D5138

CONTACT MATERIAL
PINS - BERYLLIUM COPPER PER ASTM B194, ALLOY C17200
SOCKET - COPPER ALLOY PER MIL-DTL-32139

CONTACT FINISH
GOLD PLATE PER ASTM B488, TYPE II (HARD GOLD), CODE C, CLASS 1.27

TERMINATION FINISH
SOLDER COATED WITH SN63 PER J-STD-006 OR SN60 PER AMS-P-81728

CURRENT RATING
1 AMP PER MIL-DTL-32139

CONTACT RESISTANCE
71 MILLIOHM MAX (71mV DROP MAX) @ 1.0 AMPS PER MIL-DTL-32139

PERFORMANCE
PRODUCT FAMILY TESTED TO AND PASSED THE PERFORMANCE SPECIFICATIONS OF TABLE VIII OF MIL-DTL-32139



ACTUAL SIZE

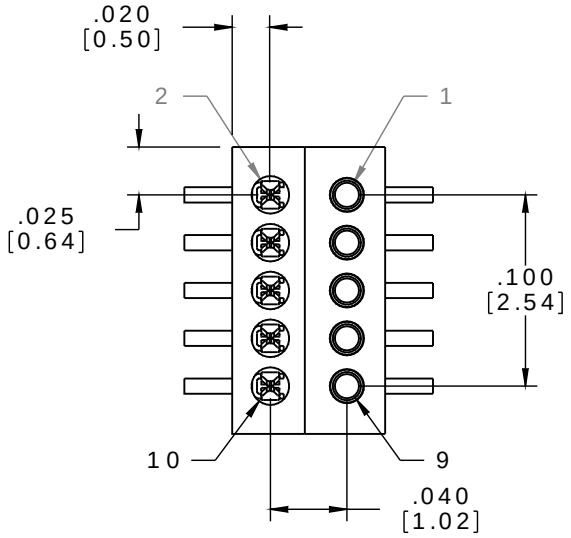

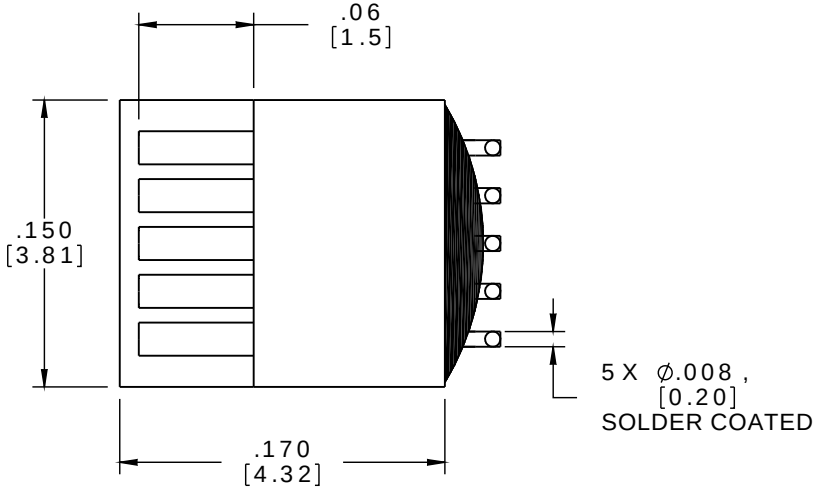

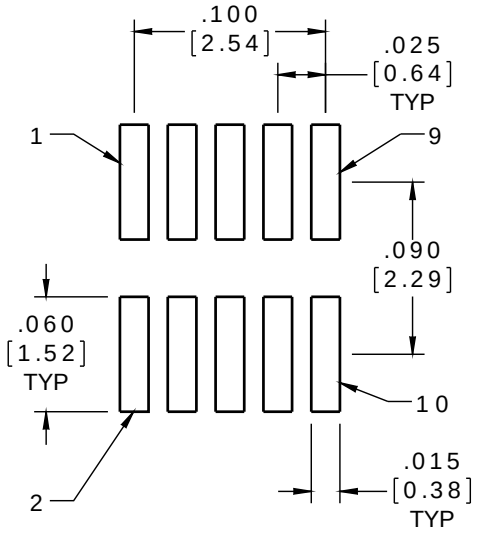

SUGGESTED PAD LAYOUT

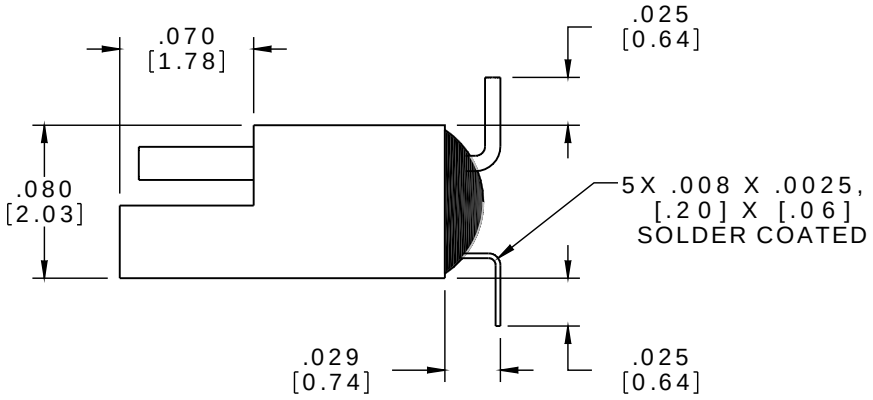

NOTE:

DIMENSIONS IN [ ] ARE IN MILLIMETERS UNLESS OTHERWISE NOTED AND ARE FOR REFERENCE ONLY

PZN / SLDW	THIRD ANGLE -TOLERANCES- UNLESS OTHERWISE NOTED DIMENSIONS IN INCHES 2 PL DEC± .01 3 PL DEC± .005 4 PL DEC± .0005 ANGLES ± 1°	THIS DRAWING CONTAINS CONFIDENTIAL AND PROPRIETARY INFORMATION WHICH IS THE PROPERTY OF OMNETICS CONNECTOR CORP. THIS DOCUMENT MAY NOT, IN WHOLE OR IN PART, BE DUPLICATED, OR DISCLOSED FOR ANY PURPOSE, WITHOUT WRITTEN PERMISSION FROM OMNETICS CONNECTOR CORP.	DFTM. NJS — DATE 08-24-09 CHK'D. — DATE APP'D. — DATE	TITLE: (10) CONTACT POLARIZED MALE/FEMALE NANO CONNECTOR

OMNETICS CONNECTOR CORPORATION
7260 COMMERCE CIRCLE EAST
MINNEAPOLIS, MN 55432
WWW.OMNETICS.COM

CAGE CODE	61873
DWG NO.	A79617-001
SHEET 1 OF 1	REV D
SCALE: 10:1	