THIS COPY IS PROVIDED ON A RESTRICTED BASIS AND IS NOT TO BE USED IN ANY WAY DETRIMENTAL TO THE INTERESTS OF PANDUIT CORP.

PANDUIT PART NUMBER	WEIGHT
FRTBWG12	1.10 LBS/EACH (498.9 g/EACH)

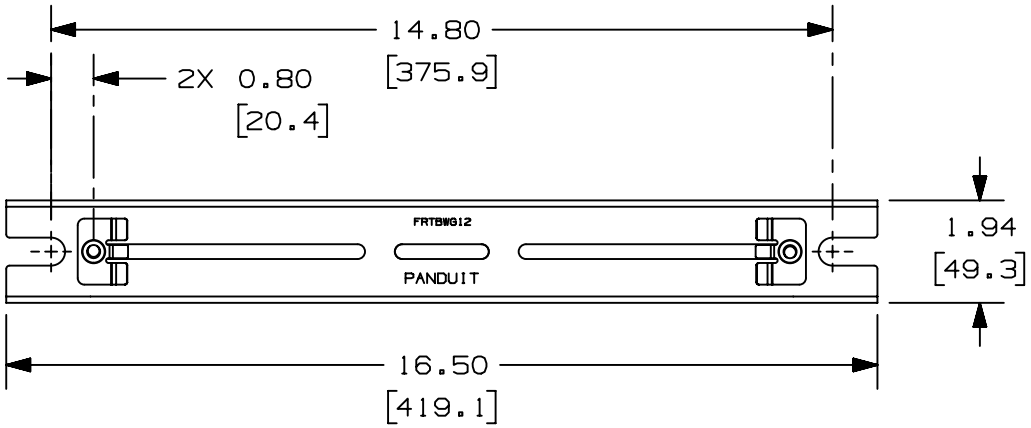

NOTES:
1. SEE CURRENT CATALOG FOR ADDITIONAL PART SUFFIXES TO INDICATE COLOR AND/OR PACKAGE QUANTITY.
2. THE FIBERRUNNER TRAPEZE BRACKET FOR WYR-GRID 12" PATHWAY INCLUDES:
   ONE (1) FIBERRUNNER TRAPEZE BRACKET FOR WYR-GRID 12" PATHWAY
   TWO (2) FIBERRUNNER TRAPEZE BRACKET WYR-GRID CLIP ASSEMBLY.
3. DIMENSIONS IN PARENTHESES ARE METRIC.

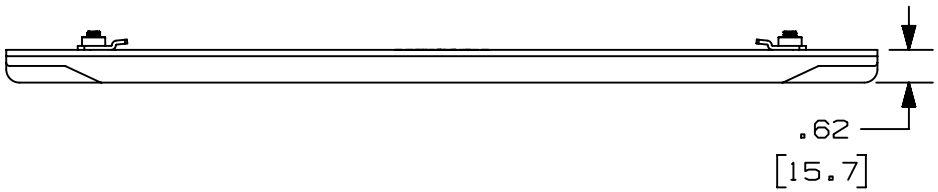

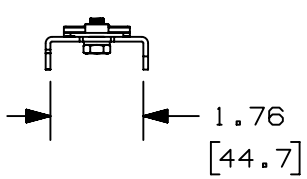

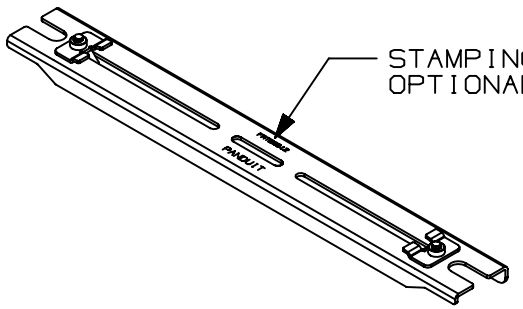

REV	DATE	BY	CHK	APR	DESCRIPTION	ECN
02A	9-20-19	LEE	FWI	FWI	C. "STAMPING OPTIONAL" LABEL ADDED SEE PREVIOUS REVISION FOR HISTORY	V09002CN/06

TITLE
FIBERRUNNER TRAPEZE BRACKET FOR WYR-GRID 12" PATHWAY (FRTBWG12)
CUSTOMER DRAWING

ITEM REVISION NAME: 10D165AE/02
DATASET FILE NAME: 10D165AE_DC/02A

UNLESS OTHERWISE SPECIFIED, DIMENSIONAL TOLERANCES ARE: IN [mm]
.X ± .XXX ±
.XX ± .01 [.25] ANGLES ±
THIRD ANGLE PROJECTION

MATERIAL: STEEL

DRAWING NUMBER: 10D165AE-DC

DRAWN BY	DATE	CHK	SCALE	SIZE
JAHA	05-05-11	EB	NONE	A

SHT 1 OF 1

D10100DA/16