FACE VIEW-MALE INSERT

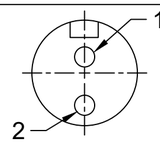	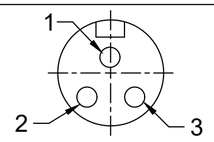	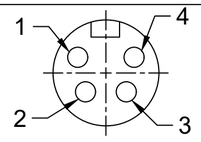	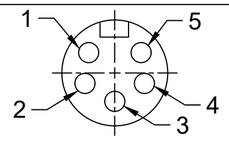	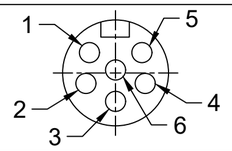
1 WHITE 2 BLACK	1 GREEN/YELLOW 2 BLACK 3 WHITE	1 BLACK 2 WHITE 3 RED 4 GREEN/YELLOW	1 WHITE 2 RED 3 GREEN/YELLOW 4 ORANGE 5 BLACK	1 WHITE 2 RED 3 GREEN/YELLOW 4 ORANGE 5 BLACK 6 BLUE

B1

MATERIAL NUMBER	ENGINEERING NUMBER	POLES	FINISHED LENGTH
1300130090	1R2007A20A120	2	12 IN [1FT]
1300130248	1R3007A20F020	3	2FT [0.6M]
1300130387	1R4007A20F060	4	6FT [1.8M]
1300130536	1R5007A20F030	5	3FT [0.9M]
1300131009	1R6007A20F030	6	3FT [0.9M]

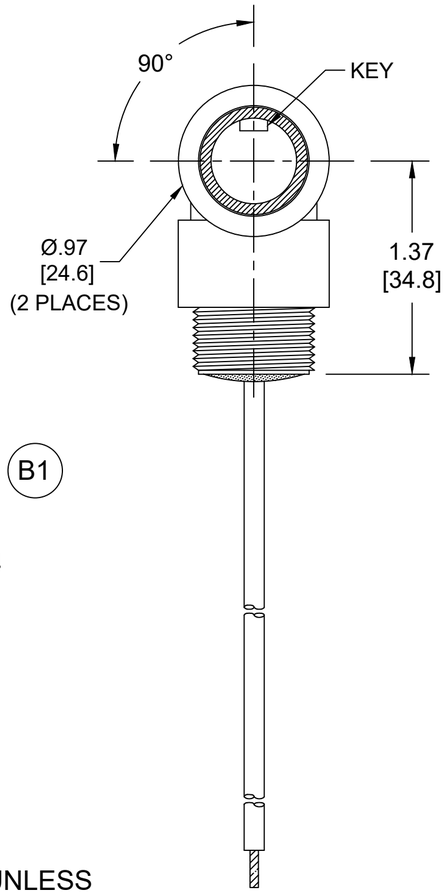

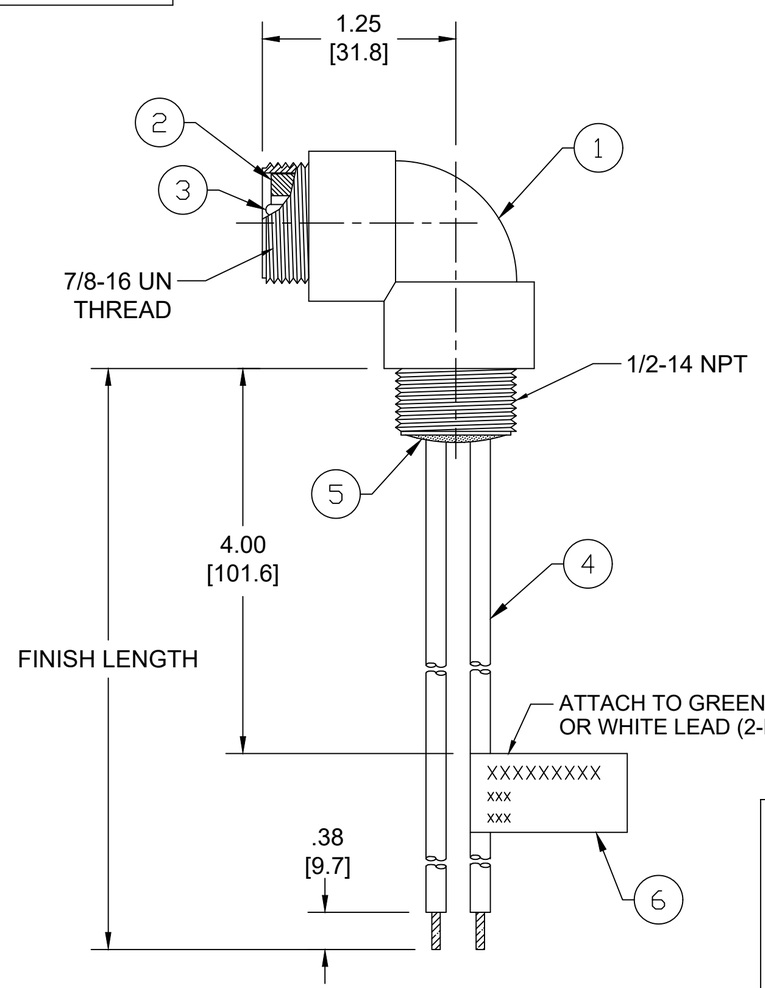

PART NUMBER LEGEND

1R2007A20A120

- POLES 2-6
- FINISHED LENGTH:
  - A120 = 12 INCHES
  - F015 = 1.5 FEET
  - F020 = 2 FEET
  - F100 = 10 FEET

NOTES:
1. MATERIAL: AS NOTED
2. FINISH: AS NOTED
3. ELECTRICAL:
   VOLTAGE: 2P & 3P: 500V PER IEC60664 (B1)
   4P: 483V PER IEC60664
   5P & 6P: 400V PER IEC60664
   600V PER UL2238
   CURRENT: 2P & 3P: 13A
   4P: 10A
   5P & 6P: 8A (B1)
4. TEMP RATING: -20°TO +105°C
5. PROTECTION: IP67 (WHEN MATED)
6. UL RECOGNIZED FILE: E152210
   CSA CERTIFIED FILE: LR6837
7. ALL DIMENSIONS ARE FOR REFERENCE UNLESS TOLERANCED OR NOTED OTHERWISE

WIRE LENGTH TOLERANCES

<.3M [1FT]: +19mm-0 [+.75in-0]
.3 - .9M [1 - 3FT]: +44.5mm-0 [+1.75in-0]
.9 - 1.8M [3 - 6FT]: +55.6mm-0 [+2.19in-0]
1.8 - 3.7M [6 - 12FT: +88.9mm-0 [+3.50in-0]
3.7 - 7.3M [12 - 24FT]: +165.1mm-0 [+6.50in-0]
7.3-14.6M [24 - 48FT]: +317.5mm-0 [+12.50in-0]
14.6 - 30.5M [48-100FT]: +622.3mm-0 [+24.50in-0]
OVER 30M [100FT] +2% OF FINISHED LENGTH

ITEM	DESCRIPTION	MATERIAL	FINISH
6	FLAG LABEL	VINYL	BLACK/YELLOW
5	POTTING MATERIAL	EPOXY	
4	WIRE 16AWG (UL1015)	PVC INSULATION	SEE CHART
3	CONTACT PIN	COPPER ALLOY	GOLD OVER NICKEL
2	MALE INSERT	TPE	YELLOW
1	RECEPTACLE SHELL	ZINC DIE-CAST	BLACK E-COAT

THIS DRAWING CONTAINS INFORMATION THAT IS PROPRIETARY TO MOLEX ELECTRONIC TECHNOLOGIES, LLC AND SHOULD NOT BE USED WITHOUT WRITTEN PERMISSION

FUNCTIONAL SYMBOLS: FA=0, FC=0, FP=0
DIVISIONAL SYMBOLS

DIMENSION UNITS: INCH/MM
SCALE: NTS
GENERAL TOLERANCES (UNLESS SPECIFIED)

	mm	INCH
4 PLACES	±----	±----
3 PLACES	±----	±----
2 PLACES	±----	±----
1 PLACE	±----	±----
0 PLACES	±----	±----
ANGULAR TOL ±	---- °	

DRAFT WHERE APPLICABLE MUST REMAIN WITHIN DIMENSIONS

CURRENT REV DESC: 2P VOLTAGE WAS 600V. MODIFIED TEMP RATING & PN TABLE. ADDED WIRE STRIP END.

EC NO: 709714
DRWN: ABENJAMINLW 2022/02/18
CHK'D: RSTONE 2022/06/08
APPR: BWOODMAN 2022/06/14

INITIAL REVISION:
DRWN: RSTONE 2019/03/27
APPR: BWOODMAN 2019/03/30

molex

MINI-CHANGE RECEPTACLE, A SIZE
2-6 POLE, MALE, 90DEG, SINGLE KEY,
#16 AWG

PRODUCT CUSTOMER DRAWING

DOCUMENT NUMBER	DOC TYPE	DOC PART	REVISION
SD-130013-090	PSD	001	B1

THIRD ANGLE PROJECTION | DRAWING: C-SIZE | SERIES: 130013 | MATERIAL NUMBER: SEE CHART | CUSTOMER: GENERAL MARKET | SHEET NUMBER: 1 OF 1

DOCUMENT STATUS	P1	RELEASE DATE	2022/06/14 13:48:37

FORMAT: IN-ACAD-tb-prod-C
REVISION: B
DATE: 2020/01/14