RoHS compliant
by exemption

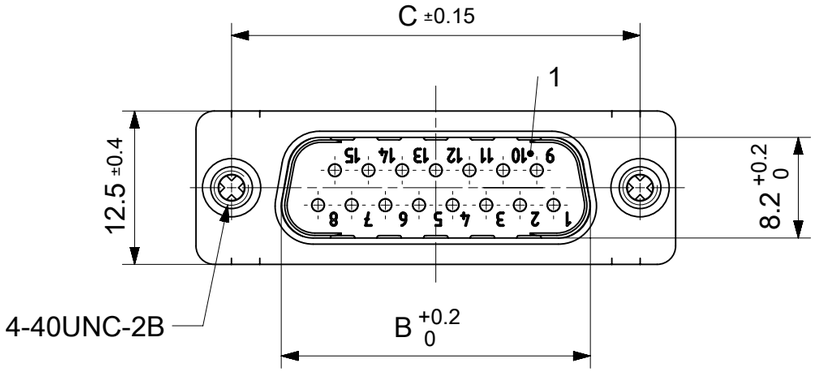

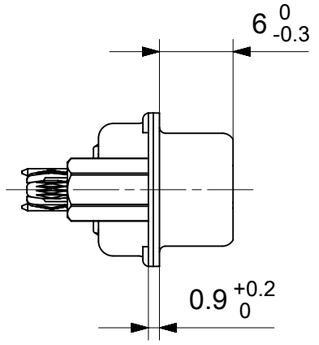

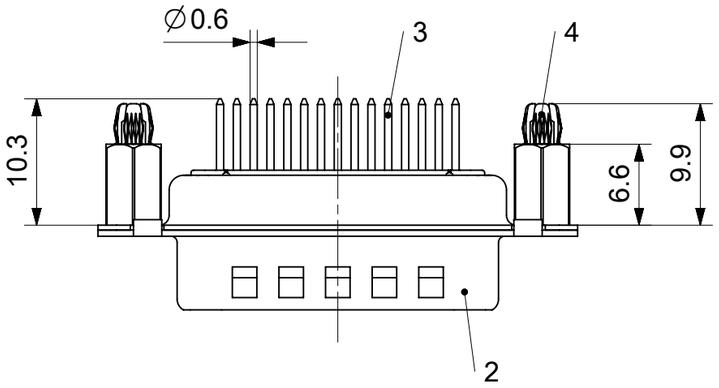

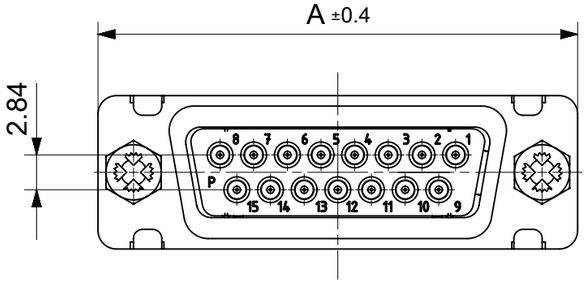

FCT Part number:
Fxx*1)P1*2)-0982
e.g. F15P1G1-0982
*1) xx No. of contacts 09, 15, 25 or 37
*2) y for performance classes 1, 2 or 3
(contact cycle for G1/G2/G3 = 500/200/50)

Material Number	xx*1)	y*2)	A[mm]	B[mm]	C[mm]	*E[mm]	*F[mm]
1731090075	09	G1	30.8	16.9	25	∅1	∅3
1731090146		G2					
1731090141	15	G1	39.1	25.2	33.3		
1731090147		G2					
1731090076	25	G1	53	38.9	47.04		
1731090148		G2					
1731090142	37	G1	69.3	55.3	63.5		
1731090149		G2					

*PCB hole patterns ∅E, ∅F see document 2195600023

No.	Pc.	Part	Type Description/Material	Surface plating/ Color/Class
4	2	Snap-in bolt	PCB 1.6mm / Brass	tin plated
3	xx	Signal contact	P1 / Brass	G1 / G2
2	1	Shell	Steel	tin plated
1	1	Insulator	PBT (-55°C to +125°C) acc. UL94V-0	white

MEASUREMENTS WITHOUT TOLERANCE ACC TO ISO 2768-m

REPLACEMENT FOR DOCUMENT NUMBER: FxxP1Gy-0982

THIS DRAWING CONTAINS INFORMATION THAT IS PROPRIETARY TO MOLEX ELECTRONIC TECHNOLOGIES, LLC AND SHOULD NOT BE USED WITHOUT WRITTEN PERMISSION

FUNCTIONAL SYMBOLS
FA = 0
FC = 0
FP = 0

DIVISIONAL SYMBOLS

DIMENSION UNITS: mm
SCALE: 2:1

GENERAL TOLERANCES (UNLESS SPECIFIED)

ANGULAR TOL	± °
4 PLACES	±
3 PLACES	±
2 PLACES	±
1 PLACE	±
0 PLACES	±

DRAFT WHERE APPLICABLE MUST REMAIN WITHIN DIMENSIONS

CURRENT REV DESC:

EC NO: 706086
DRWN: SKANDB 2021/11/25
CHK'D: MTEUBEL 2022/05/11
APPR: MTEUBEL 2022/05/11

INITIAL REVISION:
DRWN: SKANDB 2021/11/25
APPR: MTEUBEL 2022/05/11

FIRST ANGLE PROJECTION | DRAWING: A3-SIZE | SERIES: 173109

molex

FCT D-SUB MINIATURE CONNECTOR

PRODUCT CUSTOMER DRAWING

DOCUMENT NUMBER	DOC TYPE	DOC PART	REVISION
1731090075	PSD	000	A

MATERIAL NUMBER	CUSTOMER	SHEET NUMBER
SEE TABLE	GENERAL MARKET	1 OF 1

DOCUMENT STATUS	P1	RELEASE DATE	2022/05/11 11:11:25

FORMAT: master_Sheet-A3
REVISION: J1
DATE: 2021/05/07