TABLE OF CONTENTS

SHEET NO.	SHEET DESCRIPTION
1	NOTES, INSPECTION BALLOON NUMBER LOG, NOMINAL DIMENSION RANGE LIST, REV.COLUMN, RECEPTCLE ASSEMBLY LIST, ISOMETRIC VIEW,ISL EXPLODED VIEW, CTX50 TERMINAL LIST,TYCO MCON LIST
2	34&38WAY POLARIZATION OPTION VIEW,
3	POL A&B&C DIFFERENCE WITH UPDATED POL A&B&C VIEW, HB / V0 VERSION DIFFERENCE
4	DETAIL DIMENSION VIEW

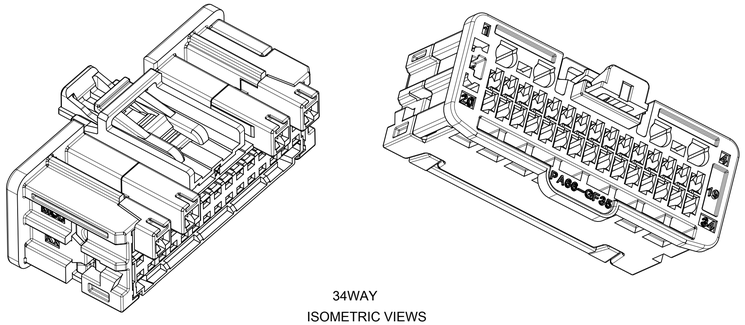

34WAY
ISOMETRIC VIEWS
SCALE 3:1

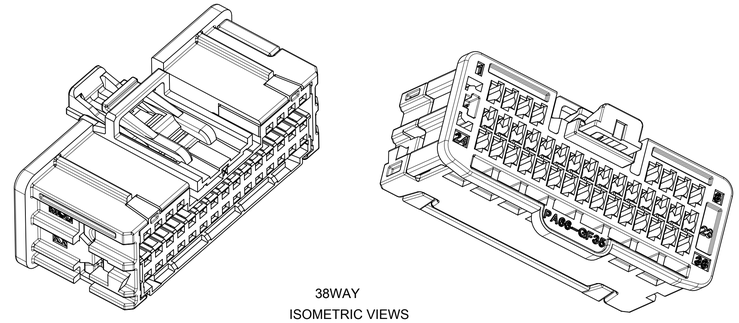

38WAY
ISOMETRIC VIEWS
SCALE 3:1

NOTES: VALID UNLESS OTHERWISE SPECIFIED

1. GENERAL:
   a. APPLICATION SPECIFICATION SEE: AS-34959-001
   b. HB PRODUCT SPECIFICATION SEE: PS-34959-001
   (E) c. V0 PRODUCT SPECIFICATION SEE: 2133550000-PS
(E) 2. DESIGN - MATERIALS:
   a. PLASTIC HSG :
      i. HB RESIN : PA66 GF35
      ii. V0 RESIN: PA66 GF30
   b. ISL:
      i. HB RESIN : PA66 GF50
      ii. V0 RESIN: PA66 GF30
   c. CPA RESIN: PA66 GF50
3. DESIGN - GEOMETRY:
   a. ALL GRAPHIC DATA IS BASIC (NO TOLERANCE) AND MUST BE TAKEN FROM THE DATA FILE AT ITS LATEST REVISION.
   b. PRODUCT DESIGN MODEL NUMBER(S): SEE BOM TABLE ON SHEET 2
   c. GEOMETRIC DIMENSIONS AND TOLERANCES PER ASME Y14.5X-2009
   d. EDGES AND UNDIMENSIONED DETAILS PER ISO13715
   e. CORNERS SHOWN AS SHARP TO BE R 0.2 MAX.
   f. LETTERING SHALL BE 0.15 MAX RAISED IN 0.25 MAX RECESS PAD. THIS INCLUDES RECYCLING CODE, CAVITY ID, VENDOR IDENTIFICATION, AND CUSTOMER MATERIAL NUMBER.
4. DESIGN - MANUFACTURING:
   a. VISUAL DEFECTS SHALL MEET COSMETIC STANDARD PS-45499-002 (Class B)
5. ISL IS SHIPPED IN SEATED POSITION AND MUST BE REMOVOED PRIOR TO TERMINAL INSTALLATION
(E) 6. RECYCLE CODE:
   a. HB RESIN: PA66-GF35
   b. V0 RESIN: PA66-GF30

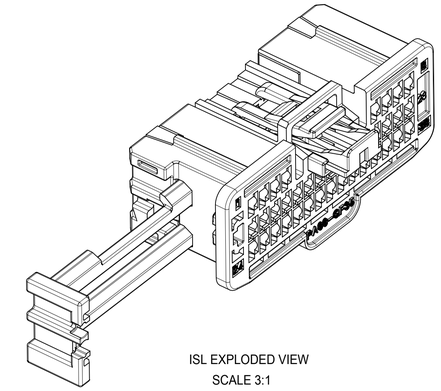

ISL EXPLODED VIEW
SCALE 3:1

(E) MINI50 34&38 WAY RECEPTACLE ASSEMBLY LIST

MOLEX ASSEMBLY PART NO.'S	ASSEMBLY STATUS	FLAMMABILITY UL94	CIRCUIT	POL	COLOR	MATING COMPONENT		STATUS
						VERTICAL HEADER	RIGHT ANGLE HEADER	
34959-0340	WITH CPA	HB	34	A	BLACK	34958-0340	34961-0340	SALEABLE
34959-0341	WITH CPA	HB	34	B	GRAY	34958-0341	34961-0341	SALEABLE
34959-0342	WITH CPA	HB	34	C	DARK GRAY	34958-0342	34961-0342	SALEABLE
34959-0380	WITH CPA	HB	38	A	BLACK	34958-0380	34961-0380	OBSOLETED
34959-0381	WITH CPA	HB	38	B	GRAY	34958-0381	34961-0381	OBSOLETED
34959-0382	WITH CPA	HB	38	C	DARK GRAY	34958-0382	34961-0382	OBSOLETED
34959-0383	WITH CPA	HB	38	UPDATED A	BLACK	34958-0383	34961-0383	SALEABLE
34959-0384	WITH CPA	HB	38	UPDATED B	GRAY	34958-0384	34961-0384	SALEABLE
34959-0385	WITH CPA	HB	38	UPDATED C	DARK GRAY	34958-0385	34961-0385	SALEABLE
34959-0347	\	HB	34	A	BLACK	34958-0340	34961-0340	SALEABLE
34959-0348	\	HB	34	B	GRAY	34958-0341	34961-0341	SALEABLE
34959-0349	\	HB	34	C	DARK GRAY	34958-0342	34961-0342	SALEABLE
34959-0387	\	HB	38	A	BLACK	34958-0380	34961-0380	OBSOLETED
34959-0388	\	HB	38	B	GRAY	34958-0381	34961-0381	OBSOLETED
34959-0389	\	HB	38	C	DARK GRAY	34958-0382	34961-0382	OBSOLETED
34959-0390	\	HB	38	UPDATED A	BLACK	34958-0383	34961-0383	SALEABLE
34959-0391	\	HB	38	UPDATED B	GRAY	34958-0384	34961-0384	SALEABLE
34959-0392	\	HB	38	UPDATED C	DARK GRAY	34958-0385	34961-0385	SALEABLE
2133560340	WITH CPA	V0	34	A	BLACK	2133820340	2133550340	SALEABLE
2133560341	WITH CPA	V0	34	B	GRAY	2133820341	2133550341	SALEABLE
2133560342	WITH CPA	V0	34	C	DARK GRAY	2133820342	2133550342	SALEABLE
2133560343	\	V0	34	A	BLACK	2133820340	2133550340	SALEABLE
2133560344	\	V0	34	B	GRAY	2133820341	2133550341	SALEABLE
2133560345	\	V0	34	C	DARK GRAY	2133820342	2133550342	SALEABLE
2133560380	WITH CPA	V0	38	UPDATED A	BLACK	2133820380	2133550380	SALEABLE
2133560381	WITH CPA	V0	38	UPDATED B	GRAY	2133820381	2133550381	SALEABLE
2133560382	WITH CPA	V0	38	UPDATED C	DARK GRAY	2133820382	2133550382	SALEABLE
2133560383	\	V0	38	UPDATED A	BLACK	2133820380	2133550380	SALEABLE
2133560384	\	V0	38	UPDATED B	GRAY	2133820381	2133550381	SALEABLE
2133560385	\	V0	38	UPDATED C	DARK GRAY	2133820382	2133550382	SALEABLE

CTX50 UNSEALED RECEPTACLE TERMINALS

PART NUMBER		MATERIAL	WIRE GAGE (mm²)	GRIP
D-WIND (LEFT PAYOFF)	B-WIND (RIGHT PAYOFF)			
5600230448	5600230450	COPPER ALLOY	0.35	LARGE
5600230421	5600230423	COPPER ALLOY	0.22	MEDIUM
(E) 5600230444	5600230445	COPPER ALLOY	0.13	SMALL

TYCO MCON UNSEALED RECEPTACLE TERMINALS

PART NUMBER	MATERIAL	WIRE GAGE (mm²)	GRIP
7-1452659	COPPER ALLOY	1.00 mm² or 18 AWG	LARGE
7-1452656	COPPER ALLOY	0.50 - 0.75 mm² or 20 AWG	MEDIUM
7-1452653	COPPER ALLOY	0.35 mm² or 22 AWG	SMALL

REV	REV DESCRIPTION	ECN SAP NO.
E	1. UPDATED MINI50 34&38WAY RECEPTACLE ASSEMBLY LIST IN SHEET 1 2. ADDED V0 PRODUCT SPECIFICATION, MATERIALS INFORMATION AND RECYCLE CODE IN NOTE. 3. ADDED SHEET 2 TO SHOW 34&38WAY POLARIZATION OPTION 4. ADDED SHEET 3 TO SHOW POLA & B & C DIFFERENCE WITH UPDATED POL A & B & C VIEW, AND HB / V0 VERSION DIFFERENCE 5. UPDATED CTX50 SMALL GRIP TERMINAL INFORMATION IN SHEET 1	632993
D1	1. UPDATED POLARIZATION FEATURE FOR 34959-038X (X=3,4,5) AND 34959-039X(X=0,1,2) 2. ADDED CIRCUIT NUMBER FOR MIDDLE ROW ON SHEET 3. 3. ADDED DIM 1A.	607356
D	ADDED NEW VIEW OF UPDATED POL A & B & C,SEE SHEET 1. ADDED NEW P/N: 34959-0383 \ 34959-0384 \ 34959-0385 34959-0390\34959-0391\34959-0392 IN THE BOM ON SHEET 2. ADDED PRODUCT STATUS IN THE BOM ON SHEET 2. POL A&B&C DIFFERENCE WITH UPDATED POL A&B&C: ONLY REMOVED THE RIB FEATURE BESIDES LOCK LATCH ,SEE SHEET 4.	10877382

DIN 16901	CODE LETTER	NOMINAL DIMENSION RANGE													
		OVER	0	1	3	6	10	15	22	30	40	53	70	90	120
		UP TO	1	3	6	10	15	22	30	40	53	70	90	120	160
PRECISION ENGINEERING	A		±0.10	±0.12	±0.14	±0.16	±0.20	±0.22	±0.24	±0.26	±0.28	±0.31	±0.35	±0.40	±0.50
	B		±0.05	±0.06	±0.07	±0.08	±0.10	±0.12	±0.14	±0.16	±0.18	±0.21	±0.25	±0.30	±0.40
A: FOR NON-MOLD RELATED DIMENSIONS (ACROSS PARTING LINE)															
B: FOR MOLD RELATED DIMENSIONS (WITHIN MOLD COMPONENTS)															

INSPECTION BALLOON NUMBER LOG

PER DRAWING REVISION: E

LAST BALLOON NUMBER USED: 4

ADDED BALLOON NUMBERS:

REMOVED BALLOON NUMBERS:

THIS DRAWING CONTAINS INFORMATION THAT IS PROPRIETARY TO MOLEX ELECTRONIC TECHNOLOGIES, LLC AND SHOULD NOT BE USED WITHOUT WRITTEN PERMISSION

FUNCTIONAL SYMBOLS: FA = 0, FC = 0, FP = 0
DIVISIONAL SYMBOLS

DIMENSION UNITS: mm
SCALE: 5:1
GENERAL TOLERANCES (UNLESS SPECIFIED)
ANGULAR TOL ± °
4 PLACES ±
3 PLACES ±
2 PLACES ±
1 PLACE ±
0 PLACES ±
DRAFT WHERE APPLICABLE MUST REMAIN WITHIN DIMENSIONS

CURRENT REV DESC: OBSOLETE PART NUMBER

EC NO: 632993
DRWN: AKUMAR19 2019/04/01
CHK'D: CDZHANG 2020/10/22
APPR: CDZHANG 2020/10/22
INITIAL REVISION:
DRWN: JFISCHER01 2012/08/17
APPR: SMARCEAU 2012/08/21

THIRD ANGLE PROJECTION
DRAWING: D-SIZE
SERIES: 34959

molex

34/38 WAY MINI50 FEMALE RECEPTACLE ASSEMBLY SALES DRAWING

PRODUCT CUSTOMER DRAWING

DOCUMENT NUMBER	DOC TYPE	DOC PART	REVISION
SD-34959-030	PSD	001	E

MATERIAL NUMBER
CUSTOMER: GENERAL MARKET
SHEET NUMBER: 1 OF 4

DOCUMENT STATUS	P1	RELEASE DATE	2020/10/22 09:37:03

TABLE OF CONTENTS

SHEET NO.	SHEET DESCRIPTION
2	34&38WAY POLARIZATION OPTION VIEW,

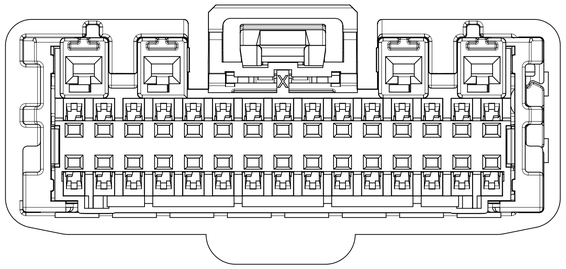

34 WAY POLARIZATION OPTION 'A'

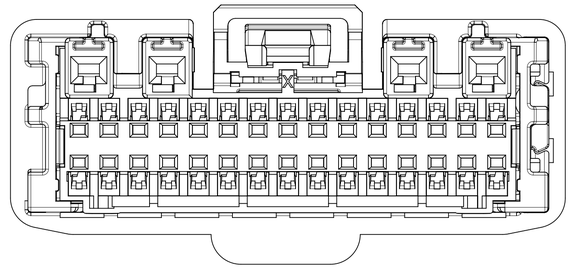

34 WAY POLARIZATION OPTION 'B'

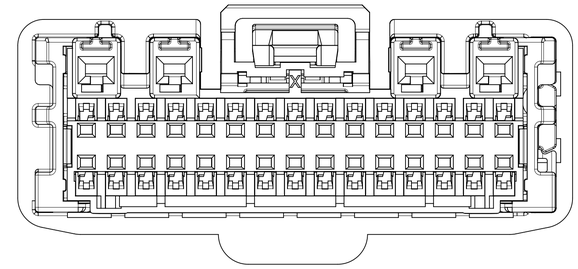

34 WAY POLARIZATION OPTION 'C'

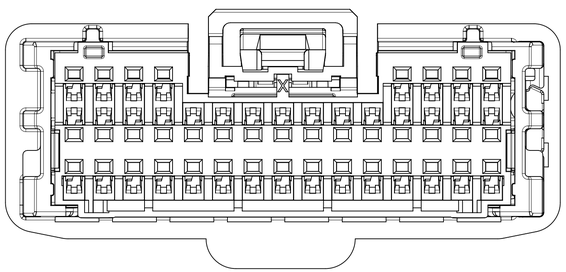

38 WAY POLARIZATION OPTION 'A'

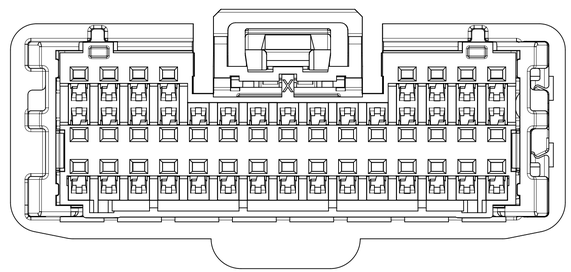

38 WAY POLARIZATION OPTION 'B'

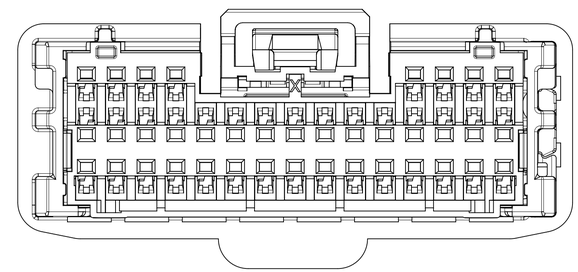

38 WAY POLARIZATION OPTION 'C'

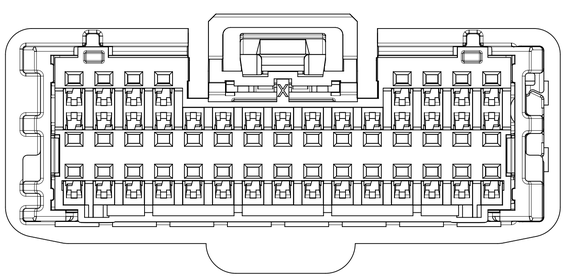

38 WAY POLARIZATION OPTION 'UPDATED A'

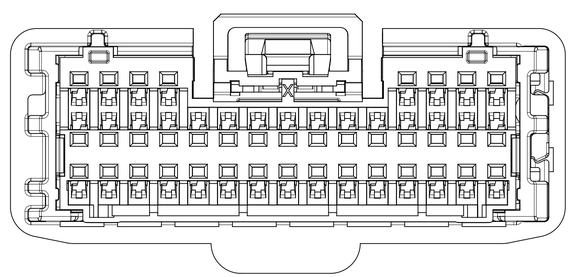

38 WAY POLARIZATION OPTION 'UPDATED B'

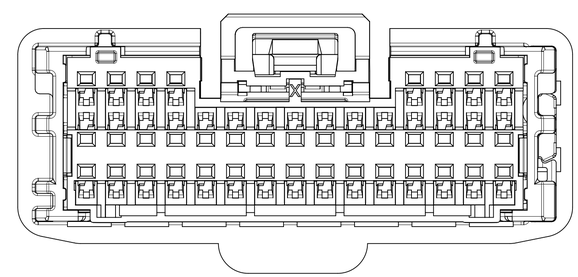

38 WAY POLARIZATIONOPTION 'UPDATED C'

SYMBOLS	
= 0	
= 0	
= 0	
= 0	
= 0	
= 0	
= 0	
= 0	
= 0	

THIS DRAWING CONTAINS INFORMATION THAT IS PROPRIETARY TO MOLEX ELECTRONIC TECHNOLOGIES, LLC AND SHOULD NOT BE USED WITHOUT WRITTEN PERMISSION

DIMENSION UNITS	SCALE
mm	5:1

GENERAL TOLERANCES (UNLESS SPECIFIED)

ANGULAR TOL	± °
4 PLACES	±
3 PLACES	±
2 PLACES	±
1 PLACE	±
0 PLACES	±

DRAFT WHERE APPLICABLE MUST REMAIN WITHIN DIMENSIONS

CURRENT REV DESC: OBSOLETE PART NUMBER

EC NO: 632993
DRWN: AKUMAR19 2019/04/01
CHK'D: CDZHANG 2020/10/22
APPR: CDZHANG 2020/10/22

INITIAL REVISION:
DRWN: JFISCHER01 2012/08/17
APPR: SMARCEAU 2012/08/21

THIRD ANGLE PROJECTION | DRAWING: D-SIZE | SERIES: 34959

molex

34/38 WAY MINI50 FEMALE
RECEPTACLE ASSEMBLY SALES DRAWING

PRODUCT CUSTOMER DRAWING

DOCUMENT NUMBER	DOC TYPE	DOC PART	REVISION
SD-34959-030	PSD	001	E

MATERIAL NUMBER	CUSTOMER	SHEET NUMBER
	GENERAL MARKET	2 OF 4

DOCUMENT STATUS	P1	RELEASE DATE	2020/10/22 09:37:03

TABLE OF CONTENTS	
SHEET NO.	SHEET DESCRIPTION
3	POL A&B&C DIFFERENCE WITH UPDATED POL A&B&C VIEW; HB / V0 VERSION DIFFERENCE

POL A&B&C DIFFERENCE WITH UPDATED POL A&B&C VIEW:

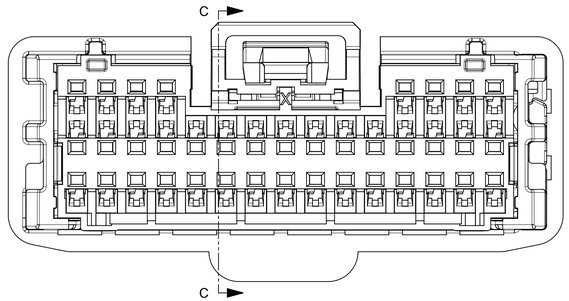

38 WAY POLARIZATION

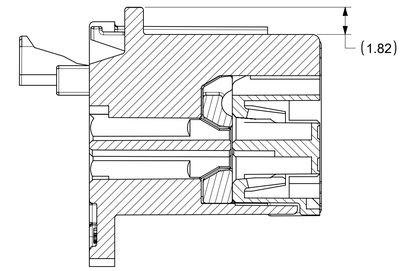

SECTION C-C

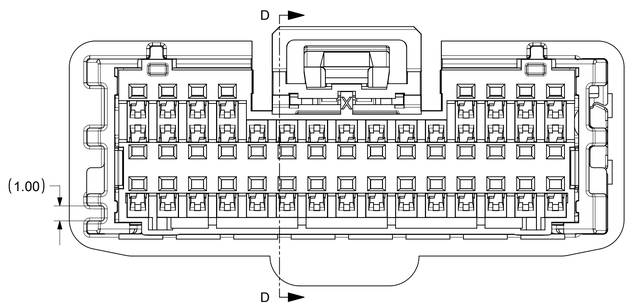

38 WAY UPDATED POLARIZATION

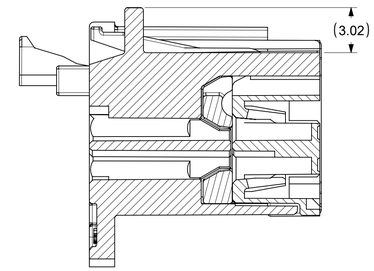

SECTION D-D

(E) HB / V0 VERSION DIFFERENCE

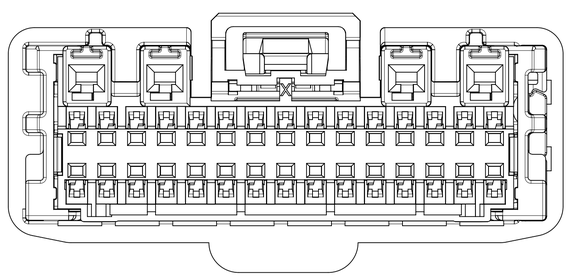

HB P/Ns: 34959XXXX
APPLIES TO ALL CKT SIZES, USE 34CKT AS SHOWN

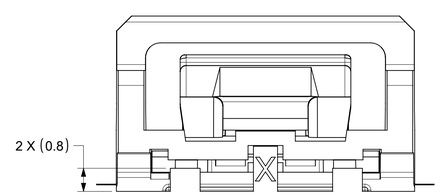

DETAIL E
SCALE 10:1

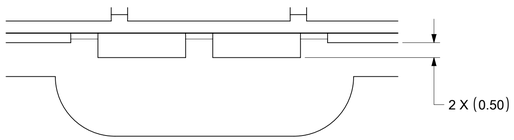

DETAIL F
SCALE 10:1

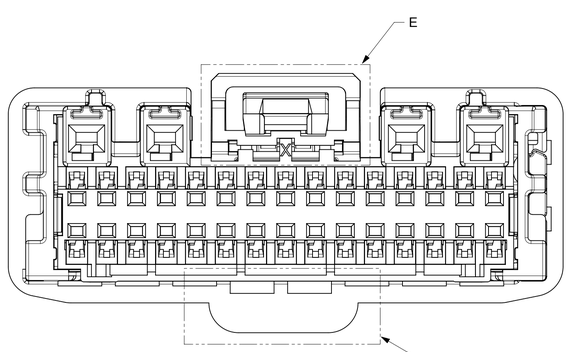

V0 P/Ns: 213356XXXX
APPLIES TO ALL CKT SIZES, USE 34CKT AS SHOWN

SYMBOLS	
= 0	
= 0	
= 0	
= 0	
= 0	
= 0	
= 0	
= 0	

THIS DRAWING CONTAINS INFORMATION THAT IS PROPRIETARY TO MOLEX ELECTRONIC TECHNOLOGIES, LLC AND SHOULD NOT BE USED WITHOUT WRITTEN PERMISSION

DIMENSION UNITS	SCALE
mm	5:1

GENERAL TOLERANCES (UNLESS SPECIFIED)

ANGULAR TOL	± °
4 PLACES	±
3 PLACES	±
2 PLACES	±
1 PLACE	±
0 PLACES	±

DRAFT WHERE APPLICABLE MUST REMAIN WITHIN DIMENSIONS

CURRENT REV DESC: OBSOLETE PART NUMBER

EC NO: 632993
DRWN: AKUMAR19 2019/04/01
CHK'D: CDZHANG 2020/10/22
APPR: CDZHANG 2020/10/22

INITIAL REVISION:
DRWN: JFISCHER01 2012/08/17
APPR: SMARCEAU 2012/08/21

THIRD ANGLE PROJECTION | DRAWING: D-SIZE | SERIES: 34959

molex

34/38 WAY MINI50 FEMALE
RECEPTACLE ASSEMBLY SALES DRAWING

PRODUCT CUSTOMER DRAWING

DOCUMENT NUMBER	DOC TYPE	DOC PART	REVISION
SD-34959-030	PSD	001	E

MATERIAL NUMBER	CUSTOMER	SHEET NUMBER
	GENERAL MARKET	3 OF 4

DOCUMENT STATUS	P1	RELEASE DATE	2020/10/22 09:37:03

TABLE OF CONTENTS	
SHEET NO.	SHEET DESCRIPTION
4	DETAIL DIMENSION VIEW

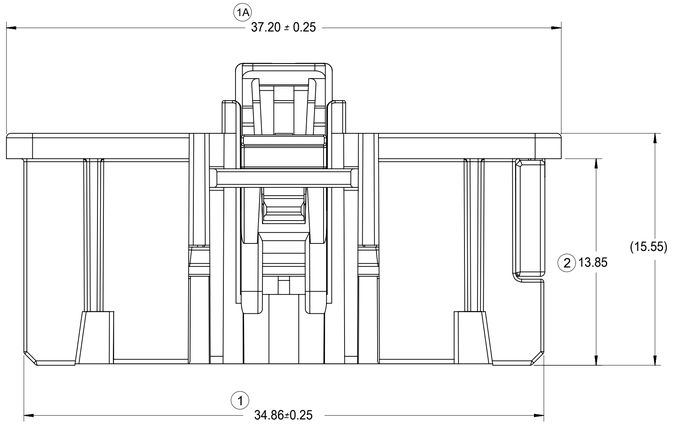

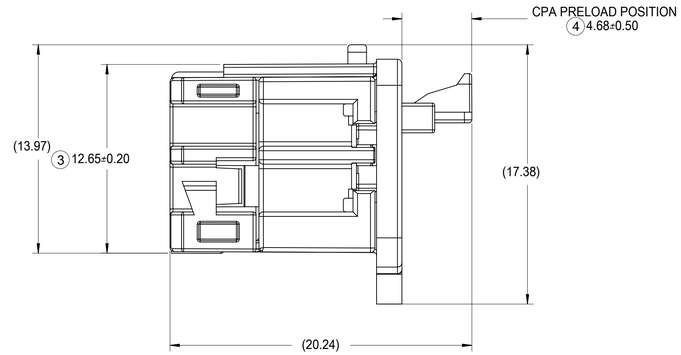

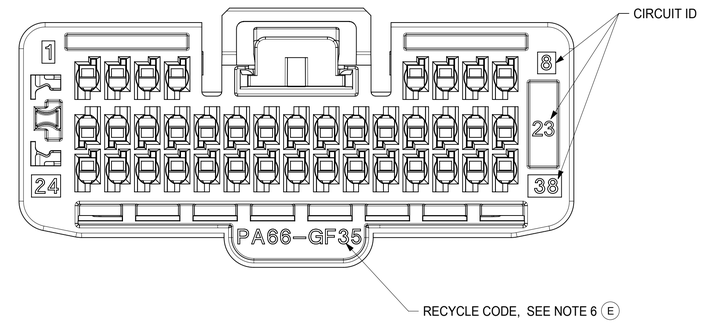

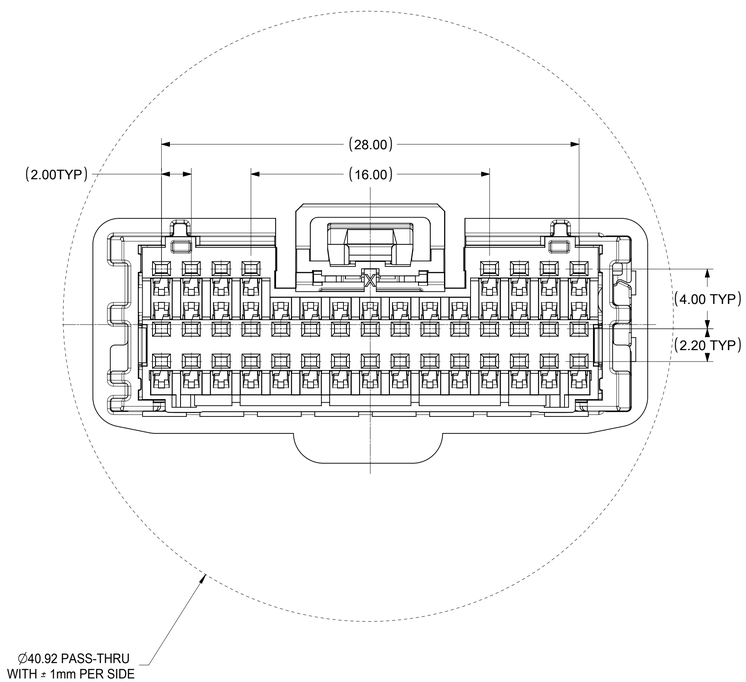

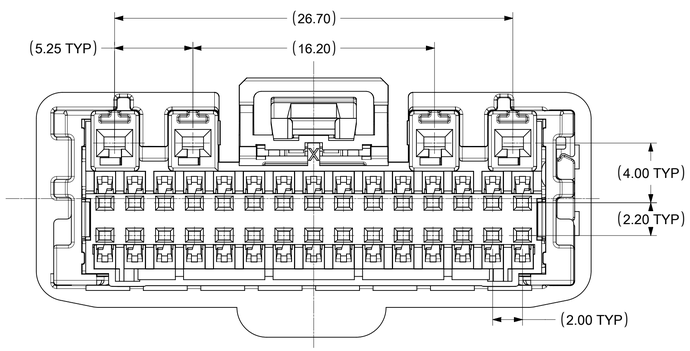

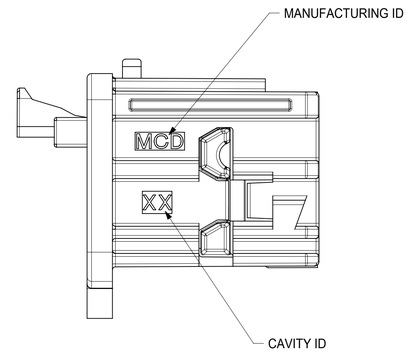

SYMBOLS	
E A = 0	
E C = 0	
E D = 0	
S = 0	
= 0	
C = 0	
= 0	
= 0	
= 0	

DIMENSION UNITS	SCALE
mm	5:1
GENERAL TOLERANCES (UNLESS SPECIFIED)	
ANGULAR TOL ± °	
4 PLACES	±
3 PLACES	±
2 PLACES	±
1 PLACE	±
0 PLACES	±
DRAFT WHERE APPLICABLE MUST REMAIN WITHIN DIMENSIONS	

THIS DRAWING CONTAINS INFORMATION THAT IS PROPRIETARY TO MOLEX ELECTRONIC TECHNOLOGIES, LLC AND SHOULD NOT BE USED WITHOUT WRITTEN PERMISSION

CURRENT REV DESC: OBSOLETE PART NUMBER

EC NO: 632993
DRWN: AKUMAR19 2019/04/01
CHK'D: CDZHANG 2020/10/22
APPR: CDZHANG 2020/10/22

INITIAL REVISION:
DRWN: JFISCHER01 2012/08/17
APPR: SMARCEAU 2012/08/21

THIRD ANGLE PROJECTION | DRAWING: D-SIZE | SERIES: 34959

molex

34/38 WAY MINI50 FEMALE
RECEPTACLE ASSEMBLY SALES DRAWING

PRODUCT CUSTOMER DRAWING

DOCUMENT NUMBER	DOC TYPE	DOC PART	REVISION
SD-34959-030	PSD	001	E

MATERIAL NUMBER	CUSTOMER	SHEET NUMBER
	GENERAL MARKET	4 OF 4

DOCUMENT STATUS	P1	RELEASE DATE	2020/10/22 09:37:03

TEMPLATE: 1000000-001-01-01
REVISION: H
DATE: 2016/01/19